FLIR

User Manual

Four-Way Articulating Camera Probe

Model VS80A4-60–2RM

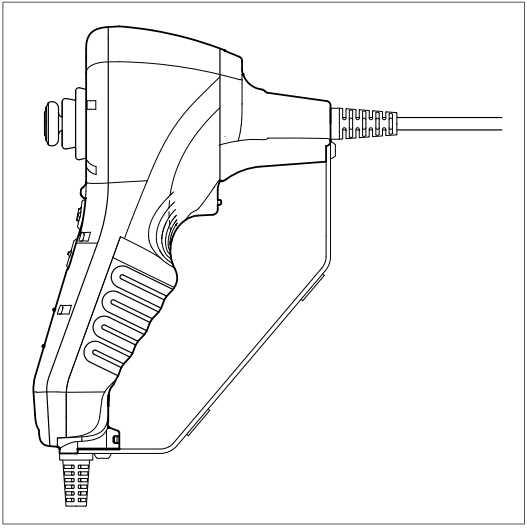

Introduction

Thank you for selecting the FLIR four-way articulating probe. The probe is intended for use with the VS80 High Performance Videoscope. See the VS80 manual for complete instructions for image and video management, image manipulation, Wi-Fi connectivity, split-screen modes, and other features. Obtain the VS80 user manual and additional translations of this user manual on the support site:

https://support.flir.com

Product Description

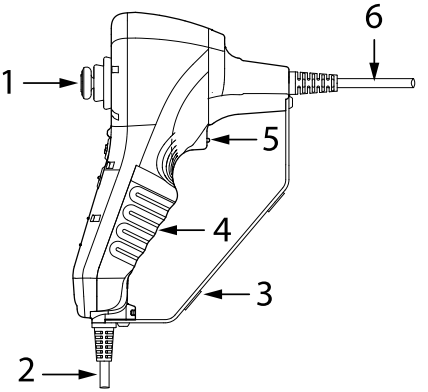

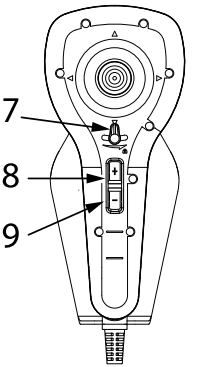

1. Joystick articulation control
2. VS80 connecting cable
3. Control stabilizer
4. Hand grip
5. Lighting enhancement button
6. Probe
7. Articulation locking switch
8. Increase brightness
9. Decrease brightness

Safety

Safety Note

Please read and understand all safety cautions before use.

⚠ **CAUTION**
Do not insert the probe into flammable liquid or gas. This product is designed for industrial use only. It is not intended for use in human or other biological inspection.

⚠ **CAUTION**
To clean the probe, wipe with a soft cloth dampened with a mild detergent and clean water. Do not use abrasive detergents, corrosives (alcohol), or solvents to clean the probe. Use a high quality lens cleaning fluid and a lint-free swab to clean the camera and worklight lenses. Do not disassemble the product, damage to the product and electrical shock may occur. Avoid direct sun exposure. Store in a cool, dry, and well-ventilated area.

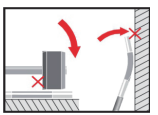	The probe contains sensitive circuitry that controls the optics and electronics of the camera. Do not strike the probe or allow it to impact objects forcefully.
	The following liquids have been approved for submersion of the camera probe: Brake and transmission fluid, diesel fuel, unleaded gasoline, engine oil, and CPC hydraulic fluid (46AWS).

Connect the Probe to the VS80

Carefully connect the probe to the VS80 monitor as detailed below. Always switch the VS80 power off before connecting the probe.

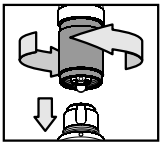

1. Align the white dot on the probe connector with the white dot on the VS80 monitor connector.
2. Plug the probe into the monitor unit, ensuring proper alignment and full insertion.
3. Tighten the collar nut to secure the connection. Do not overtighten.

Probe Controls

Articulation Joystick

Use the joystick (1) to move the probe neck in four directions as shown in the illustration below. The thumb is typically used to move the joystick while the hand grips the control unit. Set the control unit's stabilizing base on a firm platform for convenience.

Move the probe slowly and carefully; stop moving in a specific direction if resistance is detected. Keep the probe as straight as possible and keep the probe neck at 0° articulation when moving into and out of an inspection area.



Articulation Lock

Move the locking switch (7) to the locked position (to the right), to freeze the probe neck in place. Move the switch to the left to release the lock. Do not lock the probe neck at an angle when inserting or removing the probe from the inspection area, this can bind the probe in the inspection area.

Light Enhancement Button

Press the light enhancement button (5) to highlight the darker areas of a camera image.

Brightness Buttons

Short press brightness (+) button (8) to increase brightness. Short press brightness (-) button (9) to decrease brightness.

VS80 Controls

The VS80 offers touch-screen and physical control buttons that add more capabilities to your camera probe. Download the VS80 user manual from the FLIR support site for complete details on recording and managing still images and video, Wi-Fi connectivity, split-screen views, additional rotation angles, and more. See the Support section below for the support web address.

Mirror Accessories

The mirror adaptors optimize side view and forward view camera images. Use the VS80 touch-screen to switch the views and work-lights as detailed in the VS80 user manual.

Notes: Peel off the protective film from the mirror before use. Clean the mirror with a lint-free swab and a high quality lens cleaner. If necessary, remove dust and moisture with compressed air.

Dual View Mirror Description



1. Reflective mirror
2. Worklight lens opening
3. Worklight aligned with opening
4. Threaded probe connection
5. Probe's forward view
6. Probe's side view mirror reflection

Side View 70° Mirror Description

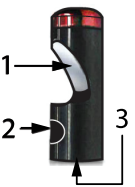

1. Reflective mirror provides side view
2. Worklight opening. Align the worklight with the opening
3. Threaded probe connection

Mirror Accessories Installation

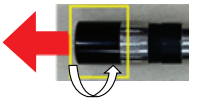	Remove the camera protective cover by rotating it counter-clockwise.
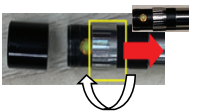	Turn the silver alignment sleeve clockwise to move to the right, exposing the worklight.
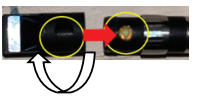	Attach the accessory by rotating it clockwise onto the probe. Align the hole on the accessory to expose the worklight.
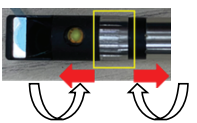	Rotate the silver alignment sleeve to move left or right, as needed.

Measurement Considerations

- Ensure that the camera lens cap is removed before inserting the probe into the inspection area.
- After connecting the probe to the VS80, verify that a clear camera image is displayed. If not, remove the probe and reattach it ensuring correct orientation and a tight seal. Contact FLIR support if necessary.
- Do not force the probe through an inspection area if resistance is detected. Check the nature of the resistance and clear it as necessary before continuing.
- Use the VS80 to capture and manipulate still images and video, select forward and side camera views, control the worklights, connect with smart devices, and other features.
- When the inspection is complete, remove the probe from the inspection area. To avoid probe binding in the inspection area, keep the probe straight and a 0° probe neck articulation angle.
- Clean the probe with a damp cloth and mild detergent as needed. Clean the camera, mirror, and worklight lenses using a high quality cleaning fluid and lint-free swabs.
- Attach the protective lens cap when storing.

- Coil the probe carefully with as wide an arc as is possible when fitting into its protective case.

Specifications

Camera Specifications

Camera image resolution	640 * 480 pixels
Frame rate	30 frames per second (fps)
Camera accessories	Side view and dual view mirror attachments
Probe head and probe body diameter	0.24 in (6 mm)
Probe head length	0.93 in (23.5 mm)
Probe length	6.6 ft (2 m)
Articulation	Four–way articulation with 110° max. angle
Probe head material	Stainless steel
Probe body material	Stainless steel mesh
Worklights	Front (3) and side (2) LED lamps
Field of View (FOV)	87.1°
Depth of Field (DOF)	0.4 to 4.0 in (1 cm to 10 cm)
Operating temperature	32°F to 120°F (0°C to 60°C)
Storage temperature	14°F to 120°F (-10°C to 60°C)
Approved liquids for probe immersion	Brake and transmission fluid, diesel fuel, unleaded gasoline, engine oil, CPC hydraulic fluid (46AWS), and water.
Ingress protection	Probe tip and body: IP 67 (IEC 60529) Protected from submersion in water up to 3.3 ft (1 m) for 30 minutes maximum. In use: rain, splashes, and accidental submersion

Warranty and Support

Three-Year Limited Warranty

This product is protected by FLIR's 3-Year Limited Warranty. Visit www.flir.com/testwarranty to read the 3-Year Limited Warranty document.

CUSTOMER SUPPORT

Customer Support Telephone List	https://support.flir.com/contact
Repair, Calibration, and Technical Support	https://support.flir.com

User Manual

Website
http://www.flir.com

Customer support
http://support.flir.com

Copyright
© 2022, FLIR Systems, Inc. All rights reserved worldwide.

Disclaimer
Specifications subject to change without further notice. Models and accessories subject to regional market considerations. License procedures may apply. Products described herein may be subject to US Export Regulations. Please refer to exportquestions@flir.com with any questions.

Publ. No.: NAS100104
Release: AC
Commit: 87072
Head: 87072
Language: en-US
Modified: 2022-09-16
Formatted: 2022-09-16