AC-GRB



Sportsman

Mount

for GoPro

REVO®

Thank you for choosing Revo.

The Revo AC-GRB Sportsman Mount attaches a GoPro camera, or any action camera with a 3-pronged mount, to a gun barrel, fishing rod, or bow with a 0.9-inch maximum diameter. Sturdy ABS plastic construction and a tilt adjustment outfitted with rosettes assure a steady and secure mount for any outdoor activity.

Precautions

- Make sure your hunting equipment (including any firearm or bow of any kind) is not loaded before mounting, adjusting, or removing the Sportsman Mount.
- Treat every firearm as if it's loaded. Never assume a firearm is unloaded.
- Don't rely on your firearm's safety.
- Follow the firearm manufacturer's operating, servicing, and safety instructions.
- Mount users are solely responsible for safe use of their firearms.
- Always point your firearm in a safe direction.
- Do not attach or use the Sportsman Mount if the barrel of the firearm is too hot to touch.
- Do not allow the mount to interfere with the operation of the trigger, safety, or other mechanisms of your firearm.
- Comply with any state, local, or record book regulations that restrict mounting any electronics, including cameras, to your hunting equipment.
- All images are for illustrative purposes only.

Overview

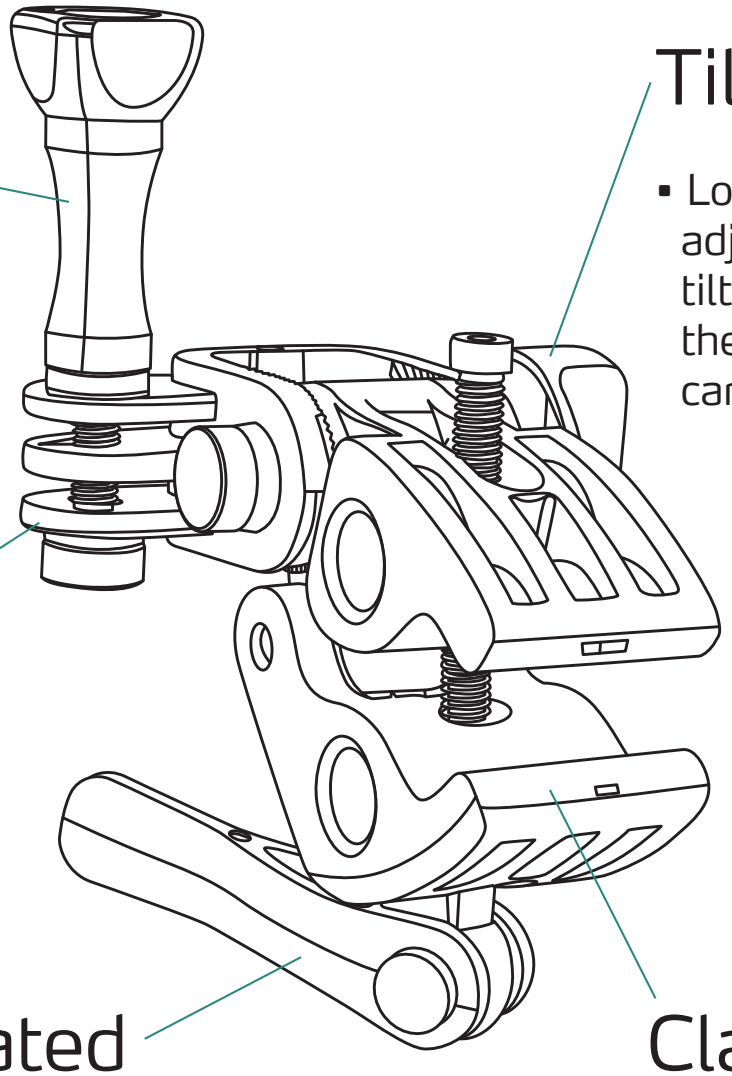

Thumbscrew

- Remove the thumbscrew, and insert the camera into the 3-prong mount. Thread the thumbscrew through the aligned holes, and tighten until secure.

Tilt knob

- Loosen the knob to adjust the camera's tilt angle. Tighten the knob to fix the camera in place.

GoPro 3-prong mount

Articulated locking lever

- Tighten the clamp around the barrel or bow. For wood or carbon-fiber bows and fishing rods, do not overtighten the clamp.

Clamp

- Fits tubes with 0.4 to 0.9 in. diameters.

Specifications

Material: ABS Plastic

Dimensions (L × W × D): 2.8 × 2.75 × 2.4 in.
(72 × 70 × 60 mm)

Clamp Range: 0.4 to 0.9 in. (10.2 to 22.9 mm)

Weight: 3.5 oz. (99.2 g)

One-Year Limited Warranty

This Revo product is warranted to the original purchaser to be free from defects in materials and workmanship under normal consumer use for a period of one (1) year from the original purchase date or thirty (30) days after replacement, whichever occurs later. The warranty provider's responsibility with respect to this limited warranty shall be limited solely to repair or replacement, at the provider's discretion, of any product that fails during normal use of this product in its intended manner and in its intended environment. Inoperability of the product or part(s) shall be determined by the warranty provider. If the product has been discontinued, the warranty provider reserves the right to replace it with a model of equivalent quality and function.

This warranty does not cover damage or defect caused by misuse, neglect, accident, alteration, abuse, improper installation or maintenance. EXCEPT AS PROVIDED HEREIN, THE WARRANTY PROVIDER MAKES NEITHER ANY EXPRESS WARRANTIES NOR ANY IMPLIED WARRANTIES, INCLUDING BUT NOT LIMITED TO ANY IMPLIED WARRANTY OF MERCHANTABILITY OR FITNESS FOR A PARTICULAR PURPOSE. This warranty provides you with specific legal rights, and you may also have additional rights that vary from state to state.

To obtain warranty coverage, contact the Revo Customer Service Department to obtain a return merchandise authorization ("RMA") number, and return the defective product to Revo along with the RMA number and proof of purchase. Shipment of the defective product is at the purchaser's own risk and expense.

For more information or to arrange service, visit www.revocinegear.com or call Customer Service at 212-594-2353.

REVO®
A **Gradus Group** Brand

Revo is a registered trademark of the Gradus Group.
© 2022 Gradus Group LLC. All Rights Reserved.

Product warranty provided by the Gradus Group.
www.gradusgroup.com

GG1