GABOR®

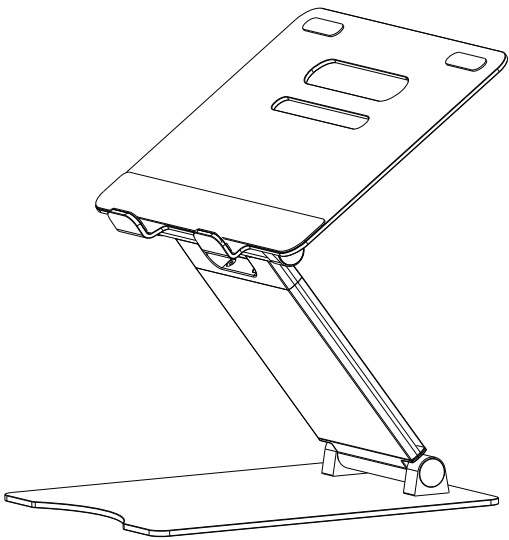

LTS-50/ LAPTOP RISING FLEX STAND

User Manual

Thank you for choosing Gabor.

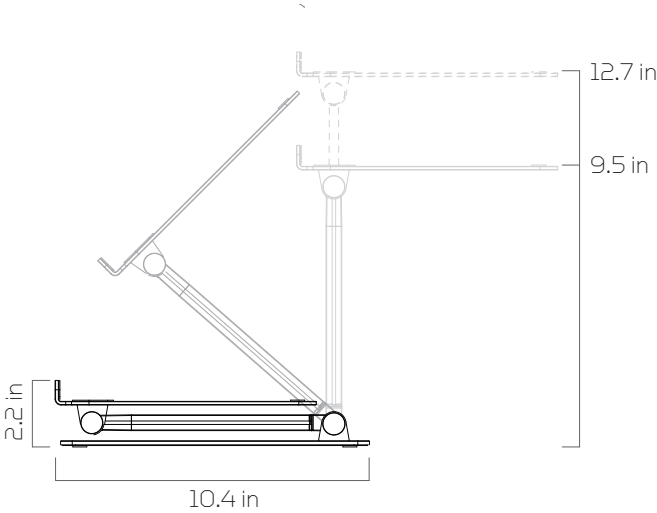

Height: 9.5 to 12.7 in. (24.1 to 32.3 cm)
Collapsed Height: 2.2 in. (5.6 cm)

Specifications

Load Capacity: 11 lb. (5 kg)
Compatibility: 10 to 17 in. laptops

Parts List

3/8 in. (10 mm)
Hex wrench



Using the Stand

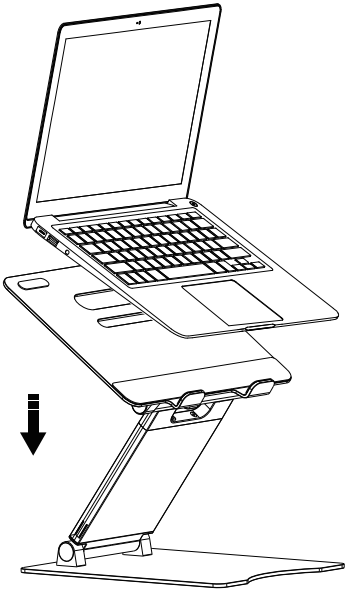

The LTS-50 is compatible with 10- to 17-inch laptops and tablets.

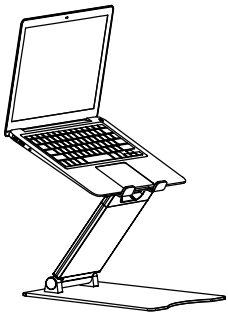

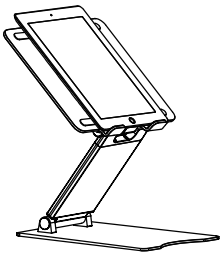

Angle Adjustment

Full Range of Motion

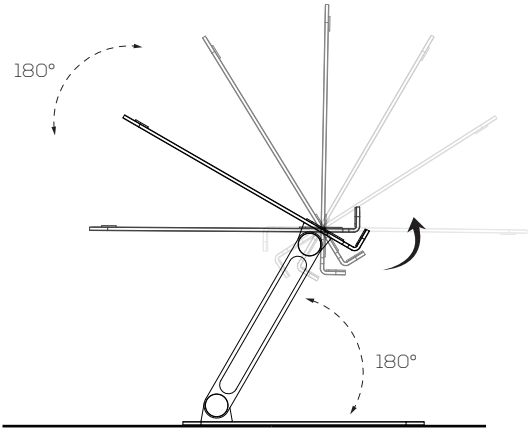

Recommended Usage

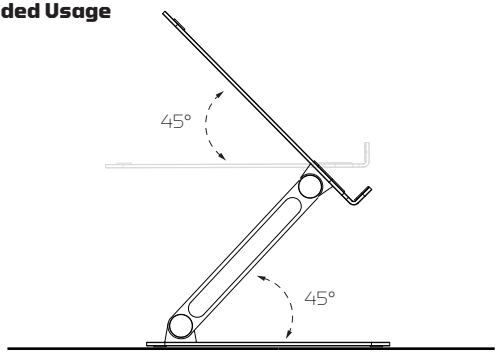

Note:

The images show the stand's maximum extended angles to safely use your device.

Height Adjustment

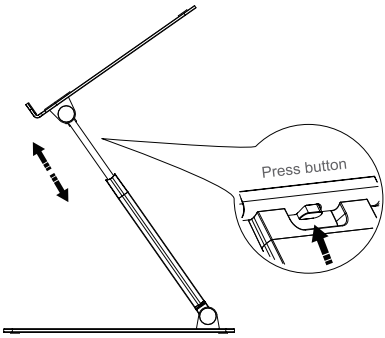

Tension Adjustment

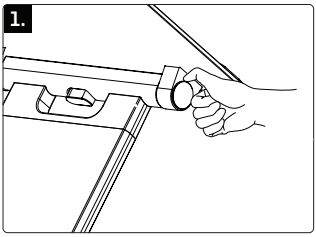

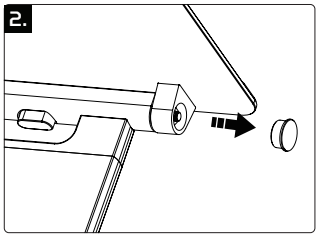

Remove the rubber caps to access the tension screws.

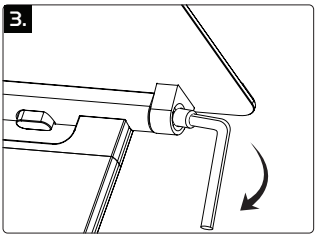

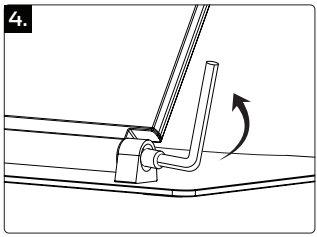

Use the included wrench to adjust the tension.
Rotate clockwise to tighten, and counterclockwise to loosen.

One-Year Limited Warranty

This Gabor product is warranted to the original purchaser to be free from defects in materials and workmanship under normal consumer use for a period of one (1) year from the original purchase date or thirty (30) days after replacement, whichever occurs later. The warranty provider's responsibility with respect to this limited warranty shall be limited solely to repair or replacement, at the provider's discretion, of any product that fails during normal use of this product in its intended manner and in its intended environment. Inoperability of the product or part(s) shall be determined by the warranty provider. If the product has been discontinued, the warranty provider reserves the right to replace it with a model of equivalent quality and function.

This warranty does not cover damage or defect caused by misuse, neglect, accident, alteration, abuse, improper installation or maintenance. EXCEPT AS PROVIDED HEREIN, THE WARRANTY PROVIDER MAKES NEITHER ANY EXPRESS WARRANTIES NOR ANY IMPLIED WARRANTIES, INCLUDING BUT NOT LIMITED TO ANY IMPLIED WARRANTY OF MERCHANTABILITY OR FITNESS FOR A PARTICULAR PURPOSE. This warranty provides you with specific legal rights, and you may also have additional rights that vary from state to state.

To obtain warranty coverage, contact the Gabor Customer Service Department to obtain a return merchandise authorization ("RMA") number, and return the defective product to Gabor along with the RMA number and proof of purchase. Shipment of the defective product is at the purchaser's own risk and expense.

For more information or to arrange service, visit www.madebygabor.com or call Customer Service at 212-594-2353.

Product warranty provided by the Gradus Group.

GABOR®
A **Gradus Group** Brand

www.gradusgroup.com

Gabor is a registered trademark of the Gradus Group.
© 2023 Gradus Group LLC. All Rights Reserved.
All images are for illustrative purposes only.

GG1