MP60

MICROPHONE PREAMPLIFIER



POLSEN®

PRODUCT MANUAL

THANK YOU FOR CHOOSING POLSEN.

The Polsen MP60 Microphone Preamp is a compact, single-channel mic pre that can add up to 60 dB of clean gain to dynamic and condenser microphones.

This preamp features balanced XLR and unbalanced 3.5 mm inputs and outputs, so it can boost mic signals for a wide variety of applications whether it's in studio recording, broadcast, or podcast. Pro features like a 120 Hz high-pass filter and a phase switch ensure your sound will be full and robust without added noise or coloration.



PRECAUTIONS ⚠

- Please read and follow these instructions, and keep this manual in a safe place.
- Keep this unit away from water and any flammable gases or liquids.
- Use only the correct, recommended voltage.
- Do not attempt to disassemble or repair the equipment — doing so will void the warranty, and Polsen will not be responsible for any damage.
- Clean the unit with only a soft, dry cloth.
- Use only parts provided by the manufacturer.
- Make sure that this product is intact and that there are no missing parts.
- All images are for illustrative purposes only.

OVERVIEW

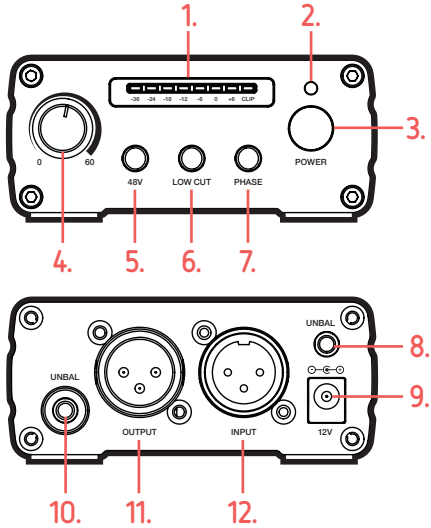
1.
2.
-36 -24 -18 -12 -6 0 +6 CLIP
0
60
POWER
3.
48V
LOW CUT
PHASE
4.
5.
6.
7.
UNBAL
8.
9.
UNBAL
OUTPUT
INPUT
12V
10.
11.
12.

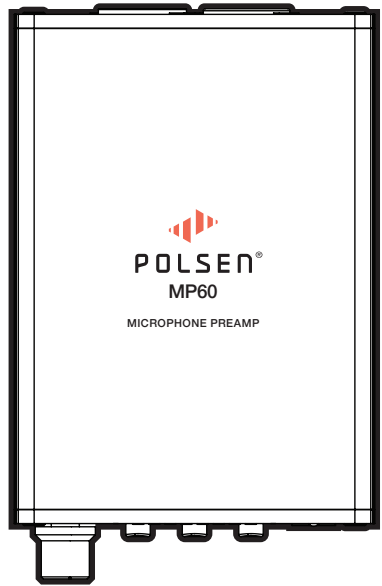
POLSEN®
MP60
MICROPHONE PREAMP

1. **8-level signal level and clip indicator**
   Indicates the level of the outgoing signal. The red clip indicator lights up when the signal is too loud and distorting. If the clip indicator continually lights up, turn down the gain until the loudest portion of the signal does not light up the clip indicator.
2. **Power LED indicator**
3. **Power button**
4. **Microphone gain control**
   Adjusts the microphone's signal strength.
5. **Phantom power switch**
   Press to activate phantom power when connecting a condenser microphone that requires phantom power to operate.
6. **Low cut filter switch**
   Press to activate the low cut filter. The filter decreases frequencies below 120 dB by 3 dB. This will minimize low-end room and ambient noise as well as noise from air conditioning ducts, fans, and overhead lights.
7. **Phase switch**
   Press to activate the Phase switch. Out-of-phase audio sounds thin due to missing frequencies. Activating the phase switch reverses the microphone signal's polarity to maintain a full sound. Use the phase switch in two-mic setups, e.g., microphones placed above and below a drum, or close and room mics for recording dialog.
8. **Unbalanced 3.5 mm mic input**
   For use with devices that have a 1/8" (3.5 mm) connector.
9. **Power input**
   Attach the included power cord.
10. **Unbalanced 3.5 mm mic output**
    For devices with 1/8" (3.5 mm) connector. Output can also be used for headphone monitoring.
11. **Balanced XLR output**
    Connect to a mixing board, PA system, or audio interface with balanced XLR inputs.
12. **Balanced XLR mic input**
    Connect an XLR microphone.

SPECIFICATIONS

NUMBER OF CHANNELS	1
FREQUENCY RESPONSE	50 Hz to 20 kHz
INPUTS	XLR balanced 3.5 mm unbalanced
OUTPUT	XLR balanced 3.5 mm unbalanced
PHANTOM POWER	Yes, 48 V
GAIN RANGE	0 to 60 dB
INPUT IMPEDANCE	10 kΩ (balanced)
OUTPUT IMPEDANCE	200 Ω
MAX INPUT LEVEL	-3 dBu (referred to min gain) -40 dBu (referred to max gain)

TOTAL HARMONIC DISTORTION (THD)	0.03@ 1 kHz at 21 dBm (referred to min gain)
MAXIMUM OUTPUT LEVEL	+20 dBu (XLR balanced) +8 dBu (3.5 mm unbalanced)
OUTPUT NOISE	<2 mV
POWER	12 V DC
DIMENSIONS (H × W × L)	1.5 × 3.7 × 5 in. (3.8 × 9.5 × 12.7 cm)
WEIGHT	12.2 oz. (347 g)

ONE-YEAR LIMITED WARRANTY

This Polsen product is warranted to the original purchaser to be free from defects in materials and workmanship under normal consumer use for a period of one (1) year from the original purchase date or thirty (30) days after replacement, whichever occurs later. The warranty provider's responsibility with respect to this limited warranty shall be limited solely to repair or replacement, at the provider's discretion, of any product that fails during normal use of this product in its intended manner and in its intended environment. Inoperability of the product or part(s) shall be determined by the warranty provider. If the product has been discontinued, the warranty provider reserves the right to replace it with a model of equivalent quality and function.

This warranty does not cover damage or defect caused by misuse, neglect, accident, alteration, abuse, improper installation or maintenance. EXCEPT AS PROVIDED HEREIN, THE WARRANTY PROVIDER MAKES NEITHER ANY EXPRESS WARRANTIES NOR ANY IMPLIED WARRANTIES, INCLUDING BUT NOT LIMITED TO ANY IMPLIED WARRANTY OF MERCHANTABILITY OR FITNESS FOR A PARTICULAR PURPOSE. This warranty provides you with specific legal rights, and you may also have additional rights that vary from state to state.

To obtain warranty coverage, contact the Polsen Customer Service Department to obtain a return merchandise authorization ("RMA") number, and return the defective product to Polsen along with the RMA number and proof of purchase. Shipment of the defective product is at the purchaser's own risk and expense.

For more information or to arrange service, visit www.polsenaudio.com or call Customer Service at 212-594-2353.

Product warranty provided by the Gradus Group.
www.gradusgroup.com

Polsen is a registered trademark of the Gradus Group. © 2024 Gradus Group LLC. All Rights Reserved.

POLSEN®
A Gradus Group Brand