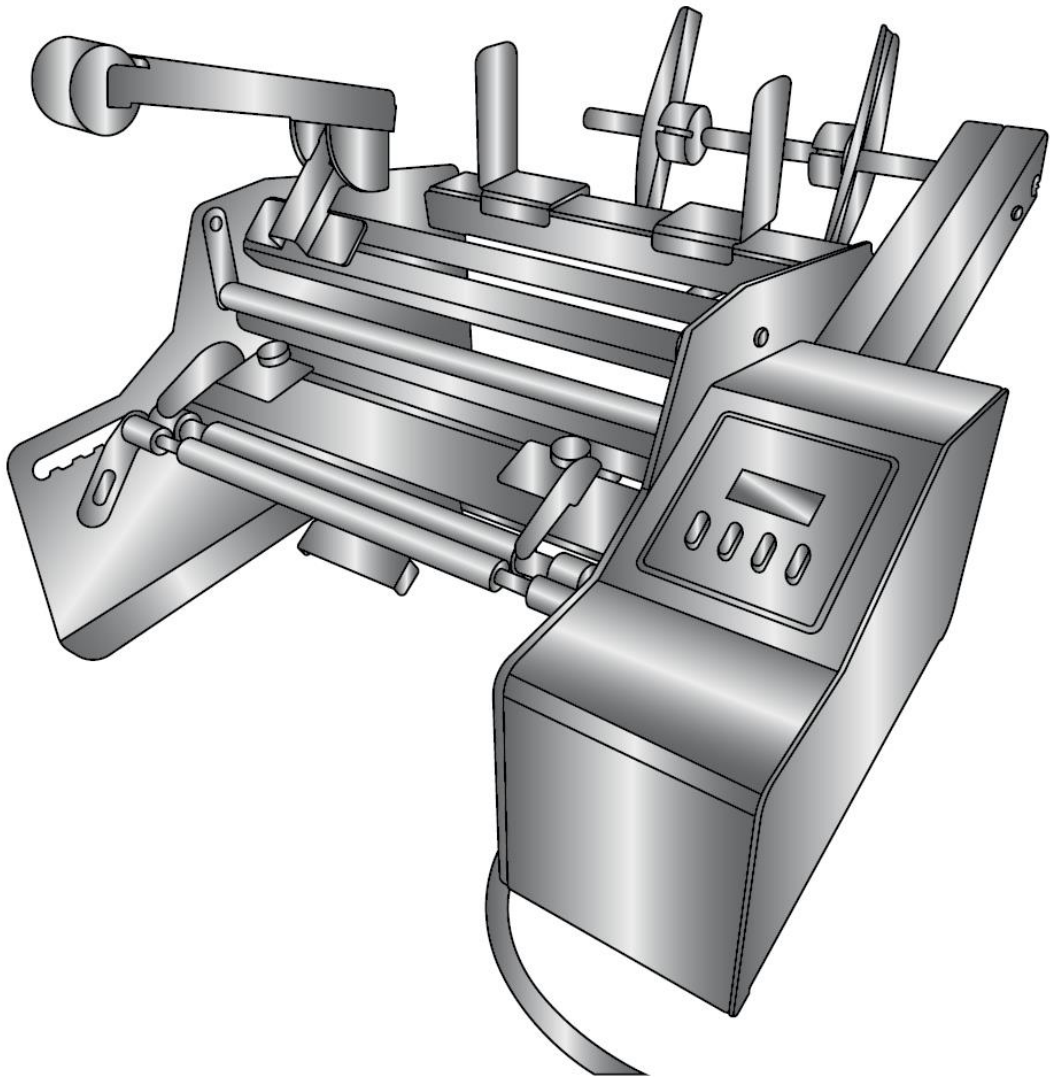

AP380
LABEL APPLICATOR

User's Manual

© 2024 All rights reserved.

For the most recent version of this manual please visit
https://www.primera.com/applicatordownloads

010224

Notices: The information in this document is subject to change without notice. NO WARRANTY OF ANY KIND IS MADE WITH REGARD TO THIS MATERIAL, INCLUDING, BUT NOT LIMITED TO, THE IMPLIED WARRANTIES OF MERCHANTABILITY AND FITNESS FOR A PARTICULAR PURPOSE. No liability is assumed for errors contained herein or for incidental or consequential damages in connection with the furnishing, performance, or use of this material.

This document contains proprietary information that is protected by copyright. All rights are reserved. No part of this document may be photocopied, reproduced, or translated into another language without prior written consent.

Trademark Acknowledgments: Primera and Primera Eddie are registered trademarks of Primera Technology, Inc. Windows is a registered trademark of Microsoft Corporation. All other trademarks are the property of their respective owners.

Revision History

Edition 1.0, Copyright 2024, All rights reserved.

FCC Compliance Statement: This device complies with part 15 of the FCC rules. Operation is subject to the following two conditions: (1) this device may not cause harmful interference, and (2) this device must accept any interference received, including interference that may cause undesired operation.

For Users in the United States: This product is intended to be supplied by a UL listed Direct Plug-In Power Supply marked "Class 2" or a UL listed ITE Power Supply marked "LPS" with output rated 12VDC, 3A or higher. This equipment has been tested and found to comply with the limits for a Class A digital device, pursuant to Part 15 of the FCC Rules. In a domestic environment, this product may cause radio interference, in which case the user may be required to take adequate measures. This equipment generates, uses, and can radiate radio frequency energy and, if not installed and used in accordance with the instructions, may cause harmful interference to radio communications. However, there is no guarantee that interference will not occur in a particular installation. If this equipment does cause harmful interference to radio or television reception, which can be determined by turning the equipment off and on, the user is encouraged to try to correct the interference by one or more of the following measures:

- Re-orient or relocate the receiving antenna.
- Increase the separation between the equipment and receiver.
- Connect the equipment into an outlet on a circuit different from that to which the receiver is connected.
- Consult the dealer or an experienced radio/TV technician for help.

Use of shielded cables is required to comply with the Class A limits of Part 15 of the FCC Rules. You are cautioned that any changes or modifications not expressly approved in this manual could void your authority to operate and/or obtain warranty service for this equipment.

For Users in Canada: This digital apparatus does not exceed the Class A limits for radio noise for digital apparatus set out on the Radio Interference Regulations of the Canadian Department of Communications. Le present appareil numerique n'emet pas de bruits radioelectriques depassant les limites applicables aux appareils numeriques de la class A prescrites dans le Reglement sur le brouillage radioelectrique edicte par le ministere des Communications du Canada.

! WARNING !

TO PREVENT FIRE OR SHOCK HAZARDS, DO NOT EXPOSE THE UNIT TO RAIN OR MOISTURE. TO REDUCE THE RISK OF ELECTRIC SHOCK, DO NOT REMOVE EXTERIOR PANELS. NO USER-SERVICEABLE PARTS INSIDE. REFER SERVICING TO QUALIFIED SERVICE PERSONNEL. OPERATE THE UNIT WITH ONLY THE PROPER ELECTRICAL SPECIFICATIONS AS LABELED ON THE PRINTER AND AC ADAPTER.

! WARNING!

DO NOT WEAR LOOSE-FITTING CLOTHING SUCH AS NECK TIES OR LOOSE LONG SLEEVES WHEN OPERATING THE AP380. THE MOTOR IS VERY POWERFUL AND THE LINER DRIVE ROLLER COULD CATCH THE CLOTHING WHILE THE LABELS ARE BEING APPLIED.

Table of Contents

Section 1: Unpacking and Setup 4
Section 2: Assemble the Liner Rewinder 6
Section 3: Loading the Label Stock 11
Section 3: Loading the Container 20
Section 4: Applying the Label 24
4A. Apply the Label 24
4B. Apply Two Labels to the Same Container 24
4C. Calculate Distances for Two-Label Mode 25
4D. Count labels (AP380 Only) 26
Section 5: Settings Overview 27
5A. Application Speed 27
5B. Label Counter Mode 27
5C. Label Application Modes 27
5D. Container Roller Modes 28
5E. Units of Measure 28
Section 6: Label Path Diagram 29
Section 7: Troubleshooting and Maintenance 30
7A. Troubleshooting 30
7B. Maintenance 32
Section 8: Specifications 35
Section 9: Certifications and Environmental Policy 36

Section 1: Unpacking and Setup

Thank you for purchasing the AP380 Label Applicator (hereafter referred to as "applicator"). Bottles, cans, etc. will collectively be referred to as "containers."

Please note the parts of the applicator which will be referenced at multiple points in the manual that follows.

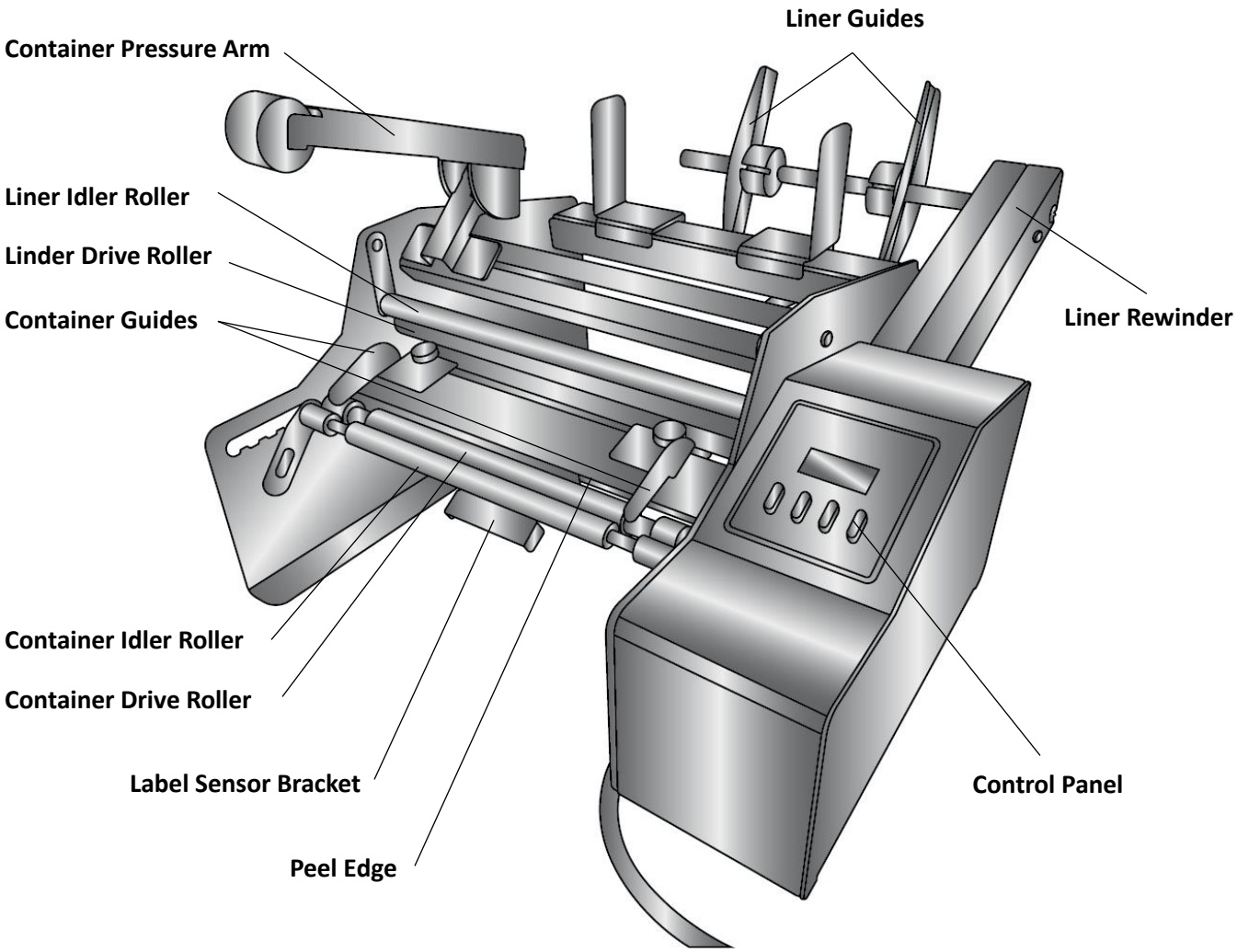

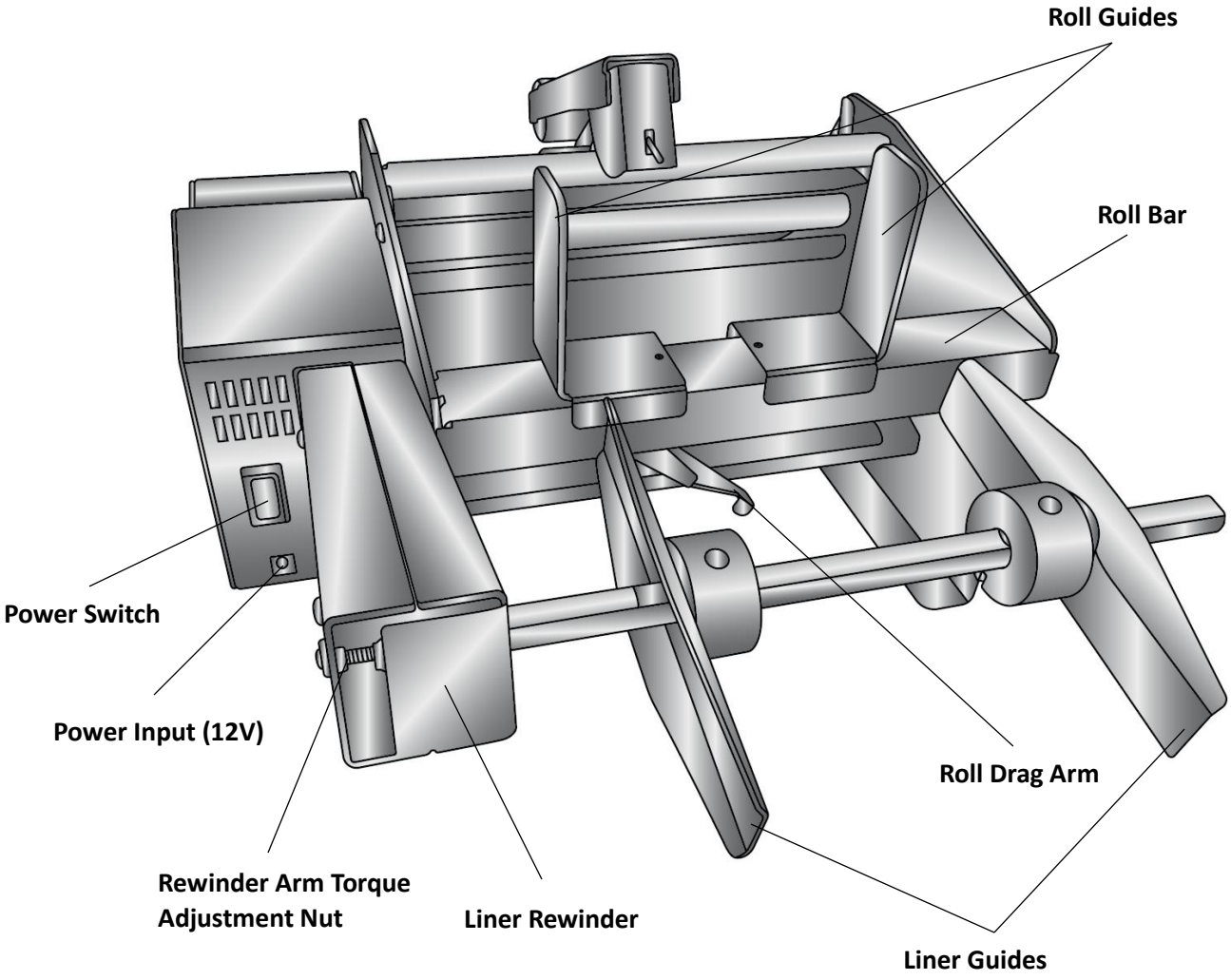

Foot Switch



Power Adapter

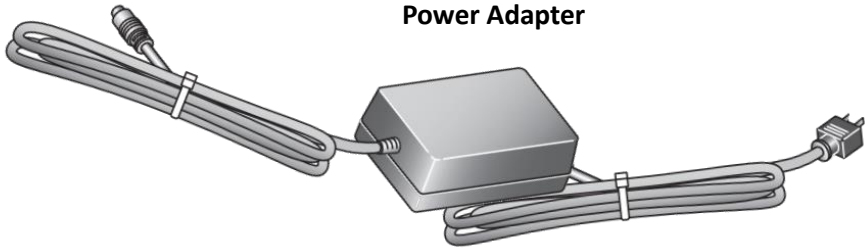

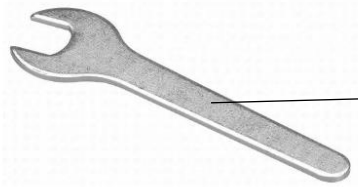

Wrench (for rewinder arm torque adjustment)

Section 2: Assemble the Liner Rewinder

The rewinder portion of the AP380 requires minor assembly. No tools are required. Follow these instructions.

1. Locate the rewinder arm, liner guides, and two thumbscrews.

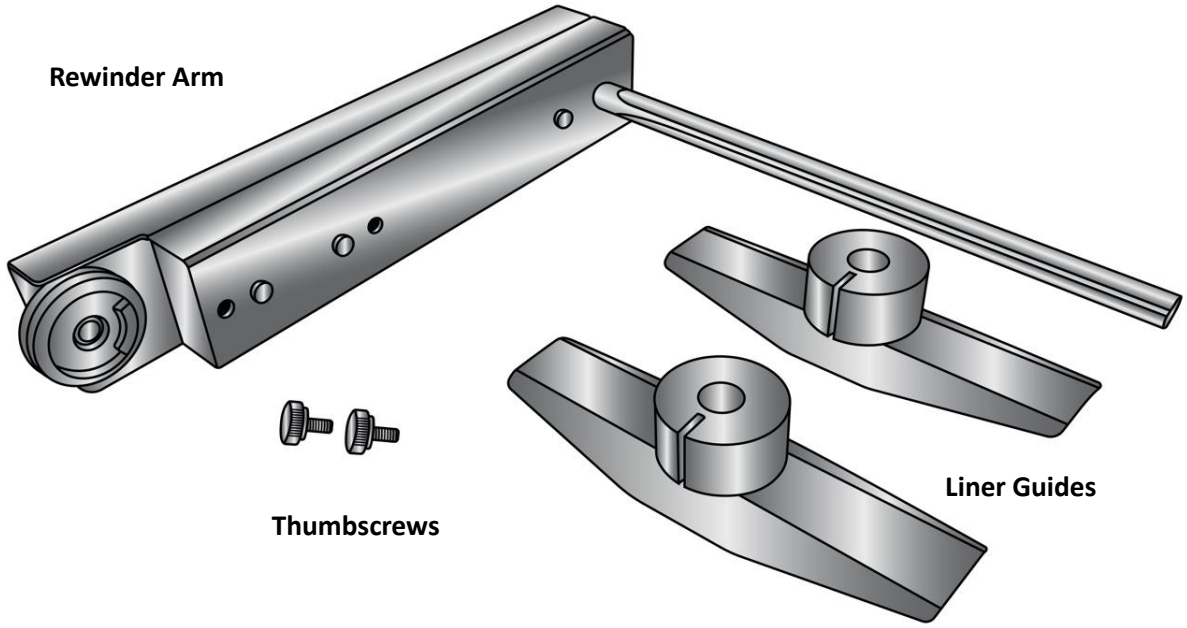

2. Find the opening for the rewinder arm on the back of the applicator above the power switch.

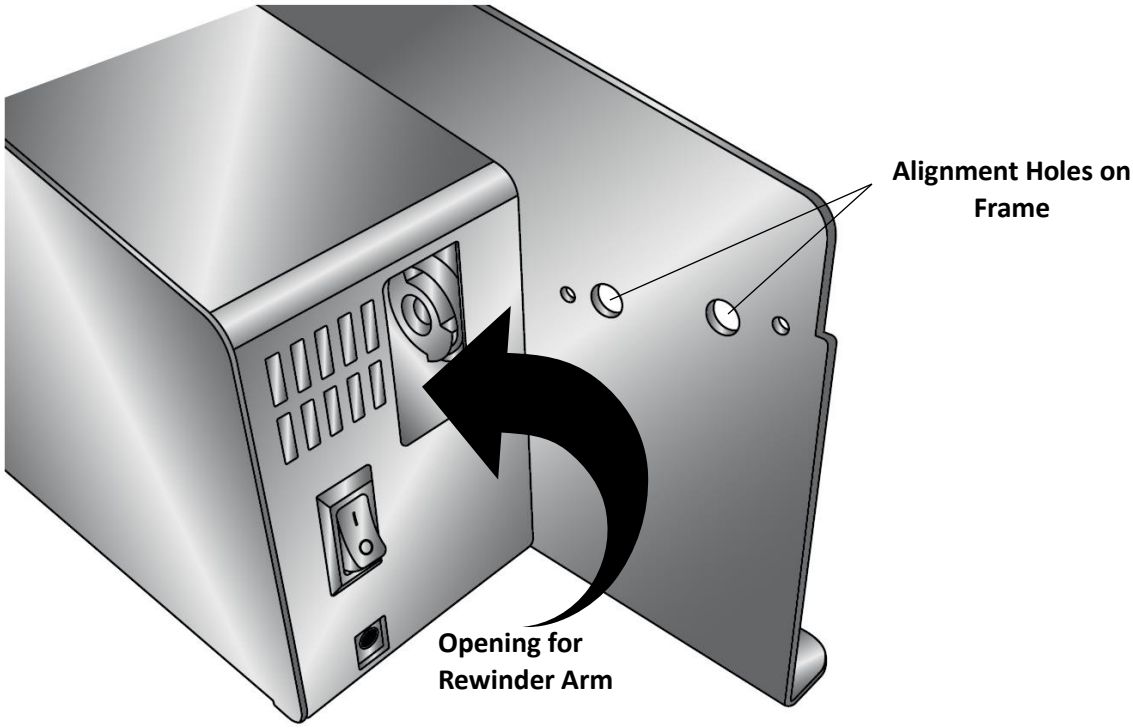

3. Insert the rewinder arm into the opening as shown.

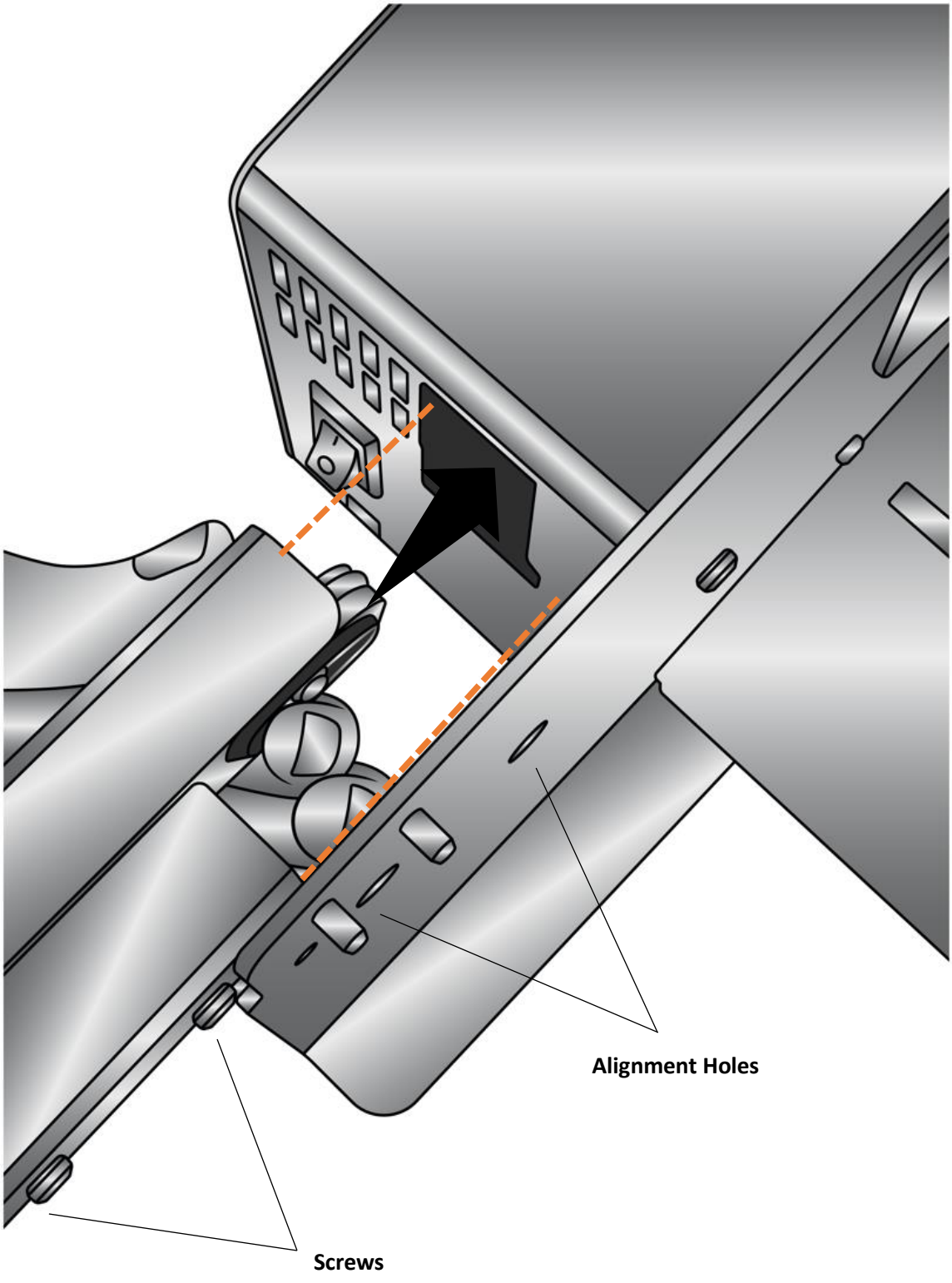

4. Align the screws on the side of the arm with the holes in the applicator frame.

5. Insert the thumbscrews into the threaded holes. Hand tighten the thumbscrews.

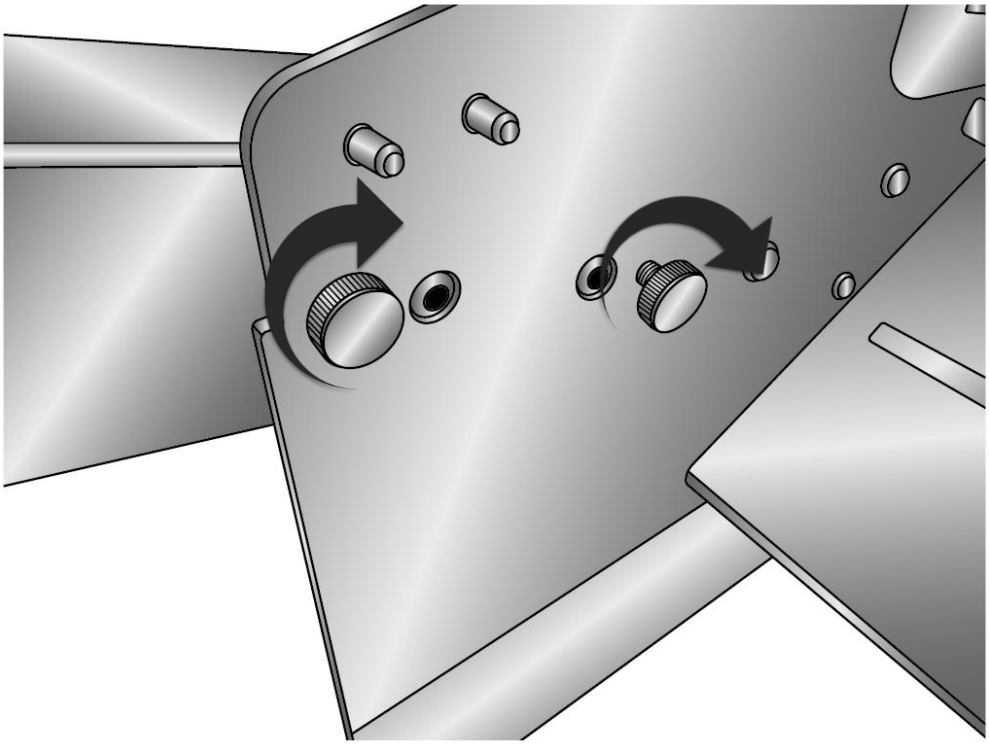

6. If not already attached to th rewinder arm, the liner guides must be installed on the rewinder. Locate the liner guides. Slide one of the label guides onto the shaft with the black cylinder facing you. Note that the holes in the cylinder must align with the flats on the shaft.

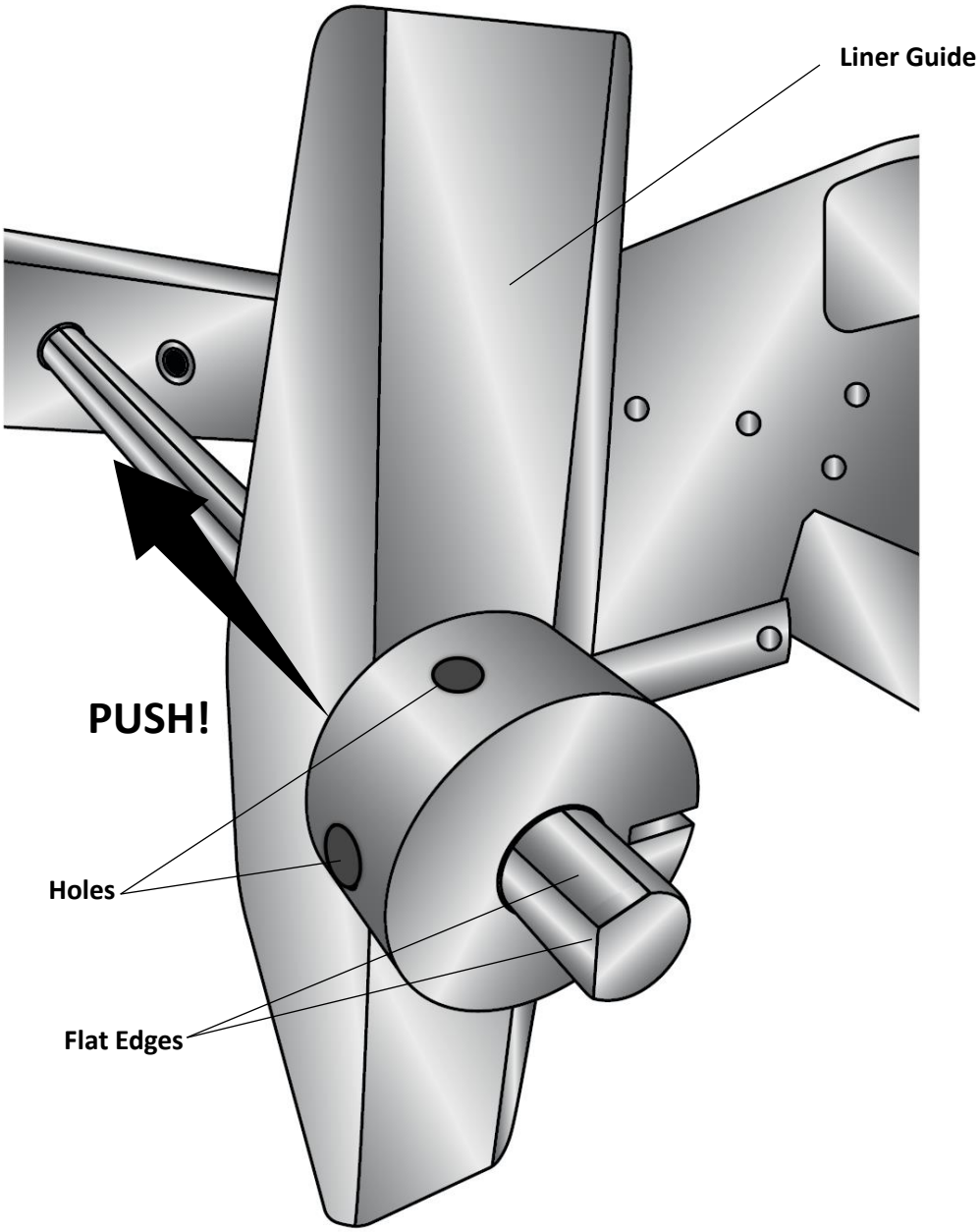

7. Push the remaining liner guide onto the shaft with the black cylinder facing away from you. The guides should be calibrated from the factory to stay in place during label application, but allow adjustment of their position without the use of tools. If more or less sliding force is desired, the set screws in the black cylinders can be tightened or loosened with a 2mm hex key. The two set screws in each cylinder should be tightened equally.

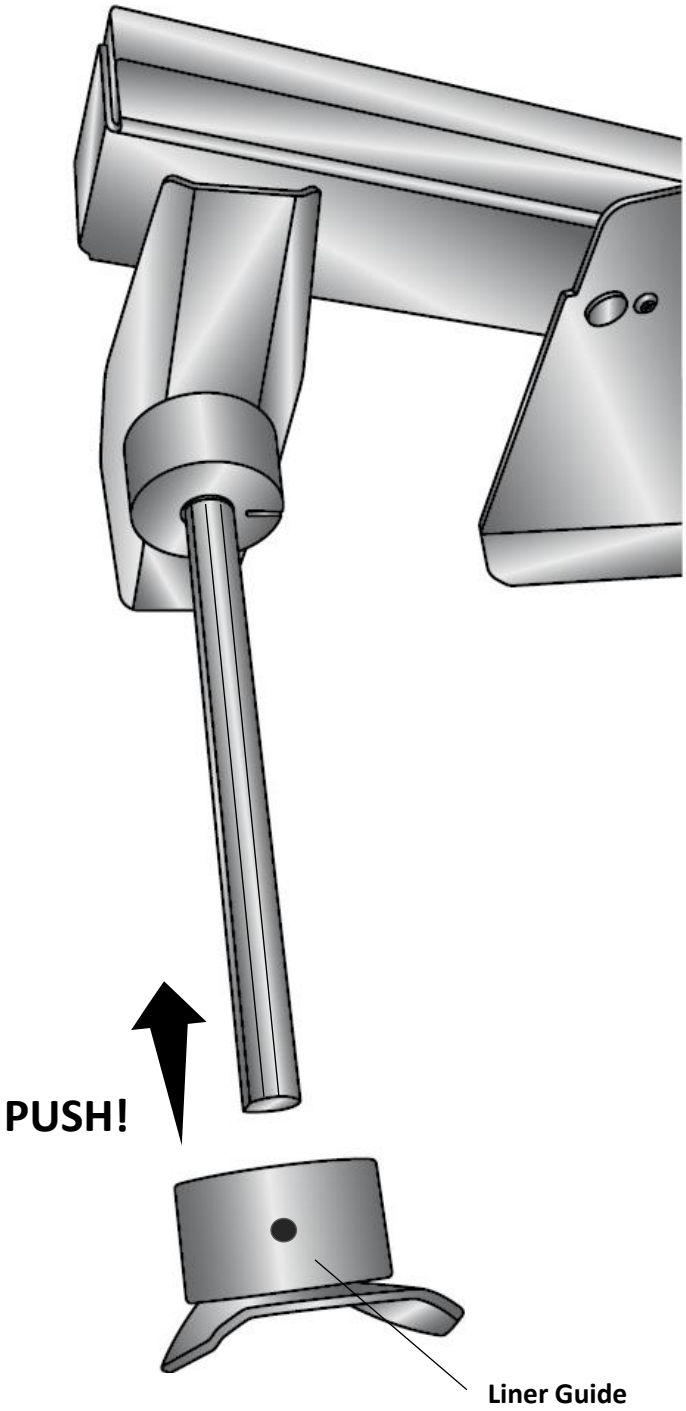

Section 3: Loading the Label Stock

1. Remove the roll bar and roll guides from the applicator. The roll guides and roll drag arm are removable and adjustable. They are held in place magnetically.

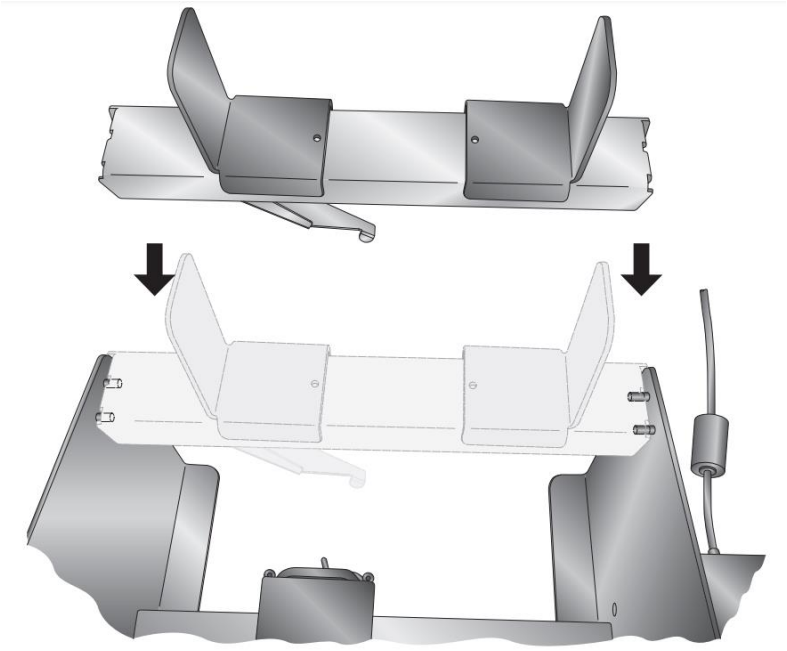

2. Remove one roll guide and the roll drag arm from the roll bar.

3. Place the label stock roll on the roll bar with one side against the upright of the remaining roll guide. Place it on the roll bar with the loose end of the stock feeding underneath the roll.

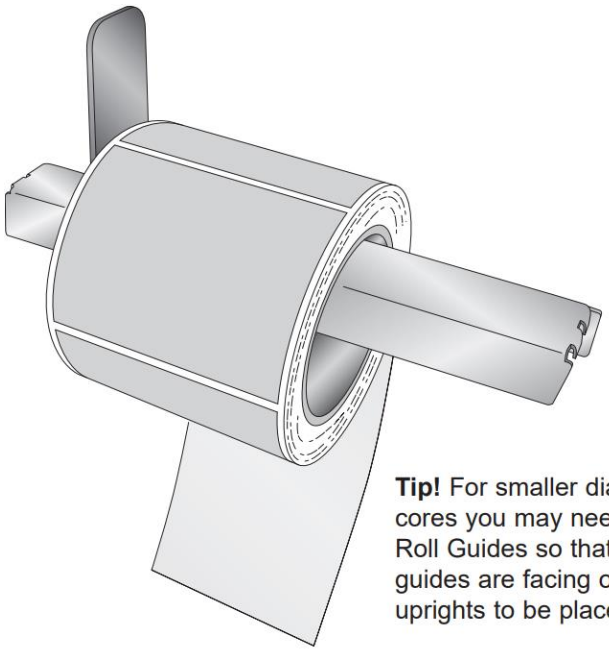

Tip! For smaller diameter label roll cores you may need to reverse the Roll Guides so that the bottom of the guides are facing out to allow the uprights to be placed next to the roll.

4. Place the roll drag arm under the roll bar. The roll drag arm may be placed on either side of the roll bar but the rounded tip of the roll drag arm should be located inside the core approximately in the center. The arm is spring loaded so that there is downward pressure on the inside of the roll. This helps prevent application alignment problems near the end of a label stock roll.

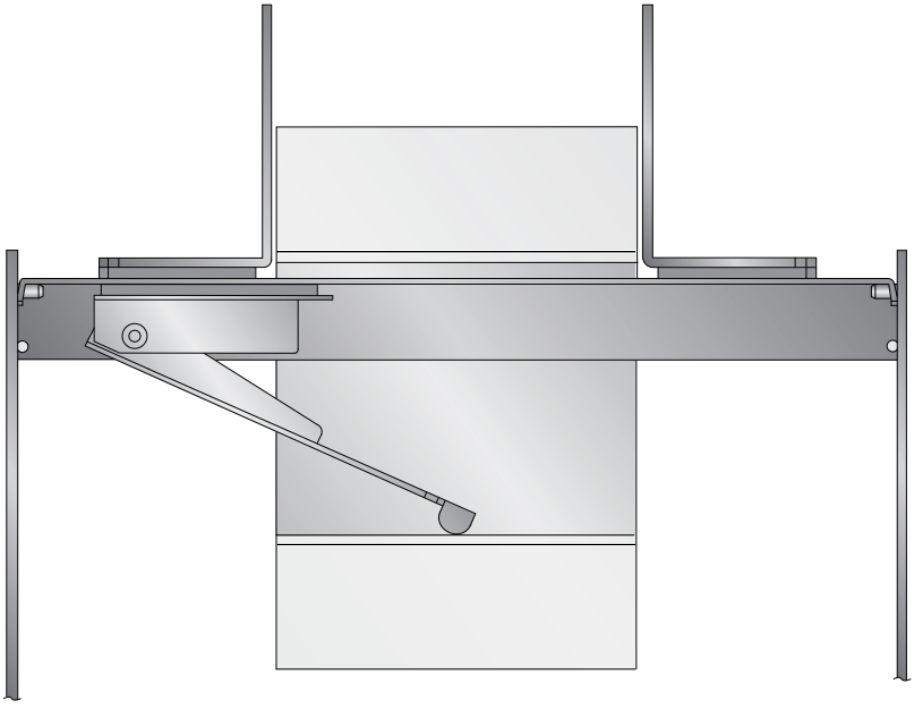

5. Place the removed roll guide back on the roll bar and slide it close to, but not touching the label stock roll.

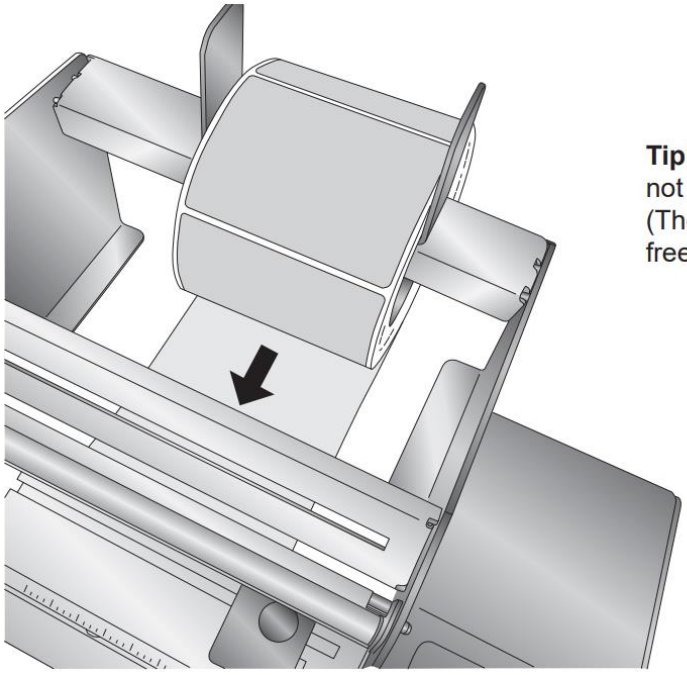

Tip! Roll Guide Uprights must not pinch the label stock roll. (The label stock roll must have free-play between guides.)

6. Position the stock to correspond with the general area where it will be applied to the container.

7. Pull the loose end of the label stock forward and then push it into the feed area from the back of the label applicator. Move the label guides to the sides for now. These will be adjusted later. The labels will come out underneath the peel edge.

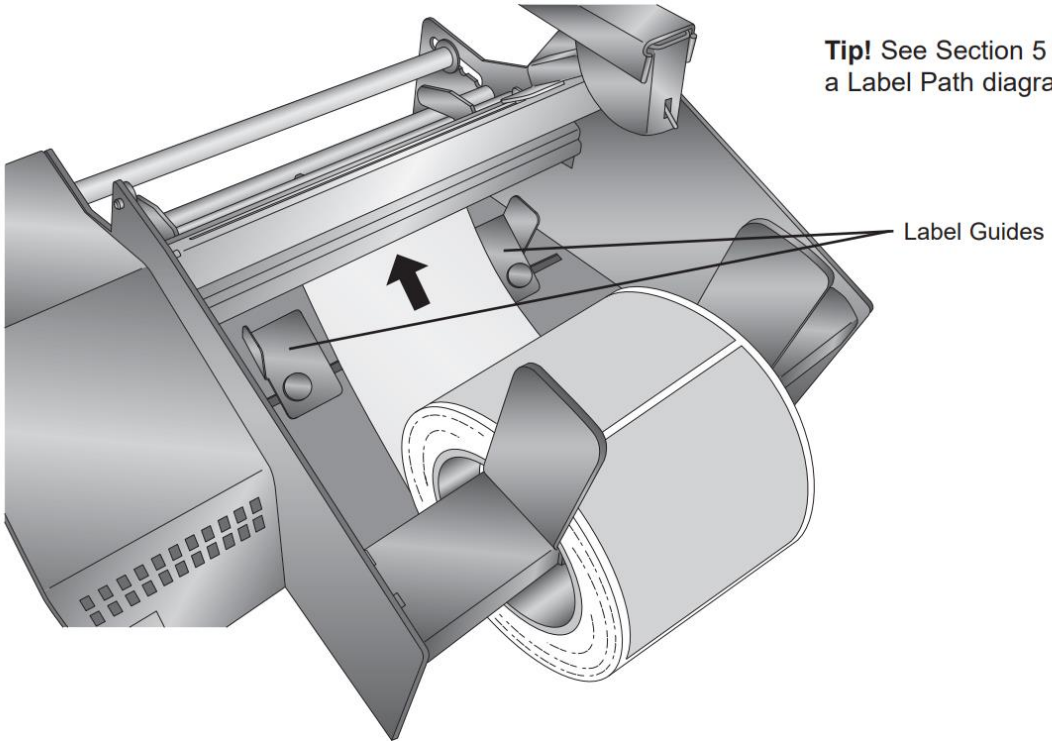

8. Pull approximately 12 inches [30 cm] of label stock out beyond the peel edge.

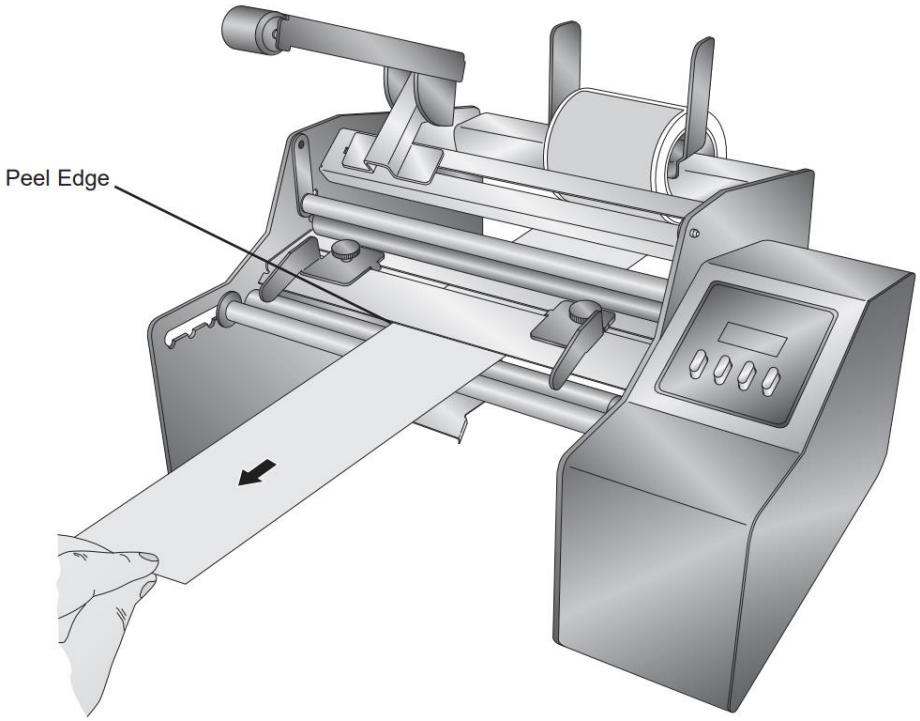

9. Take the loose label stock and feed it between the liner idler roller and the liner drive roller. In order to feed the label stock between the rollers, the liner idler roller should be in the unclamped position.

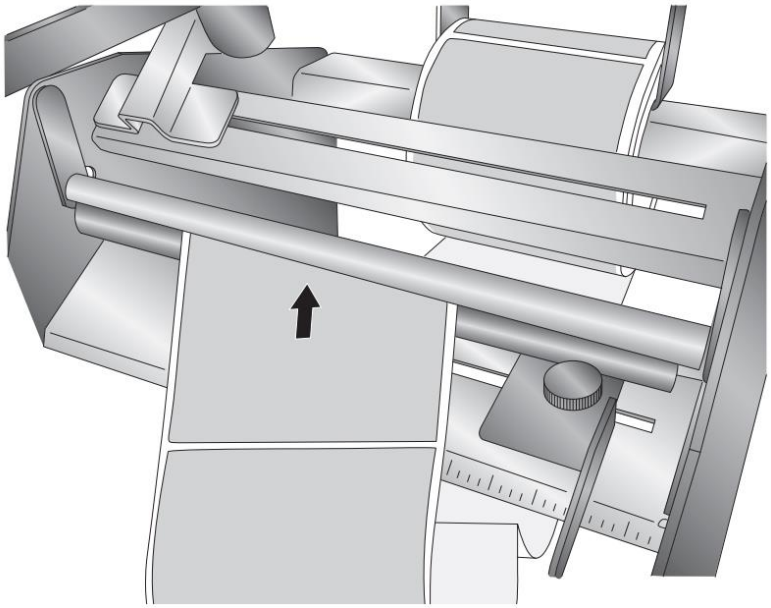

Note: This procedure assumes that the first 12 inches [30 cm] of labels will not be applied to the container using the Applicator. Of course, you may still apply these labels by hand.

10. Pull the label stock all the way through until the end of the roll is laying over the top of the label stock roll. Adjust the label stock forward or backward so that the peel edge is between two labels.

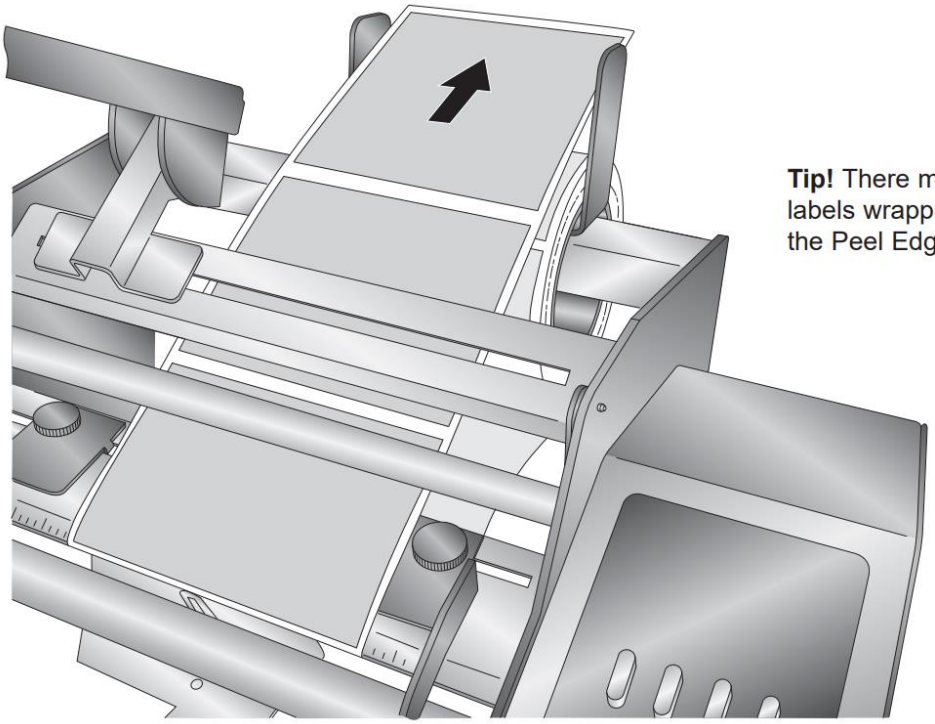

Tip! There must be no labels wrapped around the Peel Edge.

11. If necessary, adjust the position of the liner on the peel edge left/right to align the liner with the label stock roll. Also, adjust the label sensor using the label sensor bracket so that the label sensor flag is roughly centered on the label stock.

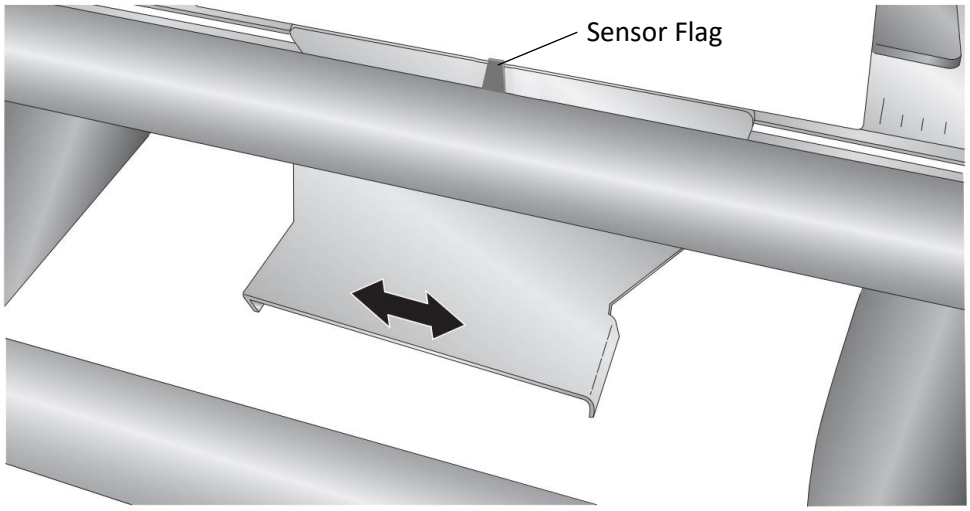

12. Push the liner idler roller into the clamped position.

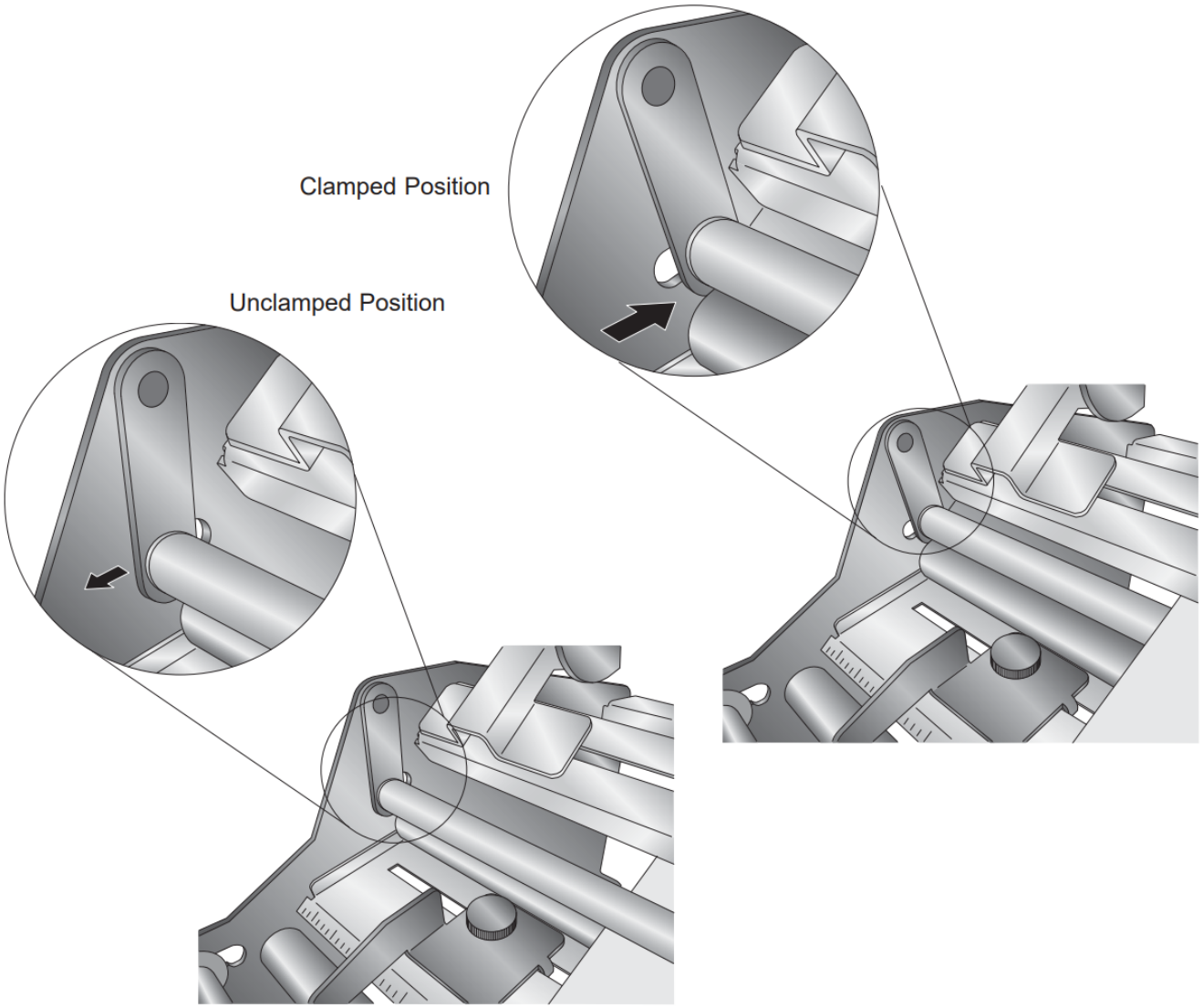

13. Adjust the label guides so that they are just touching the edge of the label stock. Do not pinch the labels between the guides. If the guides are loose pull them away from the label stock and tighten the thumbscrews. When the thumbscrews are tight, you can still move the guides.

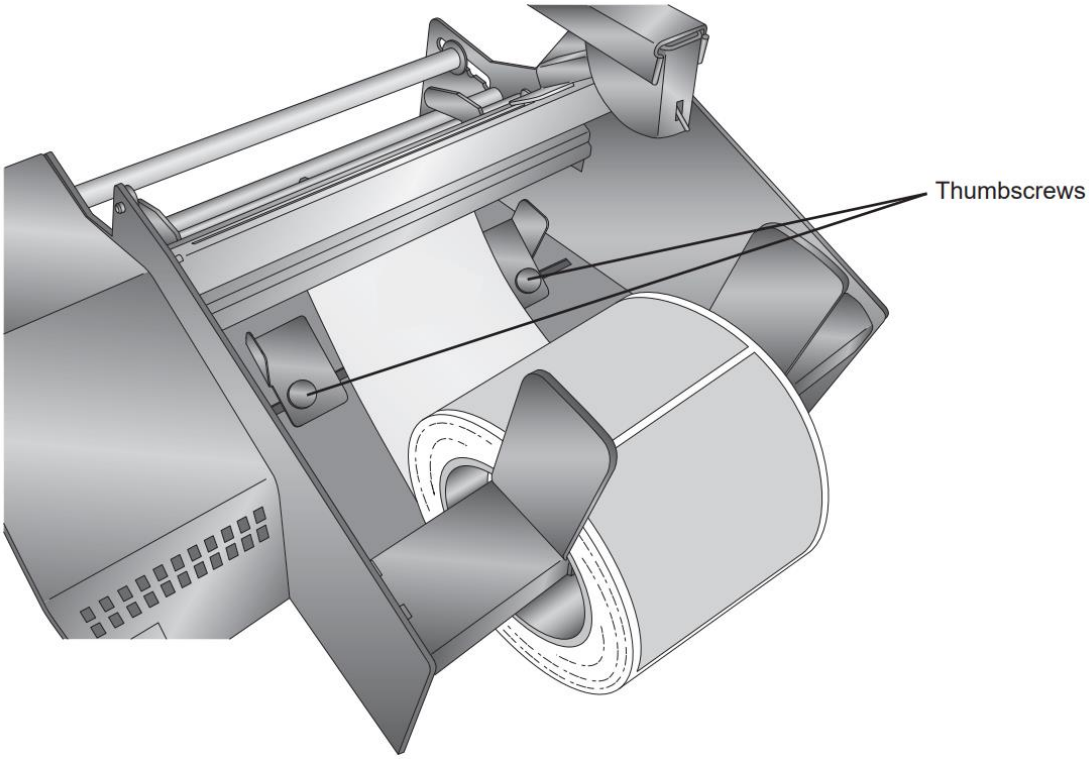

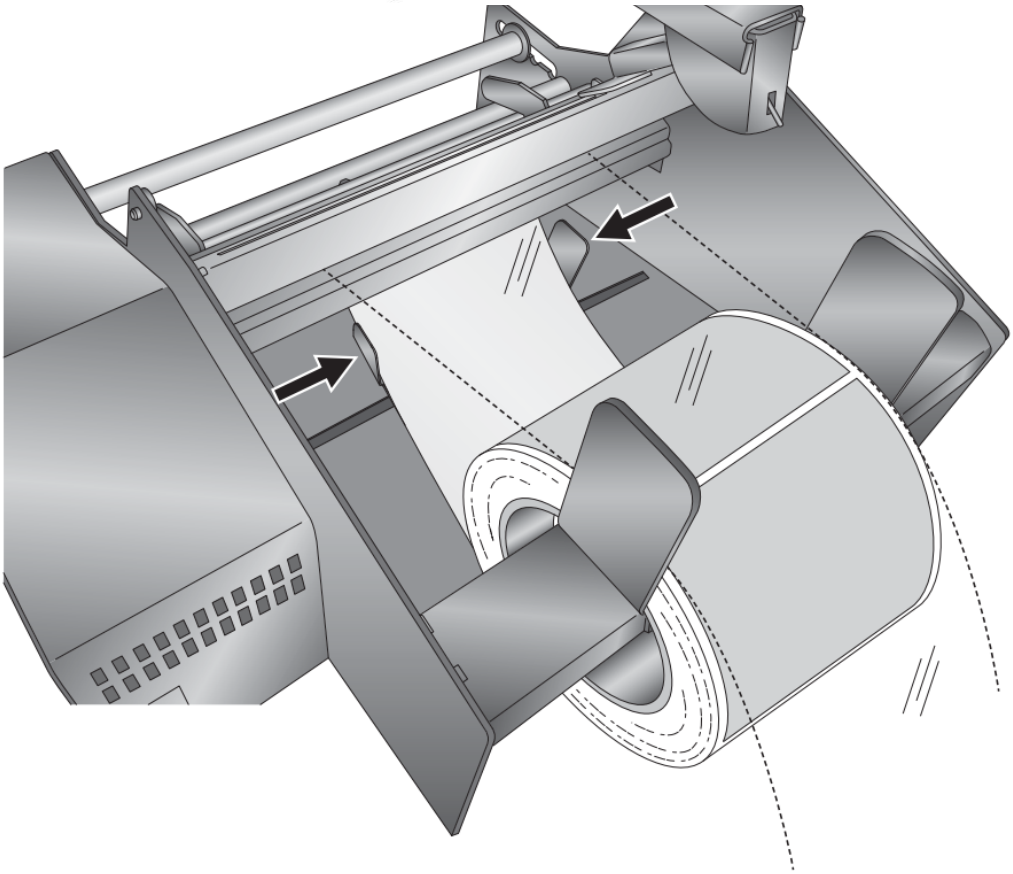

14. Begin applying labels until you have enough liner to reach the liner rewinder. Set the position of the liner guides to provide 1/8” [3mm] space on each side of the liner.

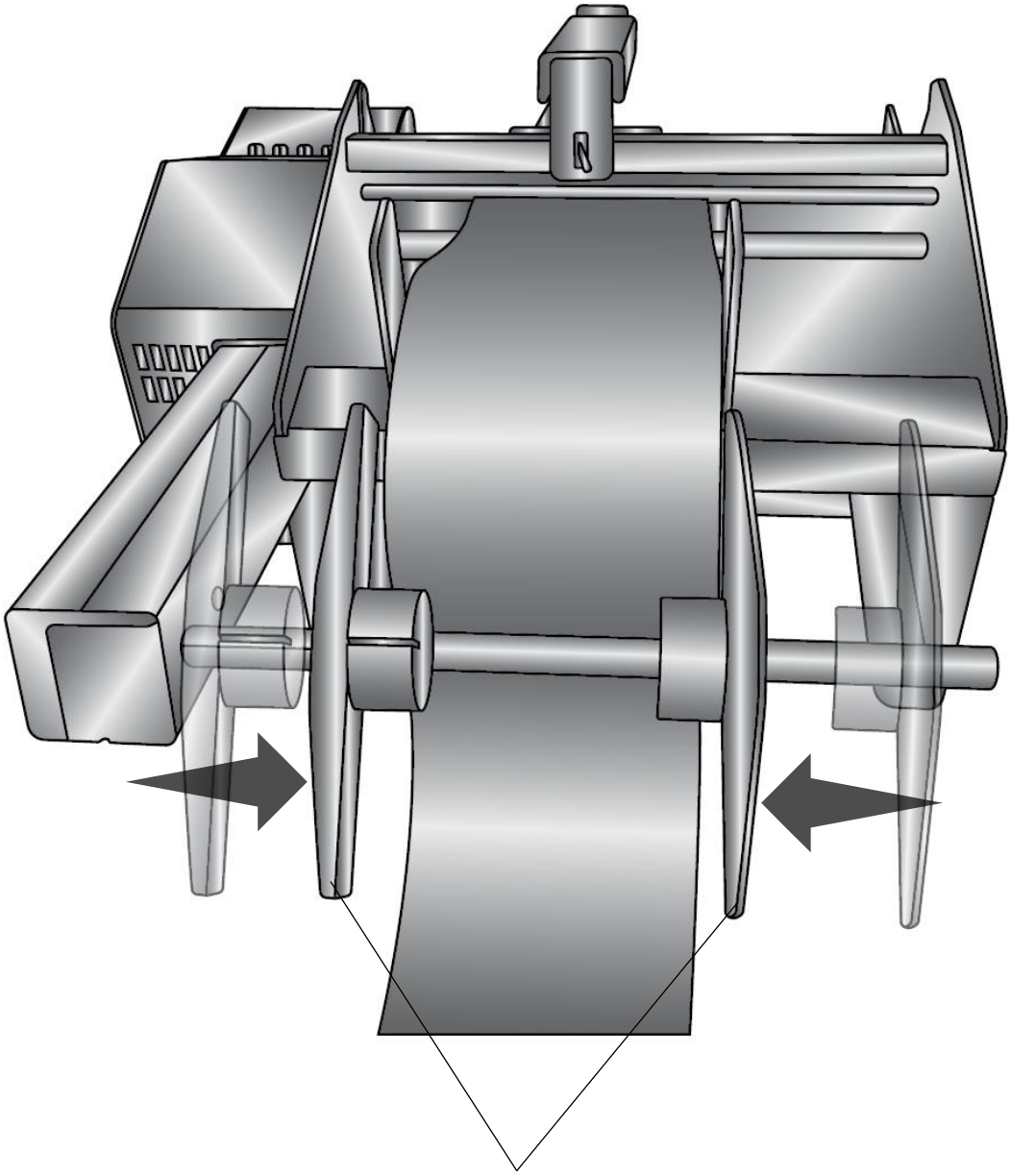

Liner Guides

15. Fold the leading edge of the liner so the folded edge is in the bottom of the slots on both liner guides. **Tip!** We recommend trimming the liner to length with a scissors to minimize the resulting slack in the liner and to provide a square leading edge to fold.

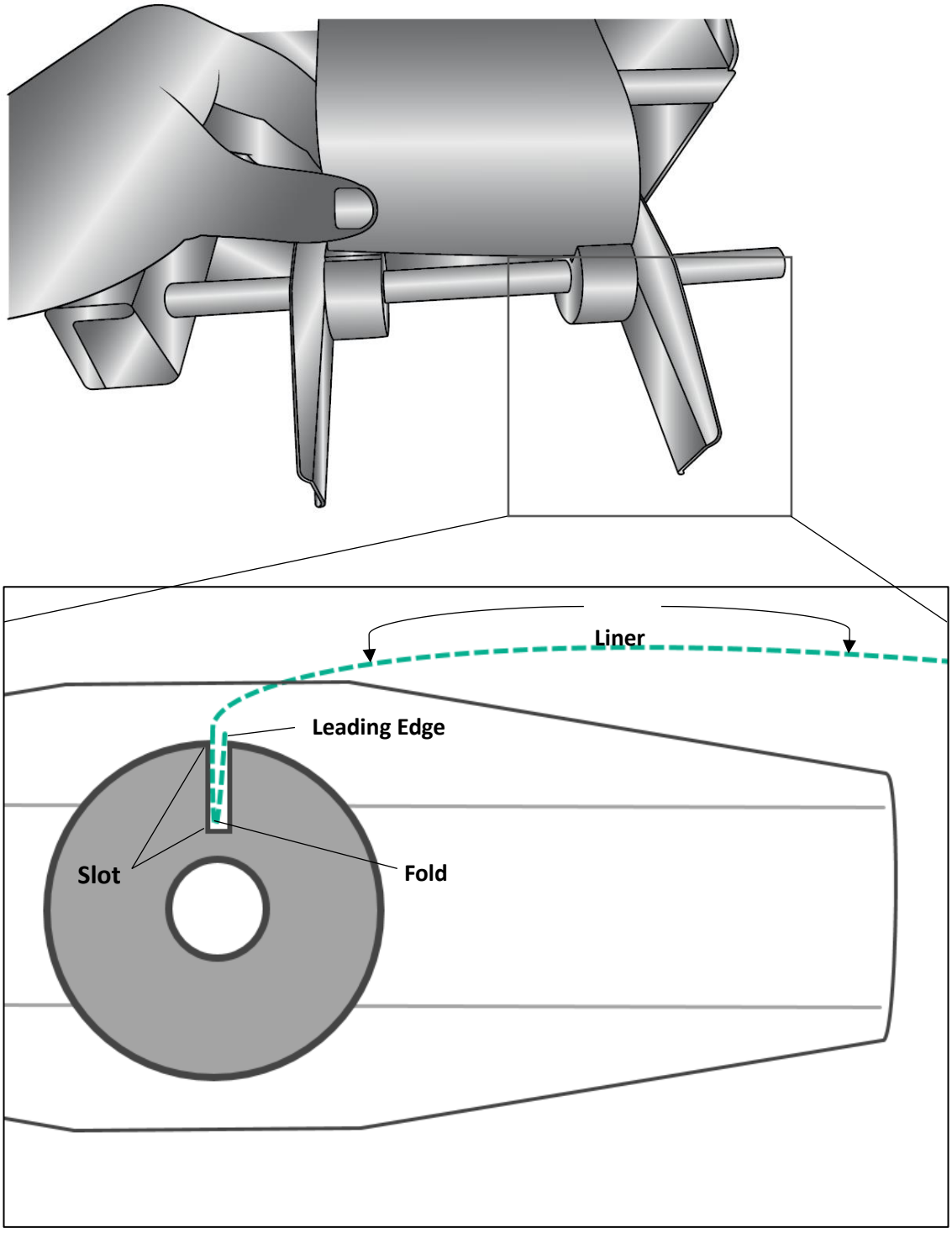

Tip: If the liner is slippery and doesn't fold well or stay in the slot, you can tape the liner to the guides to keep it in place. Use low tack tape that has a long cure period such as blue painters tape. You may also use the applicator without using the liner rewinder by removing the liner guides and letting the linder fall over the shaft onto the floor.

16. Press the foot switch to feed enough labels for the liner to wrap around the liner guide rolls. The pressure of the liner will keep the folded liner in the slots. Or you can just wait until your container is loaded so you don't waste any more labels. **Do not hand turn** the rewinder. It doesn't hurt the rewinder, it just doesn't work as well as using the foot switch to secure the fold in the slot.

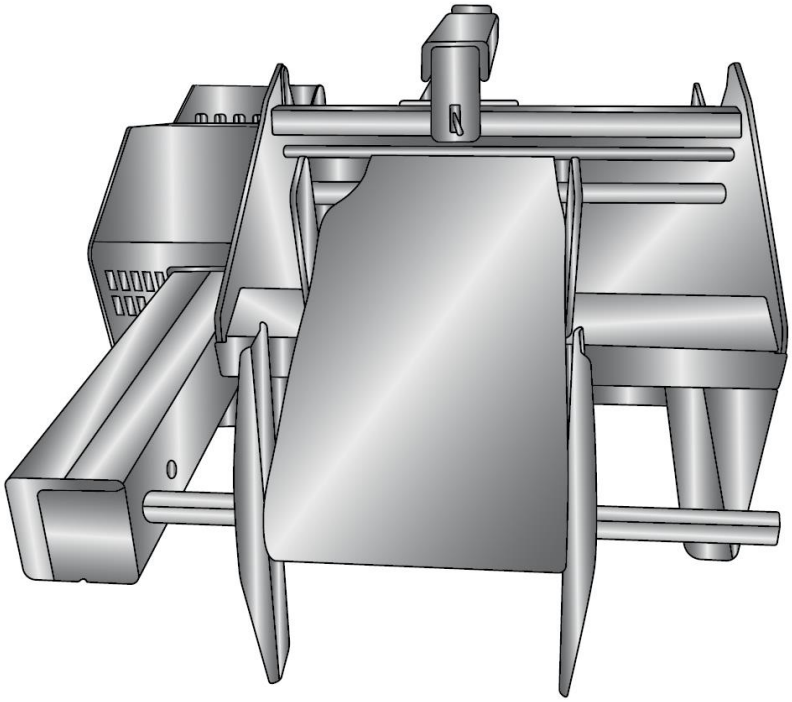

Section 3: Loading the Container

The AP380 can apply labels to a variety of containers including wine bottles, soda bottles, jars, cans, etc. Depending on the container that you are labeling, you have different options to hold and position the container during labeling. You may use the container pressure arm to hold the containers against the rollers, but that may not be necessary for heavier containers. You may use one or both of the container guides to position the container during labeling. Use the following steps as a guide for applying labels. Ultimately, you will find the method that works best for your container, which may or may not include use of the container pressure arm and/or one or both container guides.

1. Lift the container pressure arm to a height well above the imagined height of the container.

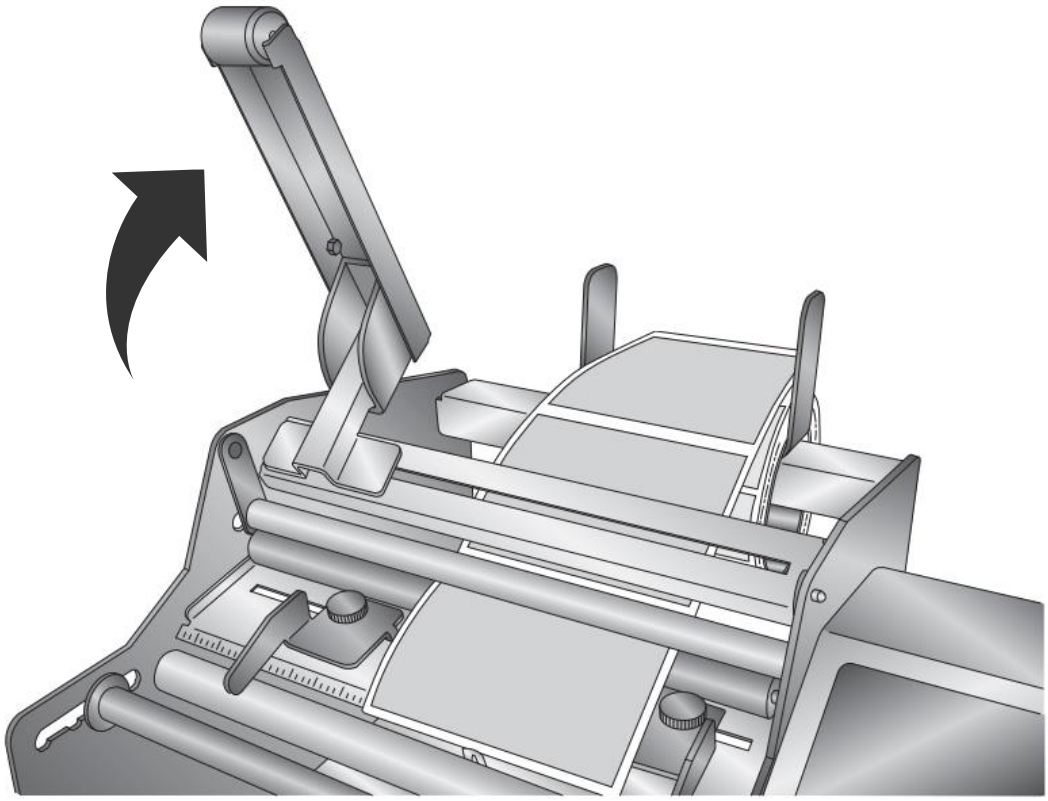

2. Position the container idler roller so that the container is at the highest possible position that is still stable. There are five optional positions for the container idler roller provided by the notches in the side plates. If the container idler roller is spaced too far from the container drive roller, the container will be positioned too low for the label to be applied properly. This will cause the label to fold, wrinkle, or eject above the container. The smaller the diameter of the container, the closer the rollers need to be positioned to each other.

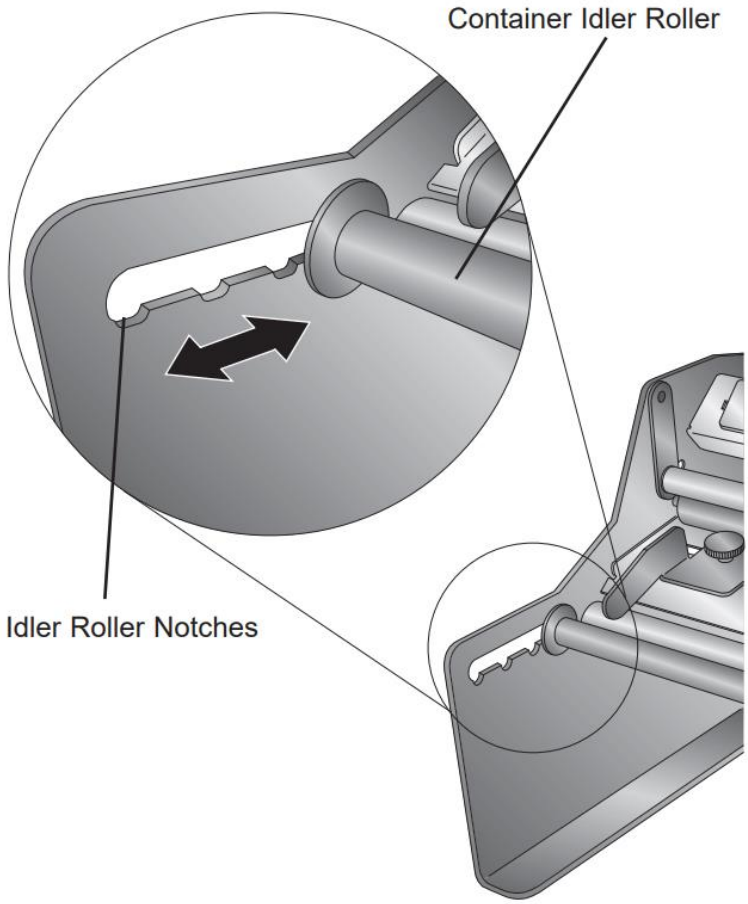

3. Place the container on the container idler roller and container drive roller. Orient the container with the top to the left or the right, depending on the orientation of your labels on the label stock roll.

Tip! Both Container Guides may be used, but for maximum efficiency, typically only one is used to position the container.

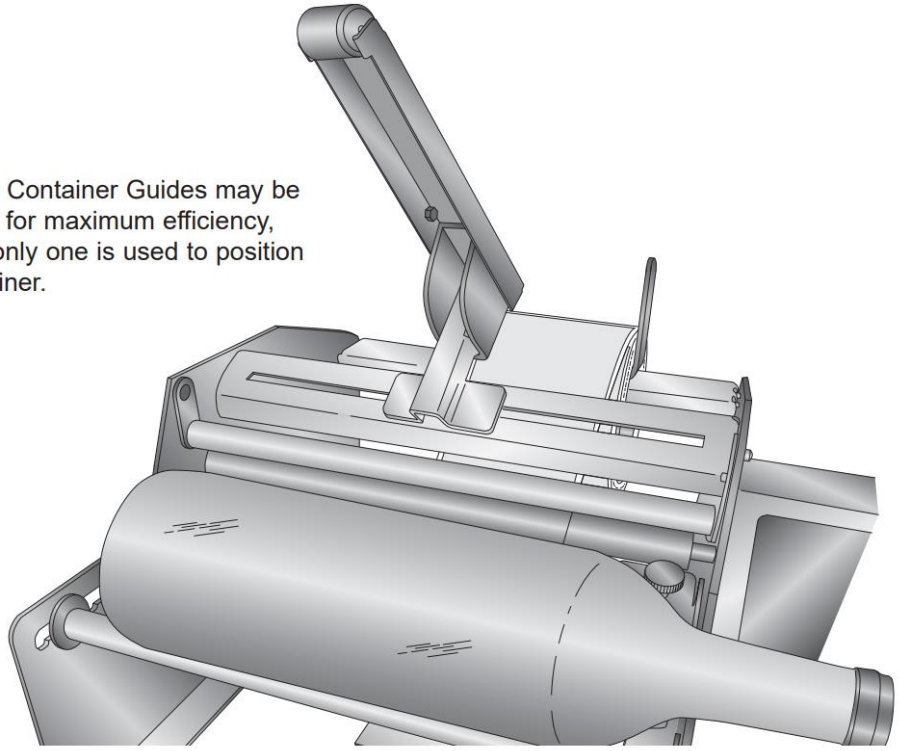

4. Adjust the container guides so the labels will be placed in the desired location on the container. Since it is difficult to get the label stock in the same position each time, we recommend that you adjust the container relative to the label stock using the container guides. If you have multiple container/label combinations, it may be useful to record the distance between the edge of the label stock and the container guides for each job using the position scale.

5. Once the container guides are in the correct position use the thumbscrews to secure them in place.

***Note**: Guides can be removed and swapped to accommodate narrower containers. To accomplish this it is only necessary to remove one of the guides. See Section 6 for instructions.*

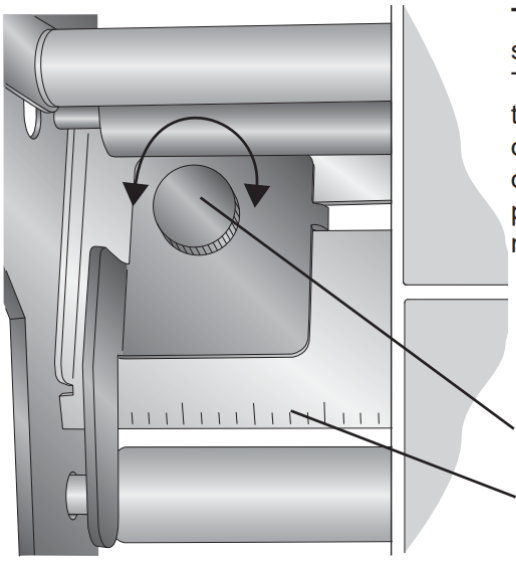

Tip! If the label stock covers the Thumb Screw, try using the other guide and/or moving the position of the roll.

Important Note: For bottles with a neck, such as soda, beer, or wine bottles, only one container guide can be used. Move the unused container guide to the far right or left side of the labeling area. For cans or other containers that do not have a tapered neck, both container guides can be used, if desired.

6. With the container in place, move the container pressure arm right or left until it is roughly centered on the container. Push down on the arm until the roller on the end of the arm touches the container. Remove the container. Push down the arm approximately 1/2 inch more. Attempt to place the container back on the rollers. The goal is to easily be able to place the container, yet still have sufficient downward pressure on the container. This downward pressure is more important for smaller, lighter containers such as pill bottles. The container pressure arm is optional for heavier containers such as wine bottles.

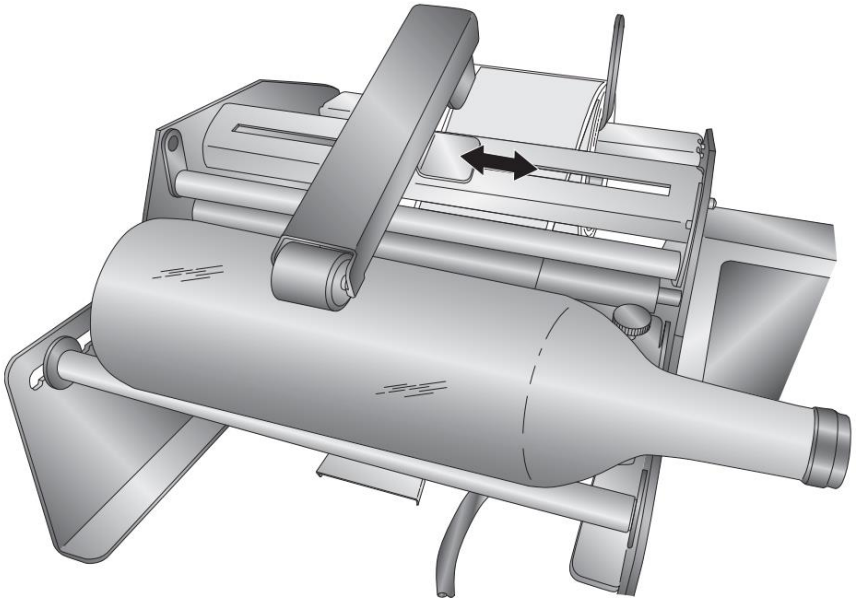

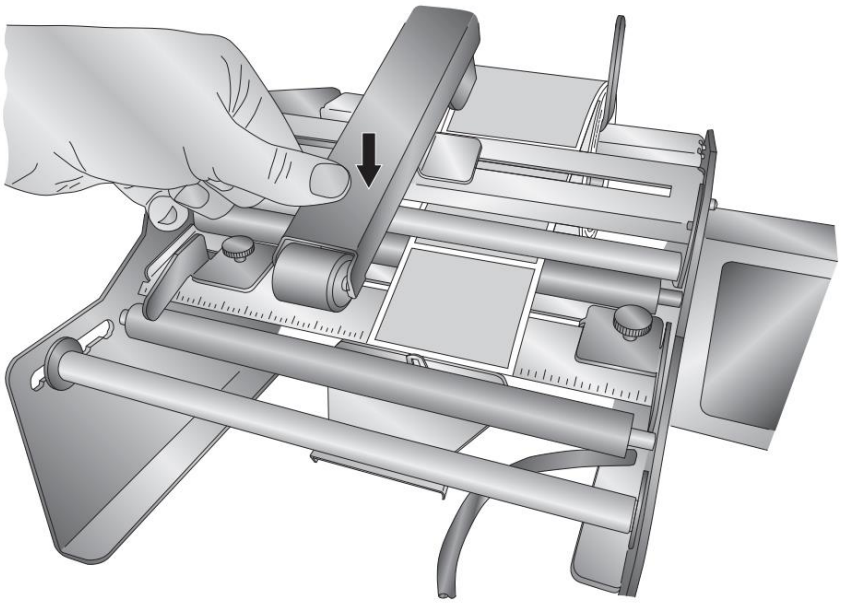

Section 4: Applying the Label

4A. Apply the Label

1. Power on the label applicator using the power switch. This can be done at any point with or without the container in place.
2. Place the container on the rollers using the instructions in Section 3.

   Important Note: *For label stock 6" and wider, it may be necessary to reduce the speed of the label applicator. The AP380 includes a half-speed mode that generates more torque from the motors for wider label stock. To activate this mode, hold down the foot switch while switching on the unit. The AP380 will revert back to the default mode when switched on without holding down the foot switch.*

3. Press the foot switch to apply the label.
4. Remove the container. Depending on the mode setting the rollers will continue to spin the container for a specified distance after each application. If you need to make an adjustment, do so now.
5. Place the next container on the rollers and press the foot switch.
6. Continue this process until all containers are labeled.

4B. Apply Two Labels to the Same Container

The AP380 has the ability to apply two labels to the same container and you can adjust the distance between the labels using the control panel. Nine different distances can be saved in the unit's memory. These distances are represented by nine different memory locations: L1 - L9. (L0 represents the single-label application mode.) By choosing the desired memory location/distance you can easily switch between multiple double-label containers without having to readjust label distances.

Follow this procedure to apply two labels to each container:

1. Press the "Mode" button once to display the current memory location.

2. While in the memory mode, press the "Recall/Reset" button repeatedly to move to the desired memory location (L1 - L9). (Press Recall/Reset repeatedly to move back to L0 for single-label mode.) ***(Figure 4-1.)***

Figure 4-1.

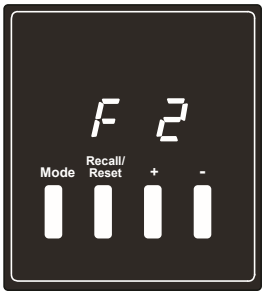

3. The desired memory location (L1 - L9) will be displayed for 2 seconds, followed by the current value set for that memory location for another 8 seconds. During this time, press the "+" or "-" button to adjust the distance value to be set for this memory location. ***(Figure 4-2.)***

   Hold down a button to move more quickly through the values. Once a value is selected, it will be displayed for 8 seconds and then stored in memory. The screen will then revert to label counter mode. The distances are displayed in inches. The unit accepts values between 0.01 and 9.99 inches [0.3 mm and 253.7 mm].

Figure 4-2.

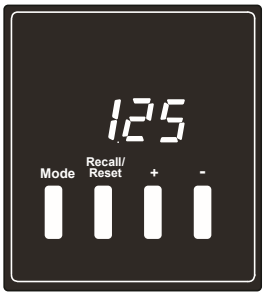

4. Press the foot switch to apply the labels. Both labels will be applied without pressing the foot switch again. To set a value for another memory location, repeat this procedure.

Note: *The distance values are approximate. Adjusting the position of the container idler roller will affect the actual distance between the labels on the container.*

4C. Calculate Distances for Two-Label Mode

If you intend to apply two labels to the same container you will typically want to center the second label so that you have the same distance between each label on both sides. Use this formula to calculate the proper distance setting (see Section 4B).

1. First calculate the circumference of your container.

   diameter of container x Pi = circumference

2. Now subtract the width of both front and back labels from the circumference and divide by two.

   (**circumference - width of front label - width of back label) / 2**

3. Subtract the distance between the labels on the liner (the distance between the labels while they are still attached to the roll) from the value received in step 2.

Example:

If your bottle is 3 inches in diameter, your front label is 4 inches wide, your back label is 2.5 inches wide, and the distance between the labels on the liner is 0.12 inches, the distance value to enter would be 1.34 inches.

3 x π = 9.42

(9.42 - 4 - 2.5) / 2 = 1.46 - 0.12 = **1.34**

Note: The value given by this formula is a good starting point. Some adjustments may be needed depending on the particular container and the Container Idler Roller position.

4D. Count Labels (AP380 only)

Figure 4-3.

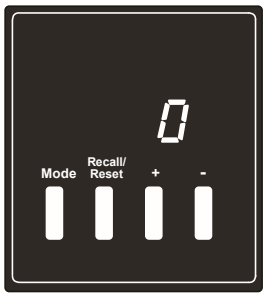

By default the AP380 label applicator will begin to count labels. This count will be displayed on the LCD. If you press any of the buttons on the control panel the label count will momentarily disappear. It will reappear ten seconds after the button is pressed. ***(Figure 4-3)***

Press and hold the “Recall/Reset” button for five seconds to reset the label counter to zero.

Note:*The label counter value will be retained if power is switched off.*

Section 5: Settings Overview

5A. Application Speed

High-Speed Mode (default): 5.6 in. [15.2 cm] / second

This mode is used for the most common labels. Labels 6 in. [15.2 cm] or wider or labels with very aggressive adhesive may cause motor stalling. If you experience motor stalling, switch to High-Torque Mode.

High-Torque Mode: 3 in. [7.6 cm] / second

This mode provides more motor torque to handle larger supply rolls and the most peel-resistant labels. To activate High-Torque Mode, hold down the foot switch while switching on the unit. To switch back to High-Speed Mode, hold down the foot switch again while switching on the unit.

5B. Label Counter Mode

By default, your applicator will display the number of labels applied. This value will temporarily disappear when viewing or changing other modes, but the current value will be redisplayed automatically. To reset the value to "0", press and hold the "Recall/Reset" button for 5 seconds.

5C. Label Application Modes

Press "Mode" button once to display current label mode (designated by *L* on display). Use "Recall/Reset" button to select number (0-9).

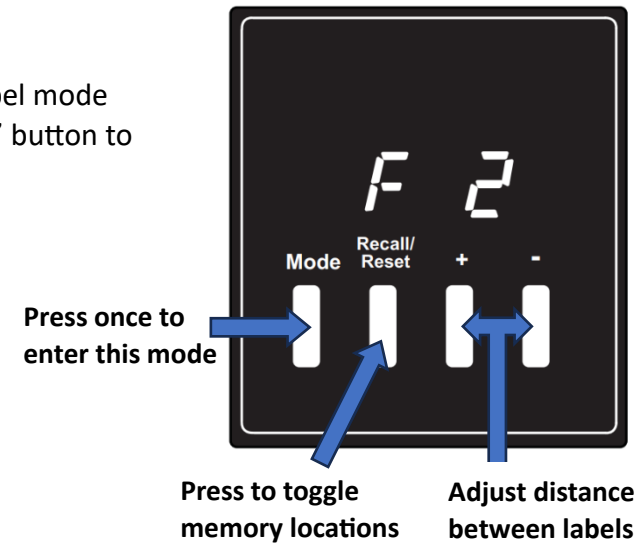

Single-Label Mode: *L 0* displayed

In this mode, one label is applied when the foot switch is depressed. After selecting label mode "0" and waiting 2 seconds, the unit will store this setting and revert back to Label Counter Mode.

Double-Label Mode: *L 1 – L 9* displayed

In this mode, two labels are applied when the foot switch is depressed. The number displayed represents a discrete memory location which will be shortly followed by a corresponding number indicating the distance between labels in inches or centimeters, depending on the current unit of

measure. Use “+ / -” buttons to adjust the distance for that memory location. After 8 seconds, the unit will store the mode and setting and the display will revert back to Label Counter Mode.

5D. Container Roller Modes

Press “Mode” button twice to display current container roller mode (designated by *C* on display). Use “Recall/Reset” button to select number (0-9). After selecting the desired container rolder mode and waiting 8 secondes, the unit will store the mode and setting and the display will revert back to Label Counter Mode.

Immediate Stop Mode: *C 0* displayed. This mode stops the container immediately after label application.

Delayed Stop Mode: *C 1–8* displayed. Use this mode if you wan to printer on the label or container using an accessory printer. (not included) Rotation after application is usually required to locate printing where desired.

The number displayed indicates the rotation distance after label application (after the second label in Double-Label Mode). Each unit equals 4.3 inches [10.9 cm]. For example: After the entire label is applied, *C 2* rotates the container roller 8.6 in.

[21.8 cm] before stopping.

Demo Mode (continuous rotation): *C 9* displayed.

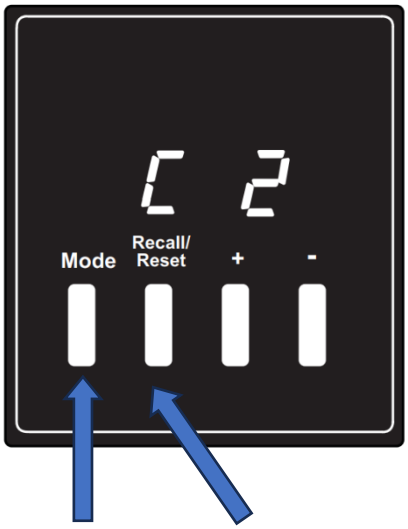

Press 2x to Enter this mode

Press to add rotation distance after application

5E. Units of Measure

English (inches)

In this configuration “-” will be the first digit of the firmware version displayed during unit start up. To change to English from metric, press and hold “Mode” and “+” buttons simultaneous while switching on unit.

Metric (centimeters)

In this configuration “=” will be the first digit of the firmware version displayed during unit start up. To change to metric from English, press and hold “Mode” and “-” buttons simultaneous while switching on unit.

Section 6: Label Path Diagram

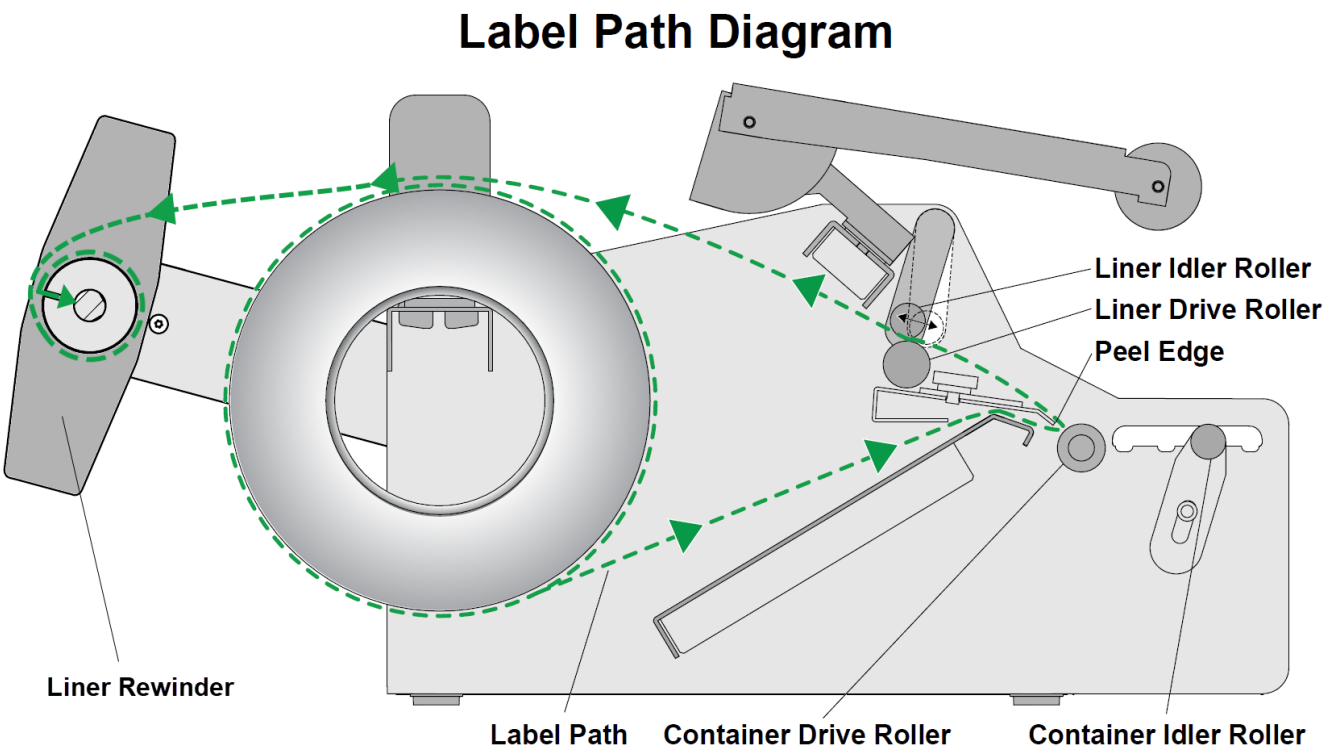

Section 7: Troubleshooting and Maintenance

7A. Troubleshooting

Tapered bottles. KnowledgeBase Article

Many wine bottles have a slight taper to them. Using the normal procedures outlined in the manual will cause the labels to be applied crooked. You may be able to apply your label straight if you angle the container idler roller to correspond with the angel of the taper. For example, if you normally apply labels to the bottle with both sides of the container idler roller in the third notch from the drive roller, try putting one side in notch three and the other side in notch four.

Motor stalling on labels 6" (15.3 cm) or wider.

For label stock 6 in. [15.3 cm] and wider, it may be necessary to reduce the speed of the Label Applicator. The AP380 includes a half-speed mode that generates more torque from the motors for wider label stock. To activate this mode, hold down the foot switch while switching on the unit. The A380 will revert back to the default mode when switched on without holding down the foot switch.

AP380 is running slow.

See Section 5A. Make sure the foot switch is not depressed at any time during the boot up sequence.

Small diameter containers.

Small containers such as lip balm containers which are close to the minimum allowed diameter specification (0.6 in.) will occasionally get pushed off the rollers by the oncoming label. To solve this problem add pressure to the arm by hand while applying labels on extremely small containers. This will prevent the label from pushing the container off the rollers.

There are bubbles or wrinkles in the label. KnowledgeBase Article

Wrinkles or bubbles can appear on the applied label if the container is not completely round, is not smooth, or has bumps or ridges. To minimize bubbling or wrinkling with such bottles, smooth the labels by hand as the container rotates after label application. For this procedure you must apply labels with out using the container pressure arm.

Label edges fold over, catch, or tear on the sensor as they are applied to the container.

[KnowledgeBase Article]

How should label stock rolls be wound to work with the AP380?

Copy Position Options, Labels Wound

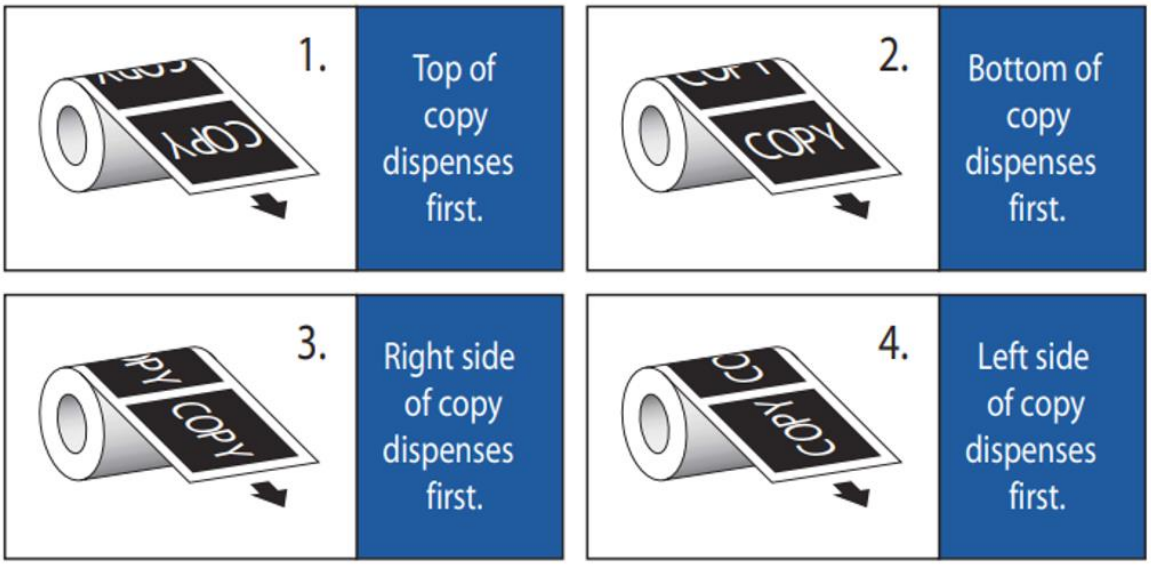

Important Note: The roll is loaded to feed from the bottom as shown

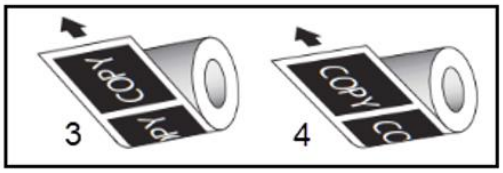

7B. Maintenance

Unclamp Liner Idler Roller

When not in use, leave the liner idler roller in the unclamped position. This will minimize the possibility that permanent indentations will be made in the liner drive roller.

Lubricate Bearings

Primera recommends oiling the four bearings associated with the liner drive roller and liner idler roller. Oil these four bearings after every 50,000 containers labeled. They should only be oiled after the first 50,000 containers as they are lubricated with a special grease at the factory. One drop of any machine oil or motor oil for each bearing should be adequate. This maintenance is optional but will increase the life of the applicator for heavy users who apply hundreds of labels daily.

Increase Label Pressure Roller Clamp Force

Over time as the liner drive roller and its bearings wear, the clamp force of the liner idler roller against the liner drive roller will decrease and the roller may begin slipping on the liner. To compensate for this decrease in pressure you can adust the clamp force by moving the force adjustments screws on either side of the applicator to lower positions. To make this adjustment, use a #2 Phillips screwdriver. For each screw, rotate it counterclockwise one-half turn, slide it down in the slot, then retighten it. Both screws should be kept in the same relative position in their slot. If the screws are moved too far down in their slot, it will be difficult to clamp the linder idler roller. You may need to make this adjustment several times throughout the life of the applicator. If you reach the bottom of the slot the liner drive roller and bearings will need to be replaced.

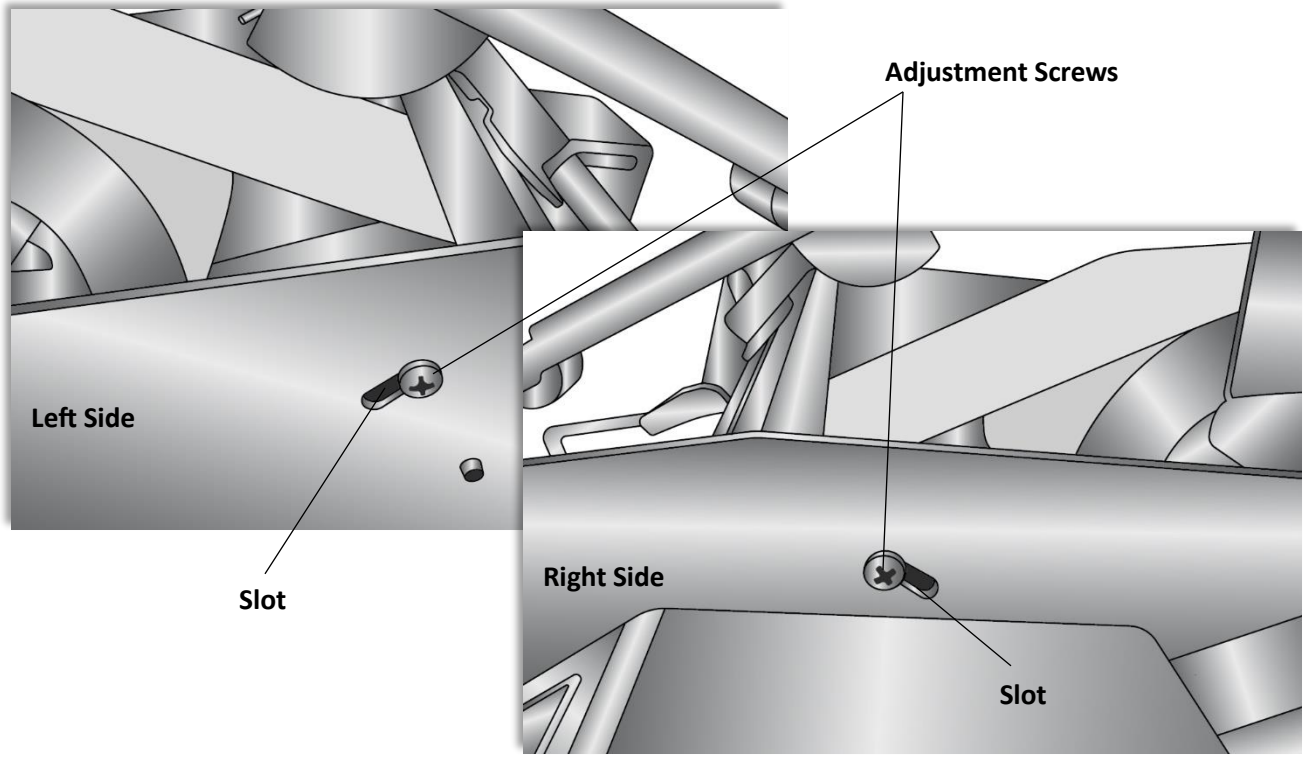

Swapping theLabel/Container Guide Positions to Accommodate Narrower Labels

You can swap the positions of the container guides or the label guides to allow the guides to be moved closer together to accomodate shorter containers or narrower labels.

Label Guide Instructions

1. Loosen one of the thumbscrews until it is removed. Hold your hand underneath the guide plate to catch the nut as it falls.
2. Move the label guide to the other side of the other label guide and place it back onto the guide plate with the location tab in the slot.
3. Place the nut on the underside of the guide plate so that the locator tab is closest to the locator tab on the label guide.
4. Insert the thumbscrew and turn clockwise until it is tight.

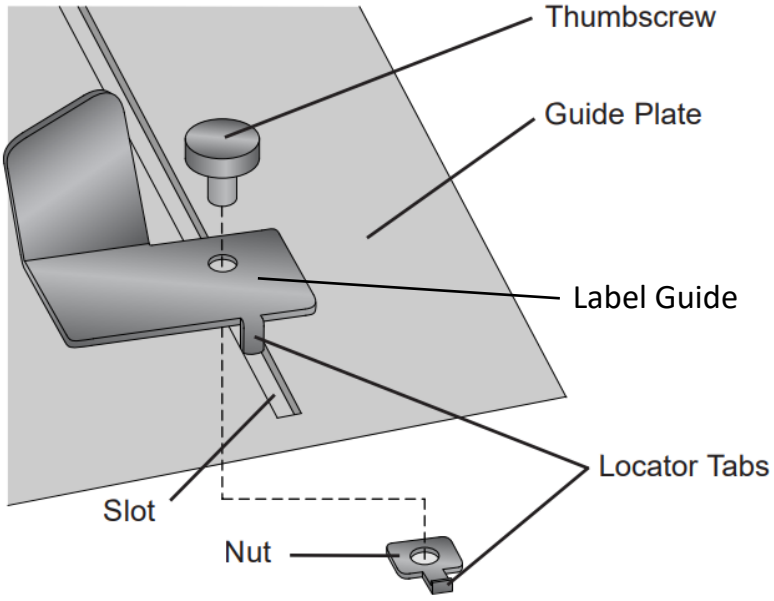

Container Guide Instructions

1. Move one of the container guides to the far outside of its travel. Loosen the thumbscrew until it is removed. Hold your hand underneath the guide plate to catch the nut as it falls. **Access to the underside is only available at either end of the guide plate.**
2. Move the remaining container guide to the other side of of the other container guide and place it back onto the guide plate with the locator tab in the slot.
3. Place the nut on the underside of the guide plate so that the locator tab is closest to the locator tab on the label guide.
4. Insert the thumbscrew and turn clockwise until it is tight.

Clean Label Gap Sensor Flag [KnowledgeBase Article]

Over time adhesive from the labels can build up on the sensor flag just above the container rollers. Periodically clean the top of the sensor flag with a Q-tip and alcohol.

Adjusting Rewinder Torque

If you find than the rewinder is pulling the liner out of the guide slots, reduce the torque by turning the shaft counterclockwise. If you find that the liner wrap on the guide rollers is too loose, increase the the torque by turning the shaft clockwise. Adjust the torque in small increments of a quarter turn at a time by holding the wrench in place on the torque adjustment nut and turning the rewinder shaft.

Warning: Do not tighten the nut to its stop in either direction.

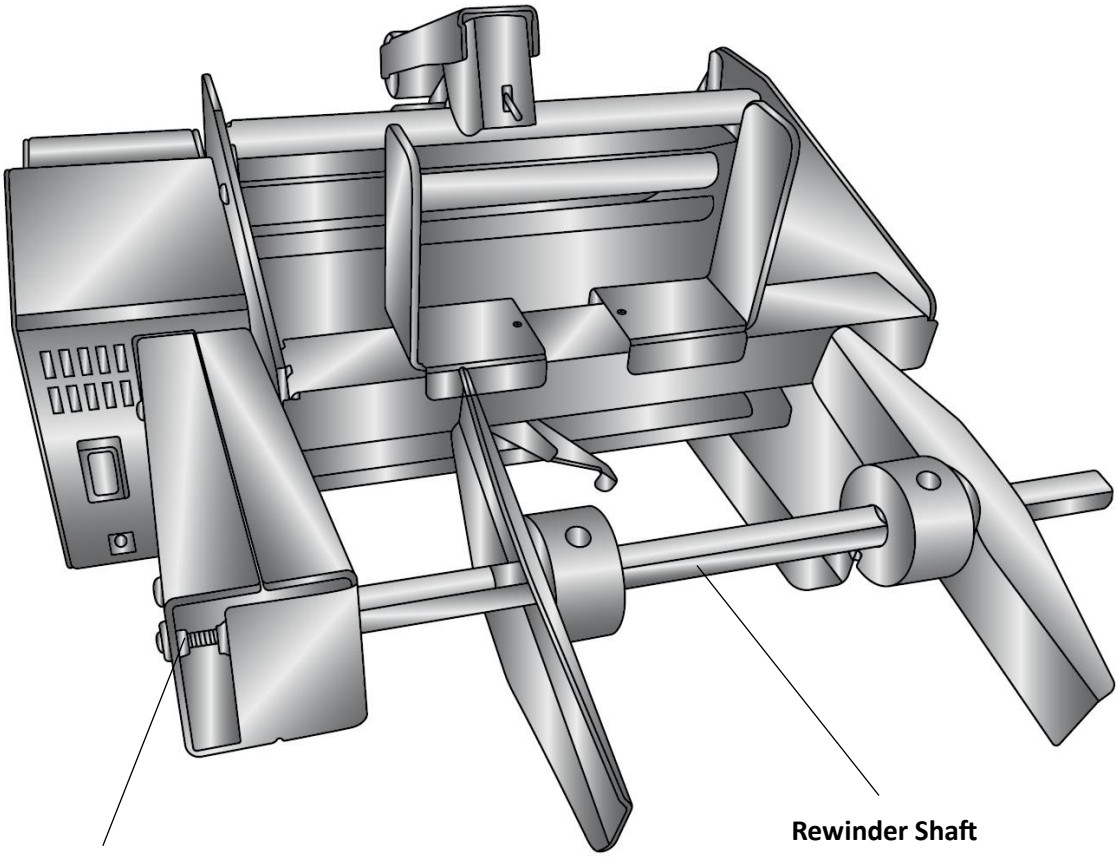

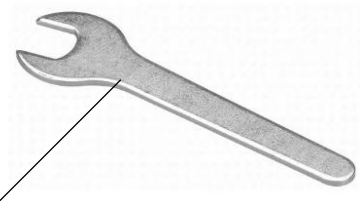

Section 8: Specifications

Container width:	1" to 9.4" (25mm to 238mm)
Container diameter:	0.6" to 6.7" (15mm to 170mm)
Container shape:	Cylindrical and many tapered
Supply roll diameter:	Up to 8" (203mm)
Media liner width:	1" to 8.375" (25mm to 213mm)
Supply roll core I.D:	2" to 3" (51mm to 76mm)
Electrical rating:	12 VDC, 5 A
Power requirements:	100-240 VAC, 50/60 Hz, 60 watts
Feed speed:	5.6 in/sec in default mode
	3 in/sec in half-speed mode for 6” to 8" wide labels
Agency certifications:	UL, UL-C, CE, FCC Class B
Weight:	16 lbs (7.3 kg)
Dimensions:	13.4" W x 8.9" H x 20.0" D [340mm W x 226mm H x 508mm D]
Label width:	0.75" to 8.25" [19mm to 210mm]
Label height/length:)	0.75" to 24.00" [19mm to 610mm]
Liner thickness:	2 mil - 10mil*
Label + adhesive thickness:	5 mil - 15 mil**

***Important Note:** A liner that is too slippery or too thin will slip on the drive roller. Clear liners are usually the most problematic. We recommend a semi-bleached super-calendered kraft liners with the following specs:

Basis Weight	**48# per ream ± 10% (500 24" x 36" sheets)**
Caliper:	0.0028 inches
Tensile:	MD: 42# per inch width, CD: 16# per inch width

****Important Note:** Pliability/flexibility/rigidity of the label is also a factor. If the label is too flexible, no matter the thickness, it can get caught on the sensor flag. Polypropylene, polyester and vinyl labels tend to be more flexible. It is HIGHLY recommended that the stock and container be tested on the applicator before making any label stock purchase decisions.

Section 9: Certifications and Environmental Policy

EMC: Class B

Human operator intervention is acceptable for this product in an ESD event. This means it is possible that static electricity may be discharged when touching the screen, which may restart the tablet.

FCC:

NOTE: This equipment has been tested and found to comply with the limits for a Class B digital device, pursuant to part 15 of the FCC Rules. These limits are designed to provide reasonable protection against harmful interference when the equipment is operated in a commercial environment. This equipment generates, uses, and can radiate radio frequency energy and, if not installed and used in accordance with the instruction manual, may cause harmful interference to radio communications. Operation of this equipment in a residential area is likely to cause harmful interference, in which case the user will be required to correct the interference at his own expense.

Environmental Policy

The European Union (EU) has developed the WEEE (Waste Electrical and Electronic Equipment) Directive (WEEE Directive 2012/19/EU) to ensure that systems for collection, treatment, and recycling of electronic waste will be in place throughout the European Union.

Electrical and electronic equipment (EEE) contains materials, components, and substances that may be hazardous and present a risk to human health and the environment when waste and electronic equipment (WEEE) is not handled correctly.

Equipment marked with the below crossed-out wheeled bin is Electrical and electronic equipment (EEE).

The crossed-out wheeled bin symbol indicates that the product is EEE and must be collected separately, in accordance with the WEEE Directive 2012/19/EU.



Users of EEE must not discard WEEE together with household waste. Users must follow local recycling regulations to reduce adverse environmental impacts in connection with disposal of WEEE and to increase opportunities for reuse, recycling, and recovery of WEEE. As a user of this EEE, you have an important role in recycling this equipment and contributing to the protection of the environment and the conserving of natural resources.

When a product reached its end of life, contact us at environment@primera.com or +1-763-475-6676 to arrange its recycling. Primera will work with you to arrange for the recycling of the product.