Anker SOLIX F3800 Portable Power Station USER GUIDE (A1790)

What's in the Box
Overview
Product Overview
LCD Screen Guide
Recharging Your Power Station
AC Recharging (2990W Max)
Solar Panel Recharging (2400W Max)
Car Recharging (120W)
Powering On / Off
Powering Your Devices
AC Charging
USB Charging
Car Socket Charging
Uninterruptible Power Supply (UPS)
Connect With an Expansion Battery
Anker App for Smart Control
Light
Carry Your Power Station
FAQ
Specifications

What's in the Box

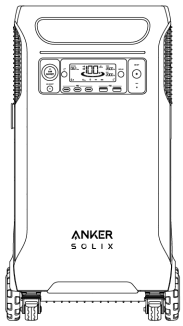

Anker SOLIX F3800 Portable Power Station



AC Charging Cable

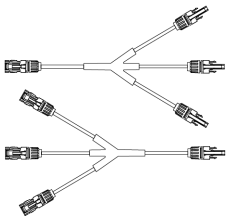

MC4 Solar Charging Cable



Important Information

Overview

Product Overview

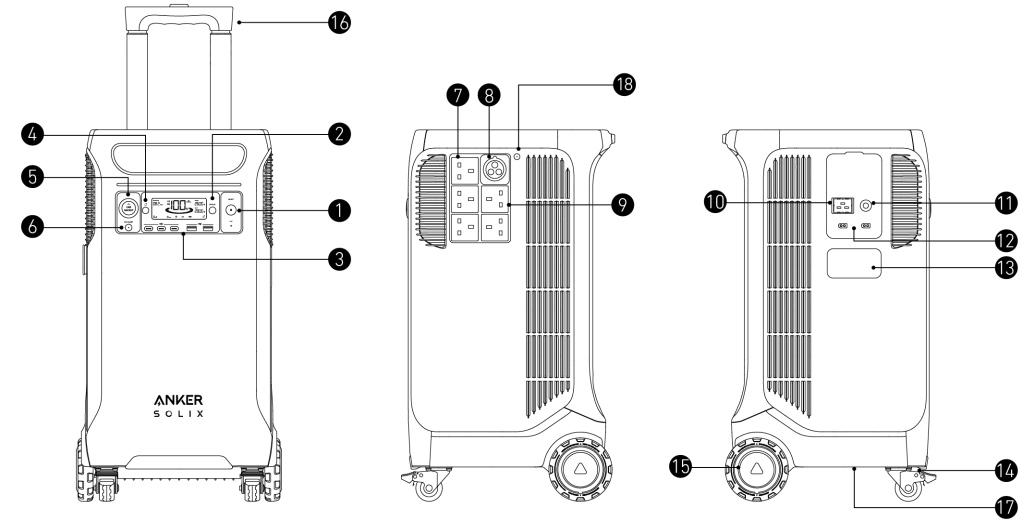

❶	On/Off Button	❷	Display Button
❸	USB Ports	❹	IoT Button
❺	Car Socket	❻	Car Socket Button
❼	EV Port	❽	16A AC Output Port
❾	13A AC Output Ports (The four ports below with UPS function)	❿	AC Input Port
⓫	Overcharge Protection (AC Input)	⓬	Dual Solar Input and Car Input
⓭	Expansion Battery Port	⓮	Wheel Brake
⓯	Wheels	⓰	Retractable Handle (Press the button on the retractable handle and pull to extend)
⓱	Bottom Handle	⓲	AC Outlet Button

LCD Screen Guide

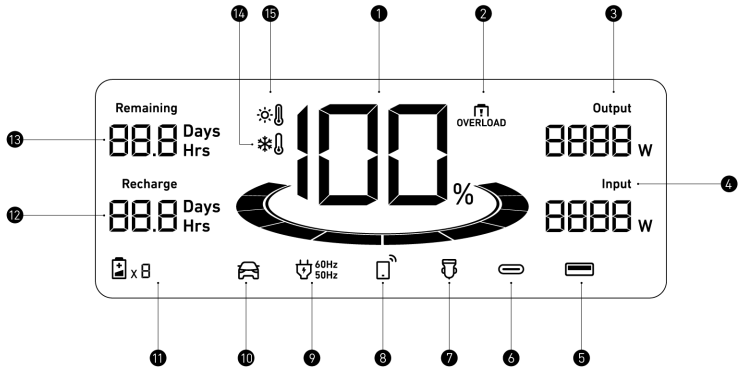

❶Remaining Battery for Power Station and Expansion Battery
❷Overload Warning
This icon appears when a port is overloaded. The port will turn off to avoid any damage. Please remove the device causing overload.
❸Current Output Power
❹Current Input Power
❺USB-A Output Port
❻USB-C Output Port
❼Car Charging
❽IoT
Press the IoT button for 2 seconds and connect your devices through the app when this icon appears on the screen.
❾AC Charge and Voltage Frequency
❿Electrical Vehicle Charging
⓫Number of Expansion Battery Connected
When the expansion battery is connected successfully, this icon appears on the screen.
⓬Estimated Time to Fully Recharge
⓭Estimated Time for Battery to Deplete
⓮Low-Temperature Alert
When this icon shows, stop using the power station until the icon disappears.
⓯High-Temperature Alert
When this icon shows, stop using the power station and let it cool down until the icon disappears.

Recharging Your Power Station

When your portable power station only has 1% battery remaining, the "Remaining Battery" indicator will flicker to remind you to recharge.

AC Recharging (2990W Max)

Recharge your power station by connecting to a wall outlet with the AC charging cable.

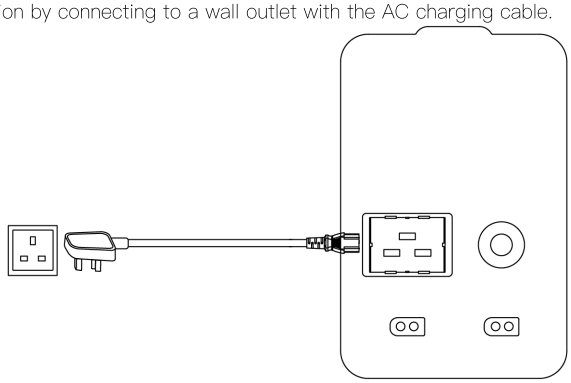

Solar Panel Recharging (2400W Max)

Recharge your power station with a maximum solar input of 2400W.

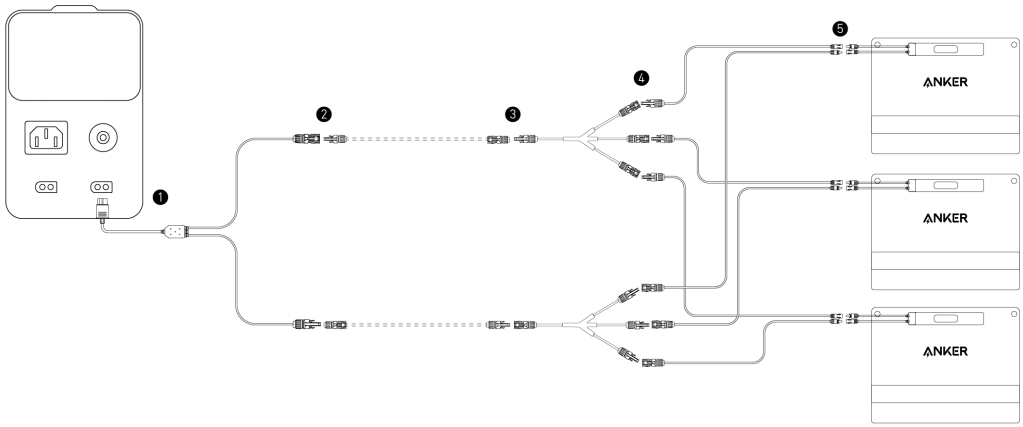

*If the solar panel is far from the power station, you can purchase the Anker SOLIX Solar Panel MC4 Charging Cable as an extension cable from Anker's official website, and connect it to the part indicated by the dotted line in the diagram.

Car Recharging (120W)

Recharge your power station by connecting to a car's output port with the car charging cable (not included).

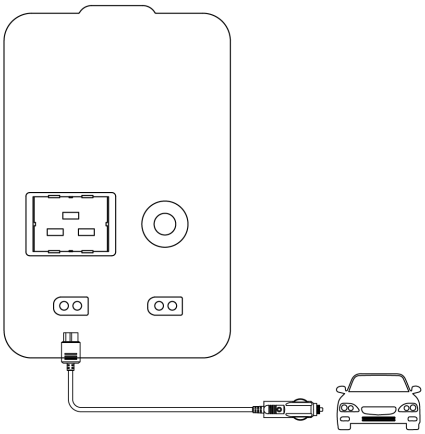

Powering On / Off

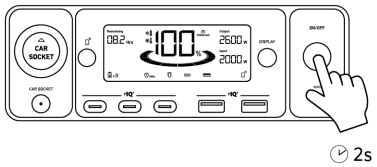

Press the ON/OFF button for 2 seconds to turn your power station on or off.
When the "Remaining Battery" indicator shows on the LCD screen, your power station is ready to charge devices.

- When powered on, press the Display button to turn the screen on or off.
- The auto-off time can be set in the Anker app.
- The power station will power off automatically if the output buttons are turned off and no power loads are detected for 12 hours. The standby duration can be set in the Anker app.

Powering Your Devices

AC Charging

Press the AC outlet button and connect your device to the AC output ports.

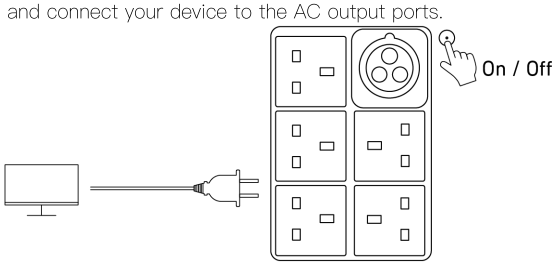

Double-click the AC outlet button, wait until the car icon appears on the screen, then connect your EV charge to the EV port.

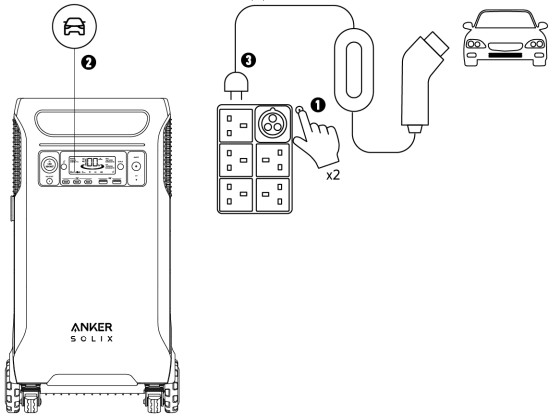

USB Charging

Connect your devices to the USB ports.

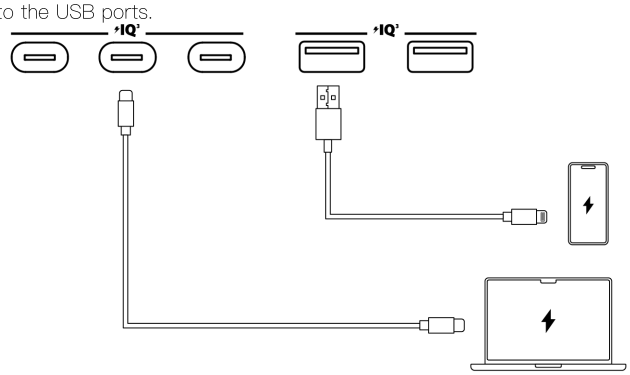

Car Socket Charging

Turn on the car socket and connect your devices to start charging.

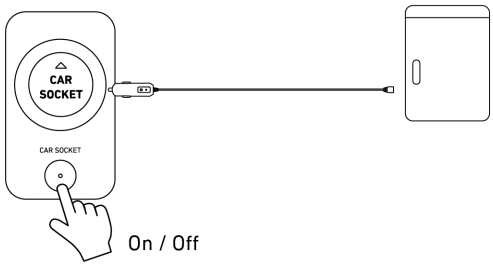

Uninterruptible Power Supply (UPS)

To use the UPS feature, connect your power station to a wall outlet with the AC charging cable, then press the AC outlet button and connect your devices via the AC output ports.

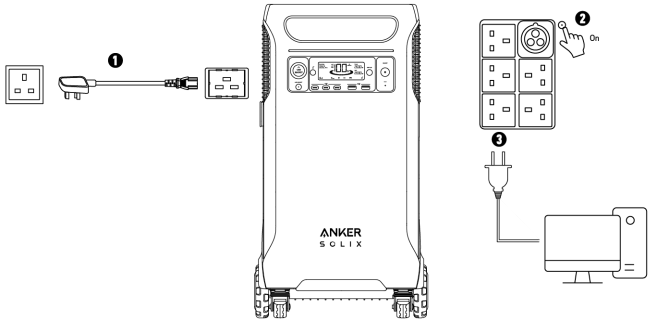

Connect With an Expansion Battery

Your power station can be connected with expansion batteries to increase the capacity up to 26,880Wh. Please refer to the user manual of Anker SOLIX BP3800 Expansion Battery for detailed instructions.

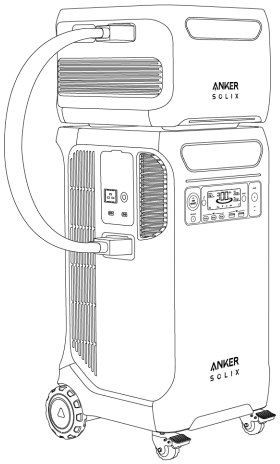

Anker App for Smart Control

You can remotely control your power station using the Anker app.

1. Download the Anker app from the App Store (iOS devices) or Google Play (Android devices), or by scanning the QR code.

2. Connect the device to a network before using the app for the first time. After connecting successfully, you can connect your device off-grid.
3. Firmware update: You will be informed once a new firmware version is detected when you connect the power station to the app. During the update, ensure the power station is being charged and connected to Wi-Fi.

Light

Turn ON/OFF the light on Anker App.

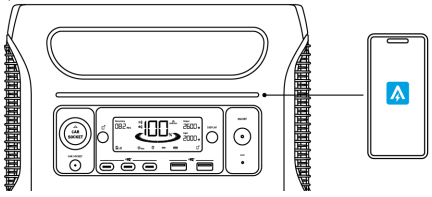

Carry Your Power Station

1.Lay the power station flat.

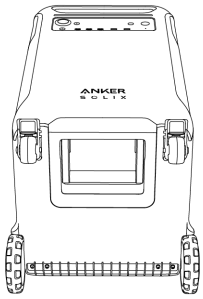

2.Open the bottom folding handle.

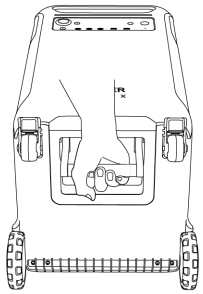

3.Grab the bottom and top handles to lift the power station.

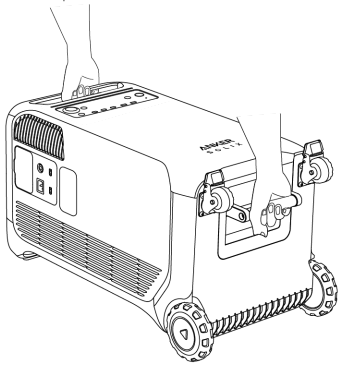

FAQ

Q1: What is the maximum power output of the AC output ports?

The AC output ports can deliver a maximum of 6000W to connected devices.

Q2: What should I do when using a solar charger to charge my power station?

The solar input supports an 11–60V solar charger with an XT–60 connector. If you use an 11–32V solar charger, the current supports 10A max. When you use a 32–60V solar charger, the current supports 25A max.

Q3: Can the USB–C ports charge the power station (input only), or are they output only?

The USB–C ports support output only.

Q4: What should I do when AC recharging fails?

If AC recharging does not work, check if the overload protection switch is turned on. If it is on, press down to reset and then continue recharging.

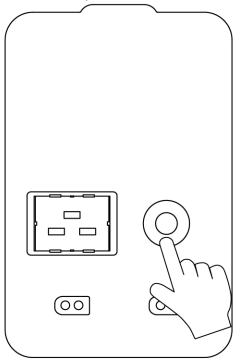

Q5: How do I reset my power station?

If your power station is not working correctly, insert a paper clip or pin into the reset hole for 1 second for a factory reset. If the power station still doesn't work, please contact support@anker.com.

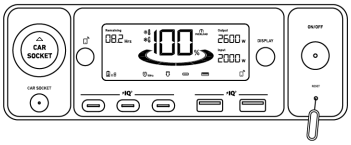

Q6: Why is the power station not working after it hasn't been used for a long time?

If the power station is stored at a low capacity for a long time, lithium batteries will self–consume power, which may lead to a quick discharge. This often leads to poor conductivity and a reduced battery lifespan that causes the battery not to work.

Q7: How should I store and maintain the power station?

When storing your power station, please make sure that you:

1) Turn off the main power button.

2) Store the power station in a dry and cool environment.

3) Check the remaining battery capacity each week. If the battery level is below 30%, fully charge the power station. Do not forget to charge it to 100% once every 3 months.

Specifications

Battery Type	LiFePO4 Cell

Cell Part Number	32140FS-15000mAh
Cell Number	80
Cell Capacity	51.2Vdc 75Ah/3840Wh
AC Input	220V-240V~ 13A Max, 50Hz, L+N+PE
AC Input Power (Charging)	2990W Max
AC Input Power (Bypass Mode)	L+N+PE, 2990VA/2990W Max
Solar Panel Input	11-32V⎓10A; 32V-60V⎓25A (1200W Max Each)
Car Charger Output	12V⎓10A
AC Output Power (Total)	6000W Max
AC Output 1	230V~ 13A Max, 50Hz
AC Output 2	230V~ 16A Max, 50Hz
USB-A Output	5V⎓2.4A (12W Max Per Port)
USB-C Output	5V⎓3A / 9V⎓3A / 15V⎓3A / 20V⎓3A / 20V⎓5A (100W Max Per Port)
UPS	20ms
Discharging Temperature	-20°C-40°C
Charging Temperature	0°C-40°C
Size	70.2×38.8×39.5 cm
Net Weight	60 kg