NYQUIST™



NQ-S1810WBC Nyquist VoIP Wall Baffle Combo Speaker with Integrated LED Message Display and Flasher

Installation and Use Guide

BOGEN®

Specifications are subject to change.
© Copyright 2024, Bogen Communications LLC
740-00219A 240401

With the Nyquist Series VoIP Wall Baffle Combo Speaker with LED Message Display and Flasher (WBC), there is no need to manually set or adjust external amplifiers, traditional intercom wiring, or transformer taps. Connect the speaker via a Cat 5 or higher cable to a Power-over-Ethernet (PoE or PoE+) switch or injector and it's ready to use.

The WBC features an integrated 10W power amplifier; a CAN bus interface; a MEMS microphone for superior talk-back audio; an integrated LED message display; an LED flasher for visual announcement notifications; and a Form C SPDT-type 2A dry contact relay for controlling or overriding third-party devices like audio-visual sources.

The WBC also allows DHCP deployment for easy installation. You can let your Nyquist server automatically discover and configure your speaker, or you can manually configure it through the speaker's web-based user interface (web UI). The web UI also makes it easy to update firmware, set parameters for Digital Signal Processing (DSP), and customize text on the integrated LED display. For more information about the web UI, refer to the *Nyquist Gen-3 VoIP Speakers Configuration Guide*.

Speaker Layout

The layout of the speakers should be planned prior to installation.

Because wall baffle speakers are designed to project forward, it is best to aim them all in the same direction, as this provides for greater coverage and clarity. You can use the building's roof pillars or other available supports for mounting the wall baffles.

In some cases, it may be necessary to mount the wall baffles on opposing walls. In these cases, the speakers will project sound in opposing directions.

Hallway

Wall baffle speakers work well with rooms and hallways that are 20' to 60' wide. Layout starts at one end of the hallway or room. The first speaker should be installed 10' from the end of the hallway or room. The next speaker on that wall should be installed 20' from the first speaker. Each additional speaker should be installed 20' apart from the previous one. The first speaker on the opposing wall should be installed 20' from the end of the hallway or room, thereby staggering the speakers. Each additional speaker should be installed 20' apart from the previous one (see **Figure 1**).

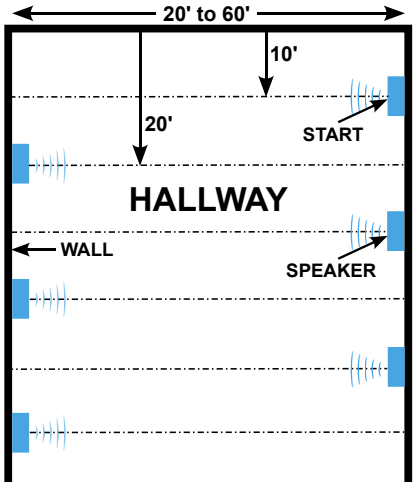

Figure 1: Hallway speaker layout.

Rooms

In most cases, an environment, such as a classroom, requires only a single wall baffle speaker to service the entire room. The final placement of the speaker within the room can vary, but such common area locations as at the head of the room or near the room entrance are typically chosen (see **Figure 2**).

Based on the speaker position that has been selected, you can choose between several mounting options, as described below.

Speaker Installation

1. The speaker is packaged with the baffle attached to the enclosure, a grille, and two flush-mount brackets. Remove the four screws that attach the speaker bezel to the enclosure, then remove the cardboard insert from inside the enclosure, as shown in **Figure 3**.
2. Select a mounting option from **Figures 4–7** and use the appropriate hardware for gang-box mount or wall mount. Bogen provides the screws and washers for mounting on a standard electrical gang box, but when mounting directly to a wall or other surface, you must supply the appropriate hardware for the specific wall/surface construction type (e.g., concrete cinder block, metal beams, etc.).

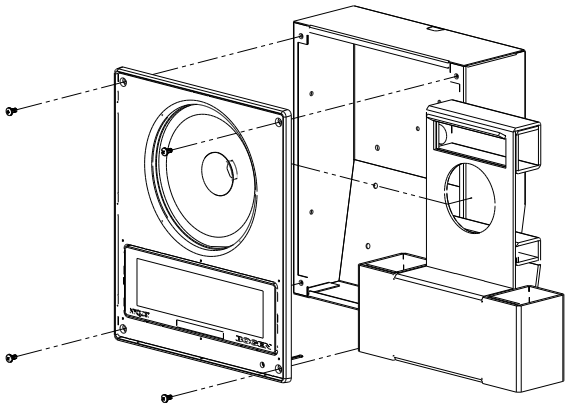

Figure 3: Remove cardboard insert from enclosure.

***NOTE**: The wall mounting of the NQ-S1810WBC should be conducted by trained professionals with sufficient knowledge and tools to fit the wall-mount fasteners in a reliable way.*

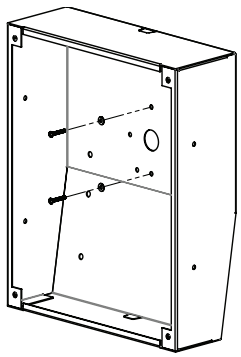

Figure 4: #6 screws and washers for mounting to gang box.

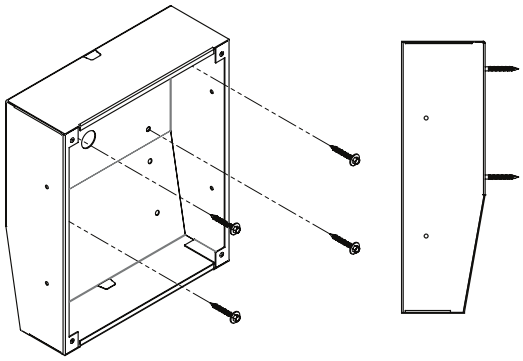

Figure 5: Flat wall mount (hardware not supplied; tapping screws for concrete/brick shown)

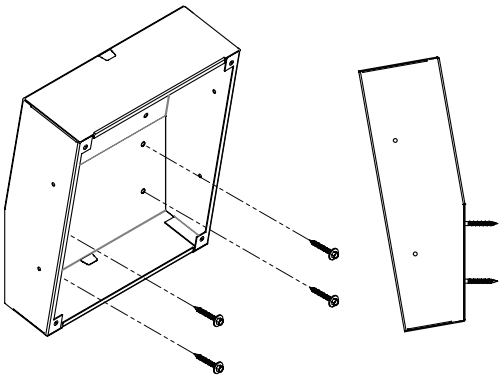

Figure 6: Angled wall mount (hardware not supplied; tapping screws for concrete/brick shown)

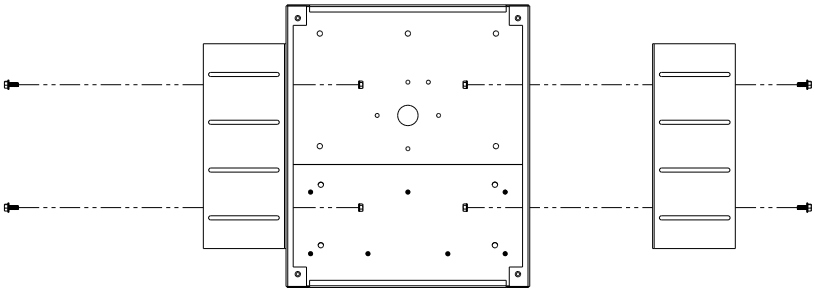

Figure 7: Flush mount (hardware supplied).

3. When applicable, use the pluggable CAN bus connector to attach one or more NQ-E7020-G2 Digital Call Switches to the Nyquist VoIP Module 820-00187-00 via the NQ-S1810WBC's smart display connectors, as shown in **Figure 8**.
4. If the CAN bus is to be used, ensure the CAN_H and CAN_L use Cat 5 10/100 twisted pair cable.
5. To connect a third-party device to the dry contact relay output, do one of the following:
   a. If the device is looking for a Normally Open contact, connect the device using the NO and COM terminals.
   b. If the device is looking for a Normally Closed contact, connect the device using the NC and COM terminals.

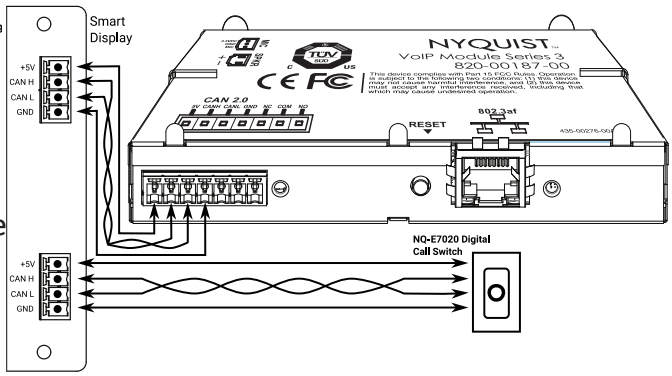

Figure 8: CAN bus connector with multiple digital call switches

***NOTE**: Use of relay contacts is optional and only recommended for connection to 12V/24V circuits, not for 120/240 VAC mains circuits.*

6. Use Cat 5 or higher Ethernet cable to connect the speaker. The power is supplied by PoE or PoE+ using an 802.3af– or 802.3at–compliant network switch or injector.
7. Reattach the baffle to the enclosure with the four screws provided, then press fit the grille into the baffle as shown in **Figure 9**.

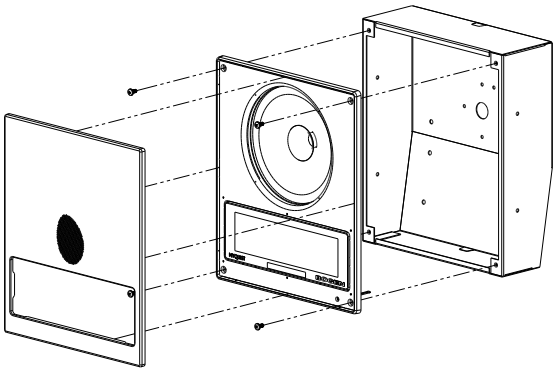

Figure 9: Attaching grille and baffle to enclosure.

Using the Reset Button

The Reset button (**Figure 10**) allows you to either reboot the VoIP speaker or reset the appliance's configuration settings to the factory default settings.

NOTE: Refer to the *Nyquist VoIP Speaker Configuration Guide* or the *Nyquist System Administrator Guide* for detailed instructions on how to configure these speakers.

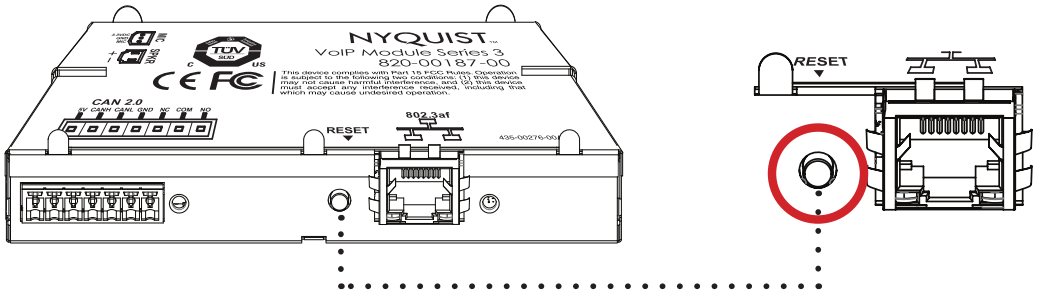

Figure 10: Location of the reset button on the CAN bus connector.

The maximum operating temperature for the NQ-S1810WBC is 35 °C.

Additional Accessories

The Nyquist VoIP Wall Baffle Combo Speaker can be used with the Nyquist Digital Call Switch NQ-E7020-G2. Refer to the *Nyquist Digital Call Switch NQ-E7020 Quick Start Guide*.

Compliance

NOTE: This equipment has been tested and found to comply with the limits for a Class A digital device, pursuant to Part 15 of the FCC rules. These limits are designed to provide reasonable protection against harmful interference when the equipment is operated in a commercial environment. This equipment generates, uses, and can radiate radio frequency energy and, if not installed and used in accordance with the instruction manual, may cause harmful interference to radio communications. Operation of this equipment in a residential area is likely to cause harmful interference; in which case, the user will be required to correct the interference at his own expense.

Limited Warranty, Exclusion of Certain Damages

The **NQ-S1810WBC** is warranted to be free from defects in materials and workmanship for five (5) years from the date of sale to the original purchaser. Any part of the product covered by this warranty that, with normal installation and use, becomes defective (as confirmed by Bogen upon inspection) during the warranty period will be repaired or replaced by Bogen, at Bogen's option, with new or refurbished product, provided the product is shipped insured and prepaid to: Bogen Factory Service Department: 4570 Shelby Air Drive, Suite 11, Memphis, TN 38118, USA. Repaired or replacement product(s) will be returned to you freight prepaid. This warranty does not extend to any of our products that have been subjected to abuse, misuse, improper storage, neglect, accident, improper installation or have been modified or repaired or altered in any manner whatsoever, or where the serial number or date code has been removed or defaced.

THE FOREGOING LIMITED WARRANTY IS BOGEN'S SOLE AND EXCLUSIVE WARRANTY AND THE PURCHASER'S SOLE AND EXCLUSIVE REMEDY. BOGEN MAKES NO OTHER WARRANTIES OF ANY KIND, EITHER EXPRESS OR IMPLIED, AND ALL IMPLIED WARRANTIES OF MERCHANTABILITY OR FITNESS FOR A PARTICULAR PURPOSE ARE HEREBY DISCLAIMED AND EXCLUDED TO THE MAXIMUM EXTENT ALLOWABLE BY LAW. Bogen's liability arising out of the manufacture, sale or supplying of products or their use or disposition, whether based upon warranty, contract, tort or otherwise, shall be limited to the price of the product. **IN NO EVENT SHALL BOGEN BE LIABLE FOR SPECIAL, INCIDENTAL OR CONSEQUENTIAL DAMAGES (INCLUDING, BUT NOT LIMITED TO, LOSS OF PROFITS, LOSS OF DATA OR LOSS OF USE DAMAGES) ARISING OUT OF THE MANUFACTURE, SALE OR SUPPLYING OF PRODUCTS, EVEN IF BOGEN HAS BEEN ADVISED OF THE POSSIBILITY OF SUCH DAMAGES OR LOSSES.** Some States do not allow the exclusion or limitation of incidental or consequential damages, so the above limitation or exclusion may not apply to you. This warranty gives you specific legal rights, and you may also have other rights which vary from State to State.

Products that are out of warranty will also be repaired by Bogen Factory Service Department — same address as above or call 201-934-8500, at owner's expense. Returned products which do not qualify for warranty service, may be repaired or replaced at Bogen's option with a previously repaired or refurbished items. The parts and labor involved in these repairs are warranted for 90 days when repaired by the Bogen Factory Service Department. All parts and labor charges as well as shipping charges will be at the owner's expense.

All returns require a Return Authorization number. For most efficient warranty or repair service, please include a description of the failure.

1/2024