GV-RU9003 UHF RFID Reader



Introduction

GV-RU9003 is a Radio Frequency Identification (RFID) reader of ISO18000-6C (EPC GEN2) standard. Designed for parking lot management, the reader can read RFID tags up to 10 m (33 ft) under optimal conditions.

Features

- Built-in antenna and RF module
- Effective identification with specially designed antenna pattern
- Compatible with access controllers using Wiegand 64 interface
- Effective range of up to 10 m (33 ft) under optimal conditions
- Special energy-saving design reducing power consumption
- Support for external sensors and controllers
- Electronic tag compliant with EPC Gen II (ISO18000-6C) standard
- R&D patent for EMI reduction
- FCC/CE certification

Packing List

- GV-RU9003
- L-Bracket
- Fixed-clamp
- U-clip
- Screws x 4
- DC Jack Power Cable
- Installation Guide
- Warranty Card

Notice

1. The product pattern is certified by the FCC. Unauthorized modification of the frequency, power, or originally designed functions and characteristics of the RFID reader are prohibited.
2. This product has a water-resistant design. Unauthorized removal of the screws and case of the product will damage the water-resistant performance and void product warranty.
3. Cables are water-resistant. Do not damage the shield, as it will also damage water-resistant performance.
4. The reader should be positioned so that personnel in the area for prolonged periods may safely remain at least 20 cm (8 in) in an uncontrolled environment from the reader's surface.
5. Avoid the interference of other radio frequencies with the look-up table frequency-hopping spread spectrum (FHSS).

Overview

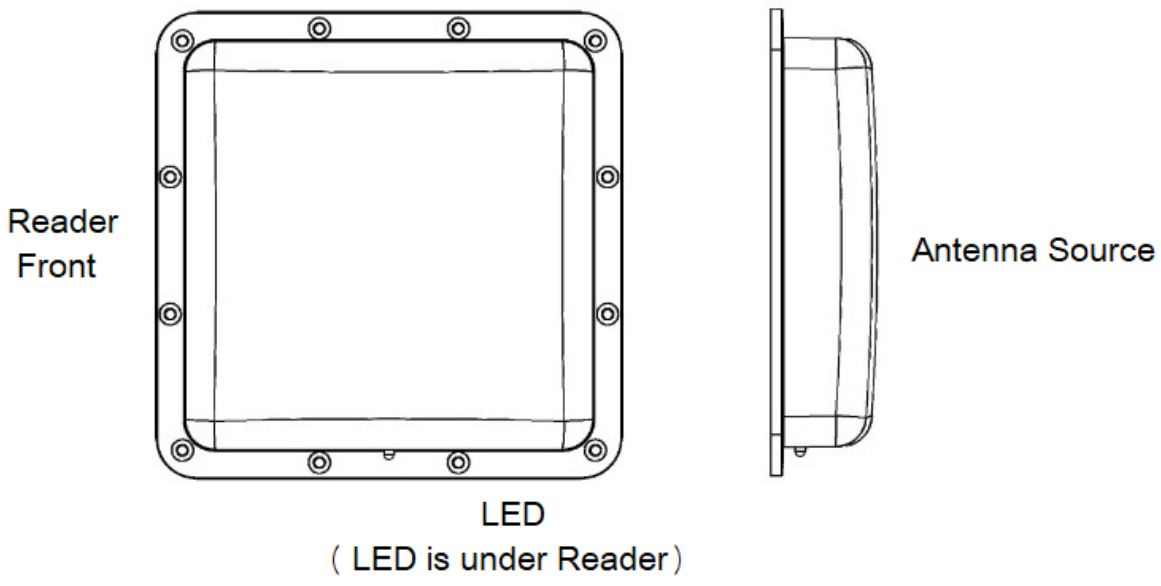

Wire Definitions

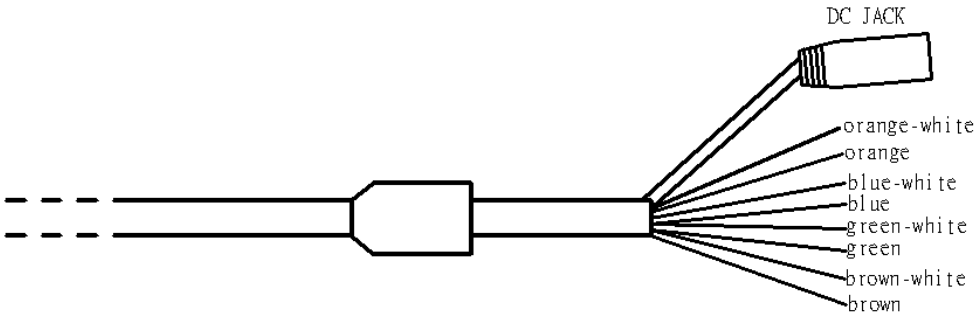

Wire Color	Definition	Function
Orange-White	D485+	Not functional
Orange	D485-	
Blue-White	GND	GND
Blue	GND	GND
Green-White	DATA 1	Wiegand communication interface
Green	DATA 0	
Brown-White	DI	External control signal input, H:3.3V / L:0V
Brown	DO	Not functional

1. Wiegand Communication Interface
   1.1. Connect with access controllers using Wiegand interface (one-way operation).
   1.2. Support by Wiegand 64 interface.
2. DI (external control signal input)
   2.1. Signal level defining: High level (H): 3.3V / Low level (L): 0V (GND signal)
   2.2. When the external control signal input is at high level and GV-RU9003 is in the standby mode, GV-RU9003 will not output any identification code to the back-end access controller.
   2.3. When the external control signal input is at low level and GV-RU9003 is in the working mode, GV-RU9003 will output the identification code on the tag to the back-end access controller.
   2.4. If DI is not in use, connect it with the blue or blue-white wire.

Connecting GV-RU9003

1. Connect GV-RU9003 to a Wiegand signal source based on the communication interface of the access controller.

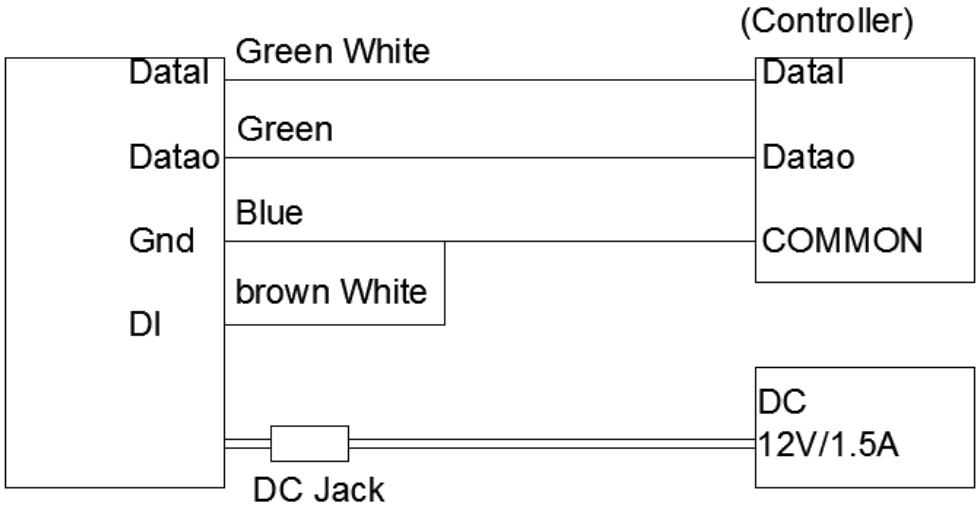

2. DI (brown-white) is the input signal (e.g. ground induction loop or photo interrupter) controlling the operating mode of GV-RU9003 with external control. If external control is not in use, connect it with the blue or blue/white wire.
3. Connect GV-RU9003 to power using one of the methods:
   - Connect the DC Jack to a power adaptor (self-prepared).
   - Connect the DC Jack to the controller using the DC Jack power cable (supplied).



Note: When connecting via Wiegand, the **Ground (GND)** wire must be connected alongside the Wiegand data wires.

Installing GV-RU9003

You can install the reader on a pole or a pillar. Two types of pole mounts are recommended, as indicated below.

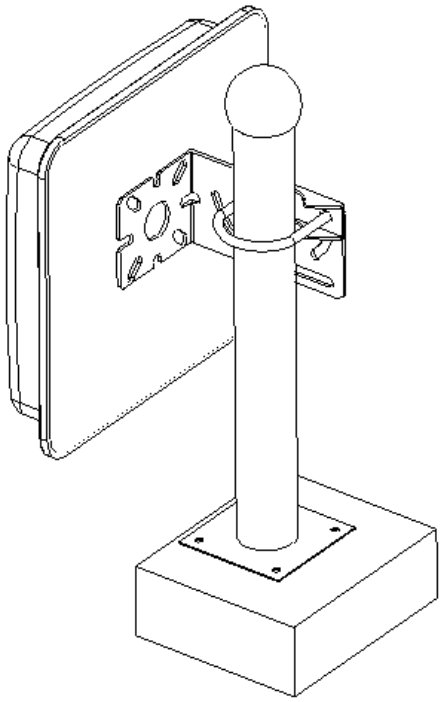

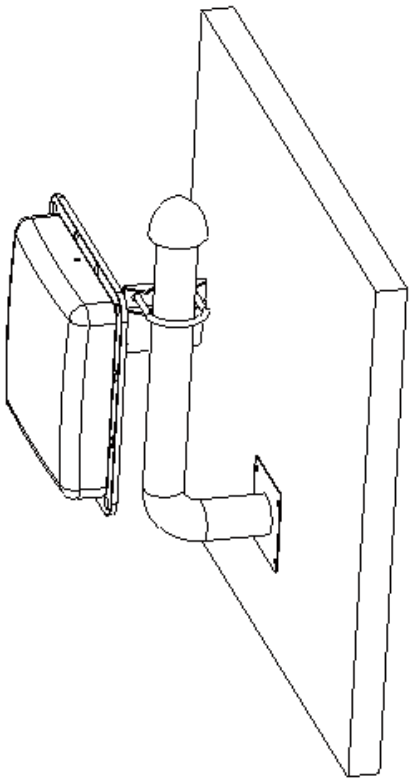

Note: Make sure the diameter of the pole is within 53 mm (0.17 ft).

1. Secure the L-bracket with four screws (supplied) on the rear side of the UHF RFID Reader.

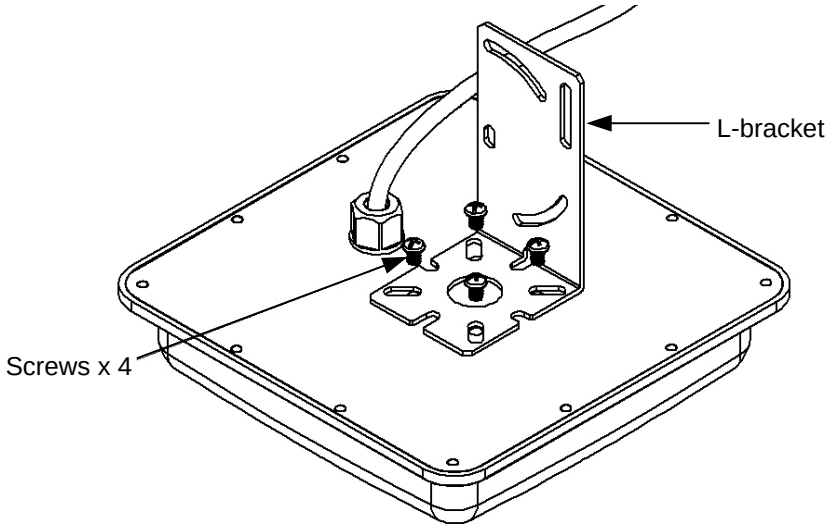

2. Secure the reader on a pillar or a pole using fixed-clamp and U-clip.

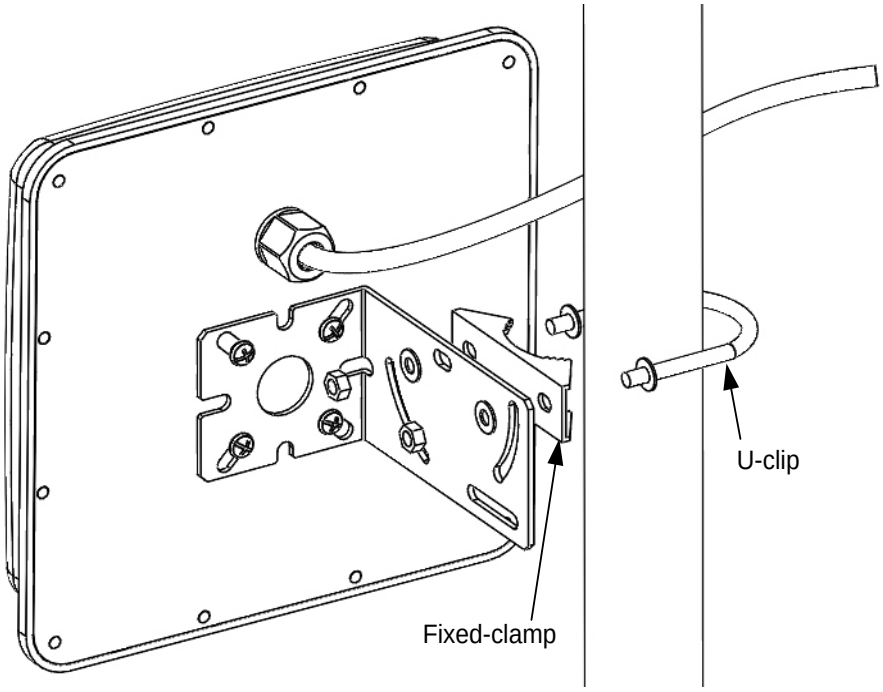

3. Adjust the angle of the U-clip on L-bracket and secure the hexagon screw nuts.

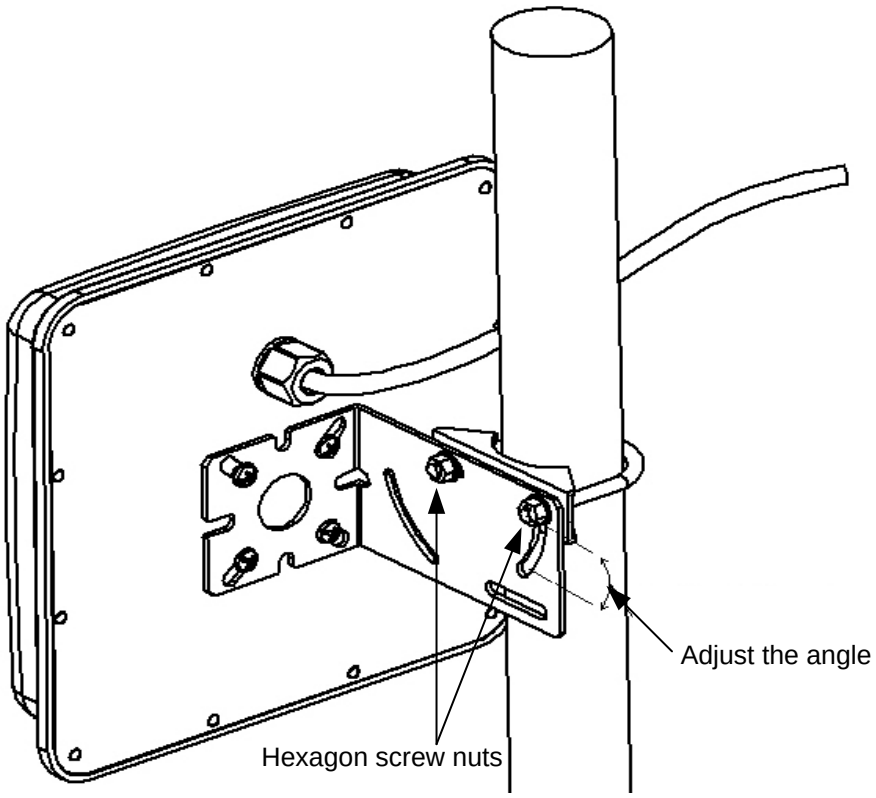

4. Overview of pole mount.

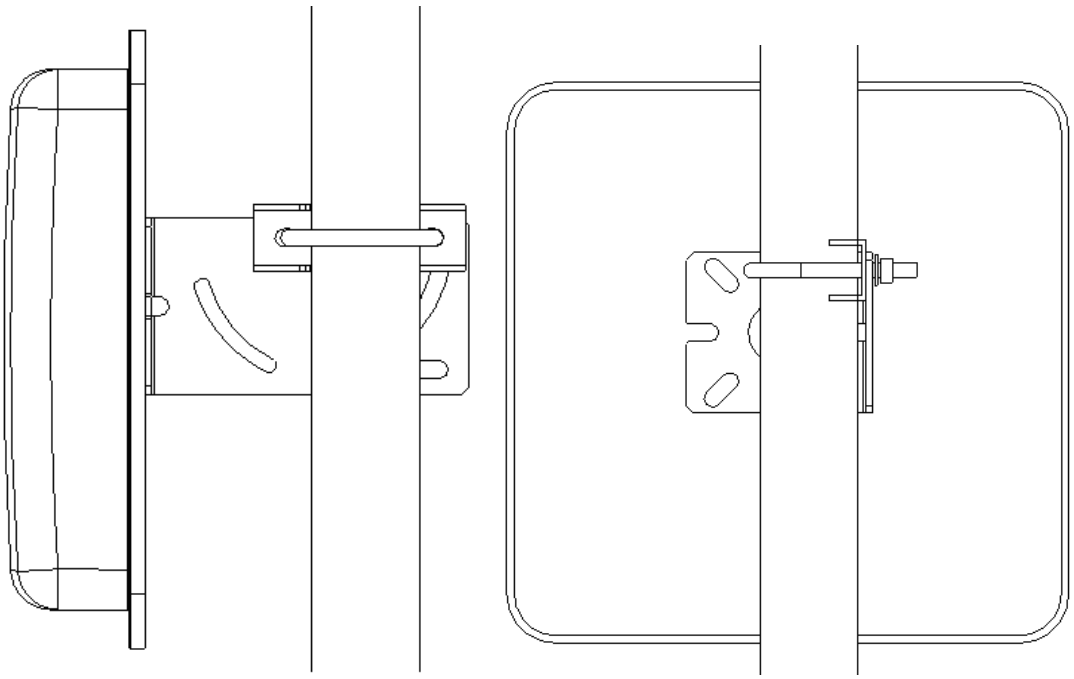

Installation Considerations

The reading range of 10 m (33 ft) is achieved when the RFID Reader and the RFID tag are installed at the same height, directly facing each other. The reading range is heavily dependent on the readability of the RFID tags being recognized. Therefore, the reading range may be affected by a variety of environmental and situational factors, which are exemplified by but no limited to the list below:

- The view angle and height of the RFID Reader installed, relative to:
  - The position of the RFID Tag being recognized
  - The position and curve of angle, if any, of the driving lane
- The stability of the power supply of the RFID Reader
- The quality and conditions of the RFID Tag being recognized
- Whether there is any obstruction, especially metal or other materials such as insulation film on the front windshield, between the RFID Reader and Tag
- Whether there is any electromagnetic interference near the installation site of the RFID Reader
- Whether there is any channel-interference among multiple RFID Readers installed close to each other
  - When facing opposite directions, RFID Readers must be placed 20 cm (7.9 in) apart or more.
  - When facing the same direction, RFID Readers must be assigned to separate bands (available upon request when purchasing).

To further improve the reading range of your RFID installations, follow the steps below.

1. Check the antenna pattern as listed below and make sure that the Tag on the passing vehicles will be on the opposite side of the RFID Reader.

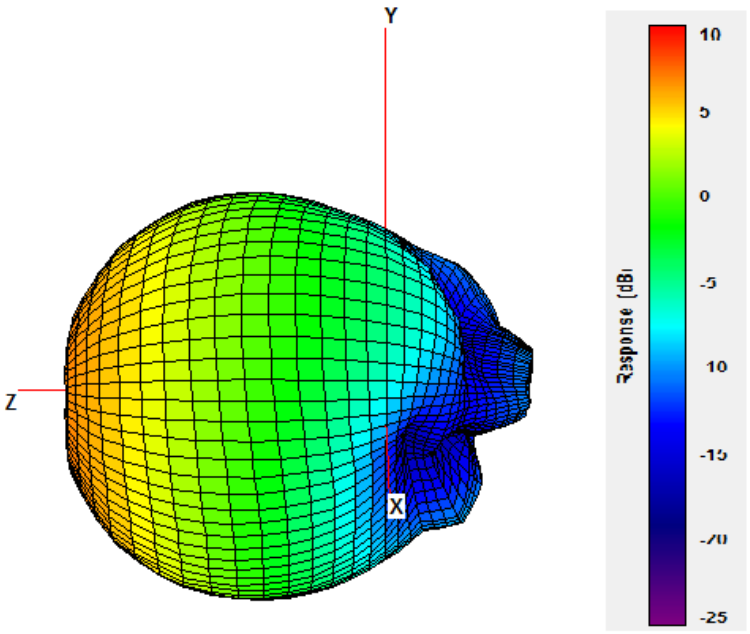

2. Install the RFID Reader with the antenna paralleled to the Tag for better reading results.

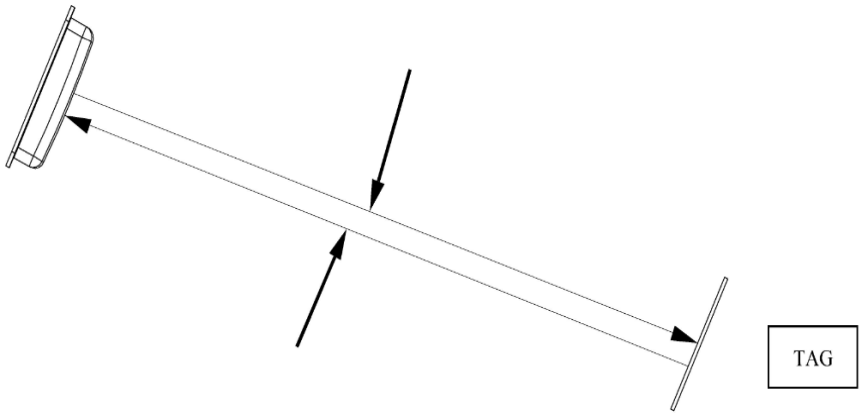

The Tag receives signals and returns them to the RFID Reader.

3. Install the RFID Reader and Tag as shown below.







Correct

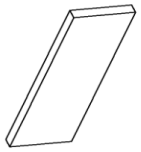

Misplaced

4. RFID Reader Installation Position

4.1 Do not install RFID Reader near metal or the metallic substance which affects the electromagnetic field type.

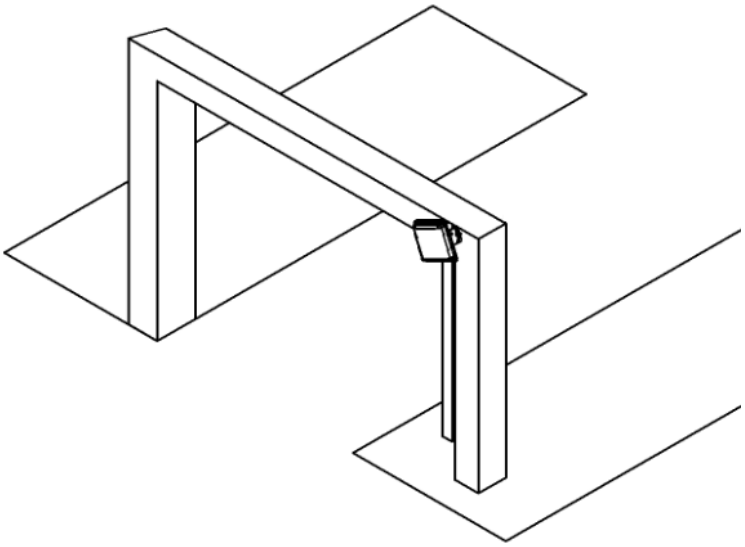

4.2 The recommended maximum height to set the RFID Reader is 1.8 - 2.2 m (5.9 - 7.2 ft). The height of the reader should not be lower than that of the RFID Tag being recognized.

4.3 The recommended angle to set RFID Reader is 15-20 degrees. Adjust the angle according to the actual installation site.

4.4 Keep any barrier away from the reading zone between RFID the Reader and Tag.

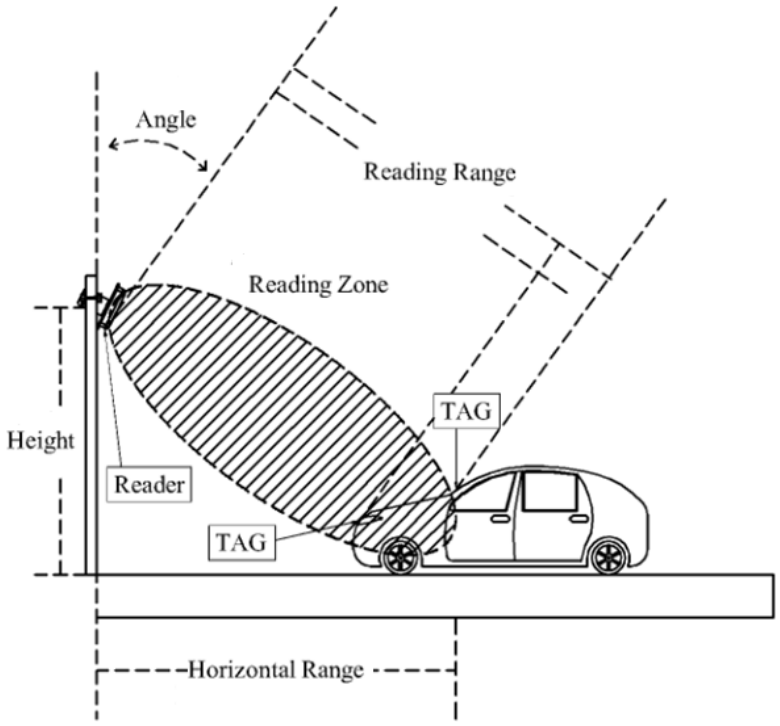

5. The RFID Reader must be installed at the same side of the Tag or at the nearest reading range to the Tag.

5.1 Upper Installation

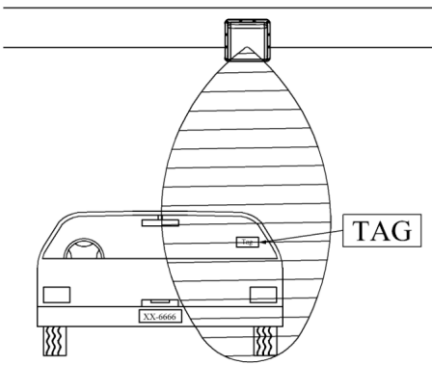

Proper

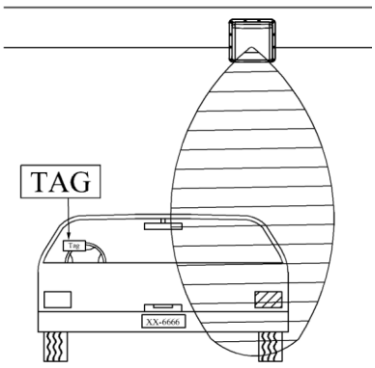

Improper

5.2 Side Installation

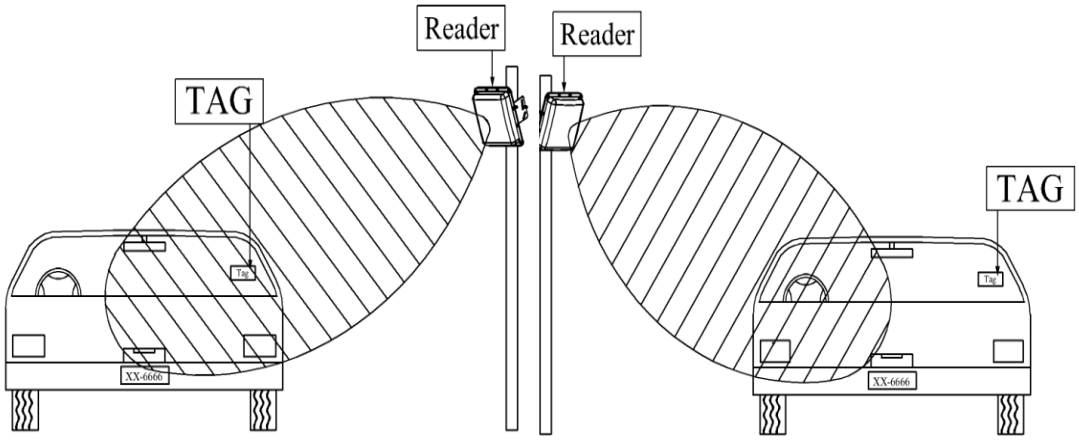

Proper Improper

6. Recommended Tag Position

Vehicles

6.1 Place the Tag on the front windshield or headlight, at the nearest reading range to the reader.

6.2 When placing the Tag on the headlight, keep the Tag away from the metal body of the vehicle.

6.3 If the car windshield glass contains metallic line, it will affect the reading range. To avoid such situation, install the tag on the headlight.

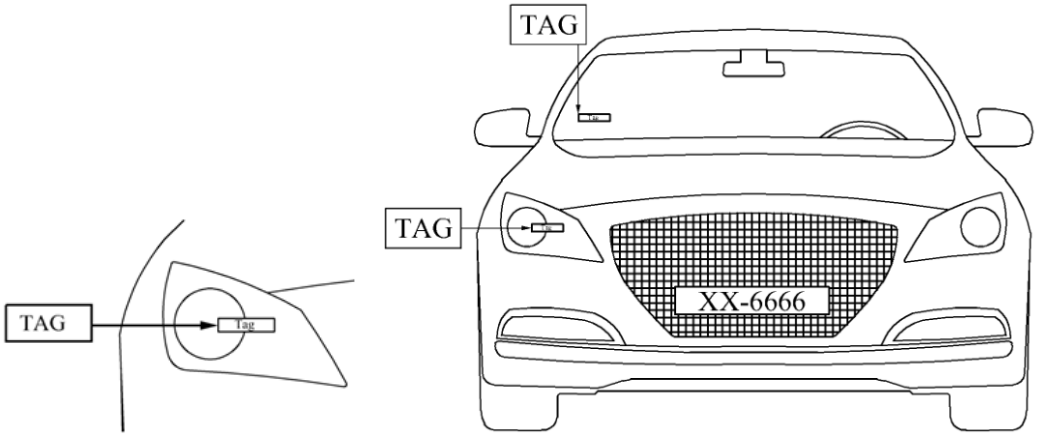

Motorcycles

6.4 Install the Tag on the front shield and at the closest range to the RFID Reader.

6.5 If there is no front shield available, it is suggested to install the Tag on the plastic body of motorcycle at the closest range to the RFID Reader.

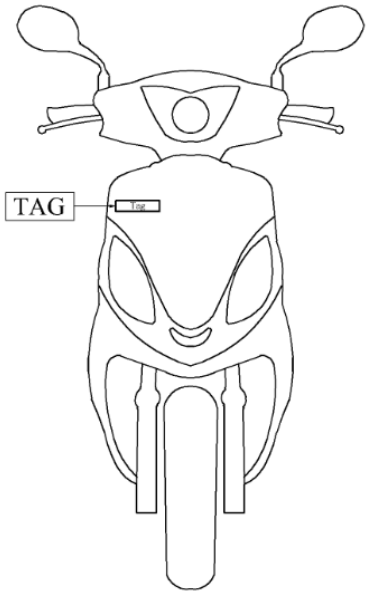

7. For card-type tags, hold the card as shown below to ensure reading results.

Correct

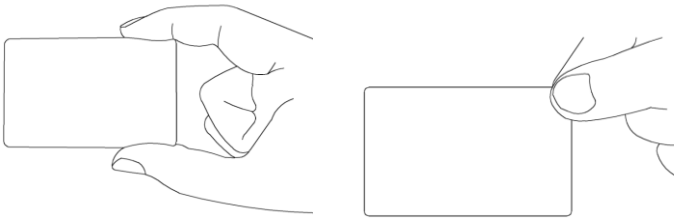

Misplaced

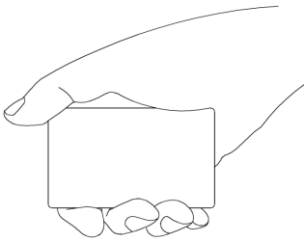

8. Notice

8.1 When the installation is complete, examine and adjust the environment parameters again for better reading results.

8.2 When two or more RFID Readers are installed together, co-channel interference might occur.