DT Series Teleprompter for Broadcasting

User Manual

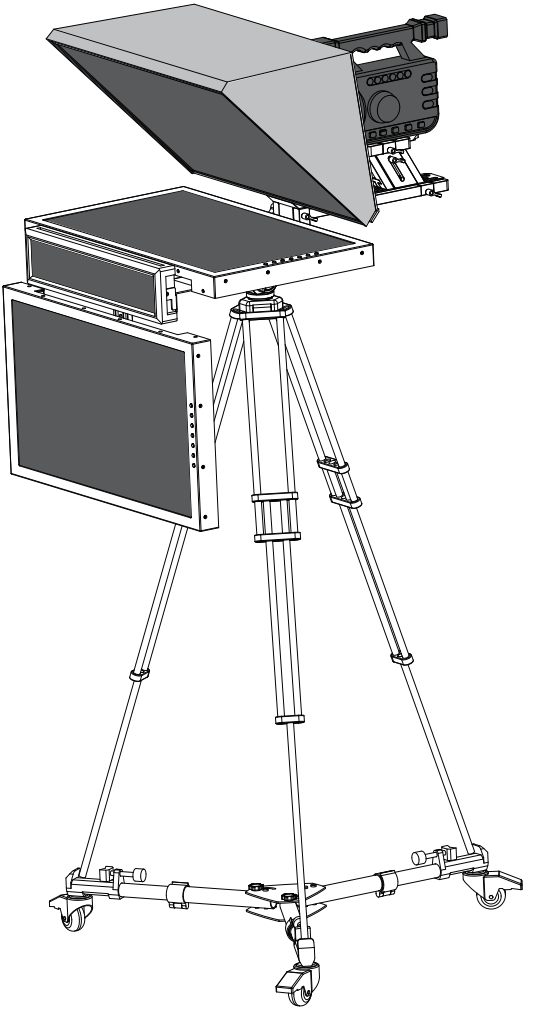

Contents

Introduction 01

Product Description 02

Package List 02

Exploded View 03

Assembling Diagram ..... 04~13

1、Installing tripod/castors 05

2、Installing display plate 06

3、Installing teleprompter 07

4、Installing spectroscope combobox 08

5、Installing lens shade 09

6、Installing teleprompting/self-inspection display 10

7、Installing tripod head & camcorder 11

8、Installing timer 12

9、Teleprompter installation is done 13

Ⅰ.Computer Display Settings 14

II. USB Drive and Dongle 14

III.Installing Software 15

Ⅳ.Software Operation ..... 16~17

Adding a manuscript for broadcasting 16

Commonly used options for text adjustment 17

Display mirror image settings 17

V. Menu Functions ..... 18~25
A.File 18
B.Window 19
C. Font style 19
D1.Font selection 20
D2.Font style 20
D3.Font size 20
E.Color settings 20
F.Font bolding/italicizing 21
G.Alignment of paragraphs 22
H.Line spacing 22
I.Software languages 23
J.Centerline 23
K.Countdown 24
L.List of files 24
M.Play 24
N.Play speed 24
O.Labelling 25
P.Edit 25
VI.Shortcut Keys 25
VII. Remote Controller ..... 26~27
Windows system Bluetooth connection steps 26
Mac system Bluetooth connection steps 27
Aftersales Services 28

Introduction

Thank you for choosing our products!
Before using the product for the first time, please read the manual and other materials carefully. You are advised to perform the operation, installation, and maintenance as specified herein.

The manual has been carefully checked and proofread, but we cannot guarantee that it has no error or omission in text description.

The pictures herein are for reference only. In case any picture is inconsistent with the actual product, please be subject to the product. We reserve the right to improve or modify the manual and product. Any product adjustment will be made without further notice.

Please keep the manual and warranty card properly. Within the maximum range allowed by laws, the company is not responsible for any direct, indirect, intentional, unintentional damages or losses resulting from the installation or improper usage of the product.

The manual is protected by legal copyrights. Without written permission, any duplication or spread of the manual in any form shall be prohibited.

Product Description

The DT Series Teleprompter for Broadcasting is applicable to scenarios including TV station studios, interview rooms, and advertisement filming. Before use, you need to install the teleprompter to a tripod for fixing. Besides, you need to install and turn on a camcorder, a teleprompting screen, and a spectroscope and open the prompter software to help the user see the manuscript on the spectroscope.

Package List

S/N	Name	Qty	Unit
01	HD coated Spectroscope Combobox	1	Set
02	Lens Shade	1	Piece
03	Teleprompter	1	Set
04	Display Plate Support	1	Set
05	Teleprompting Display	1	Set
06	Self-inspection Display (Optional)	1	Set
07	Timer (Optional)	1	Set
08	HDMI Cable	1	Piece
09	VGA Cable Optional	1	Piece
10	USB Extension Cable	1	Piece
11	Dongle	1	Piece
12	Bluetooth Adapter	1	Piece
13	Remote Controller	1	Piece
14	Foot Switch	1	Piece
15	Aluminum Box	1	Piece

Exploded View

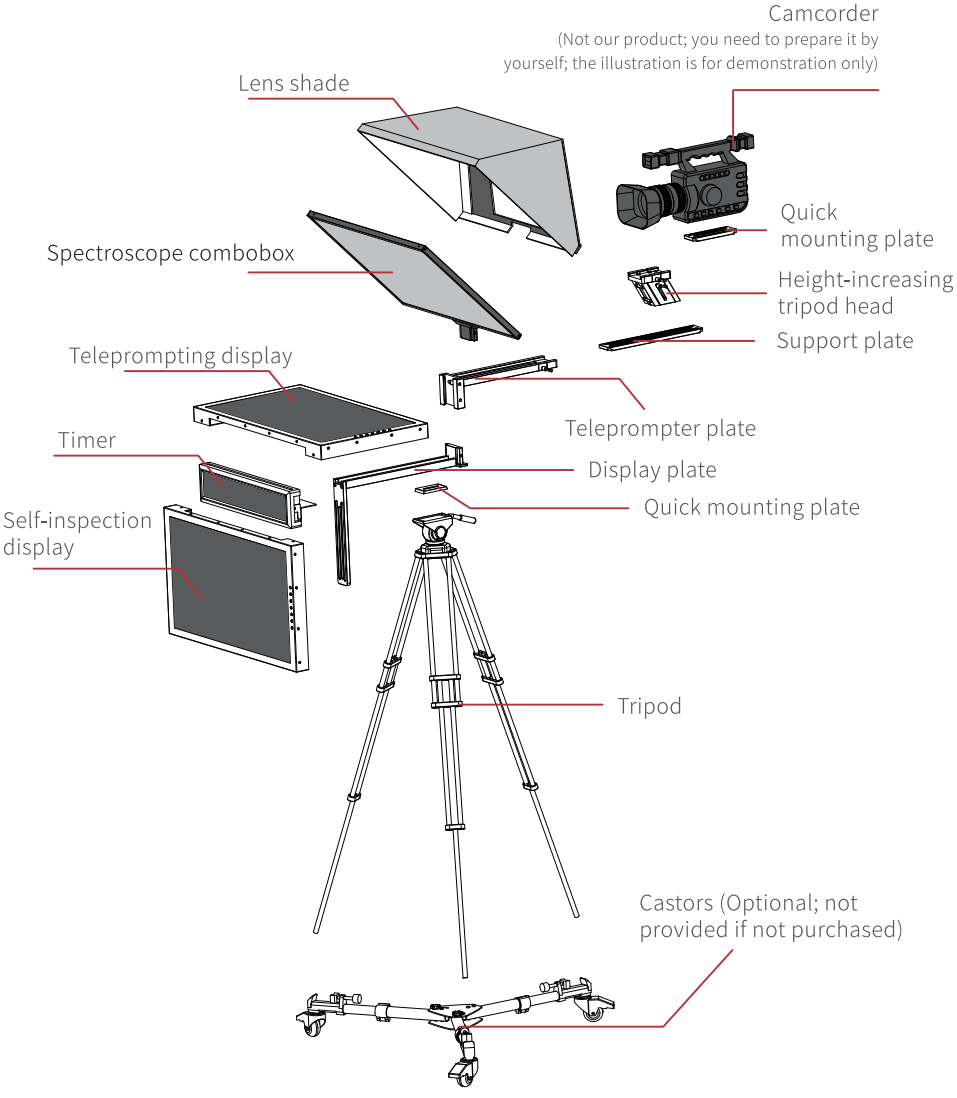

Assembling Diagram

The diagram below is the overall assembling diagram.
See the text below for detailed steps.

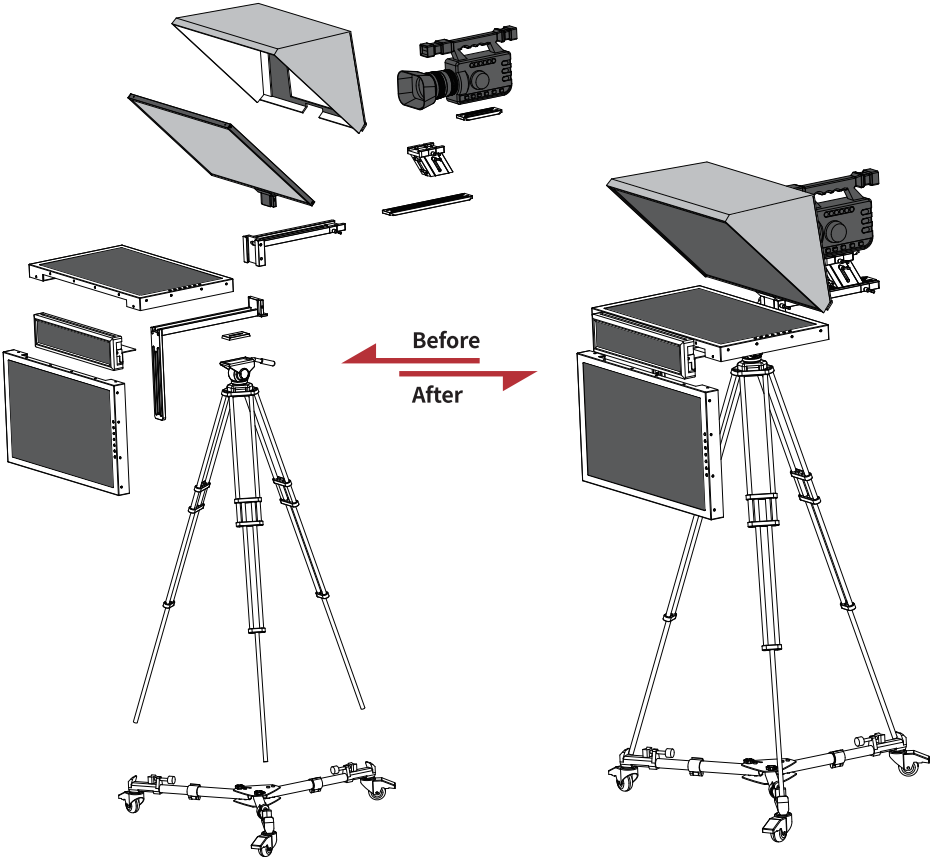

1. Installing tripod/castors

Take out and unfold the tripod and castors; install the tripod to the castors and tighten it with screws. If the castors are not purchased, you can directly unfold and install the tripod, place it on a smooth ground, and tighten it with screws.

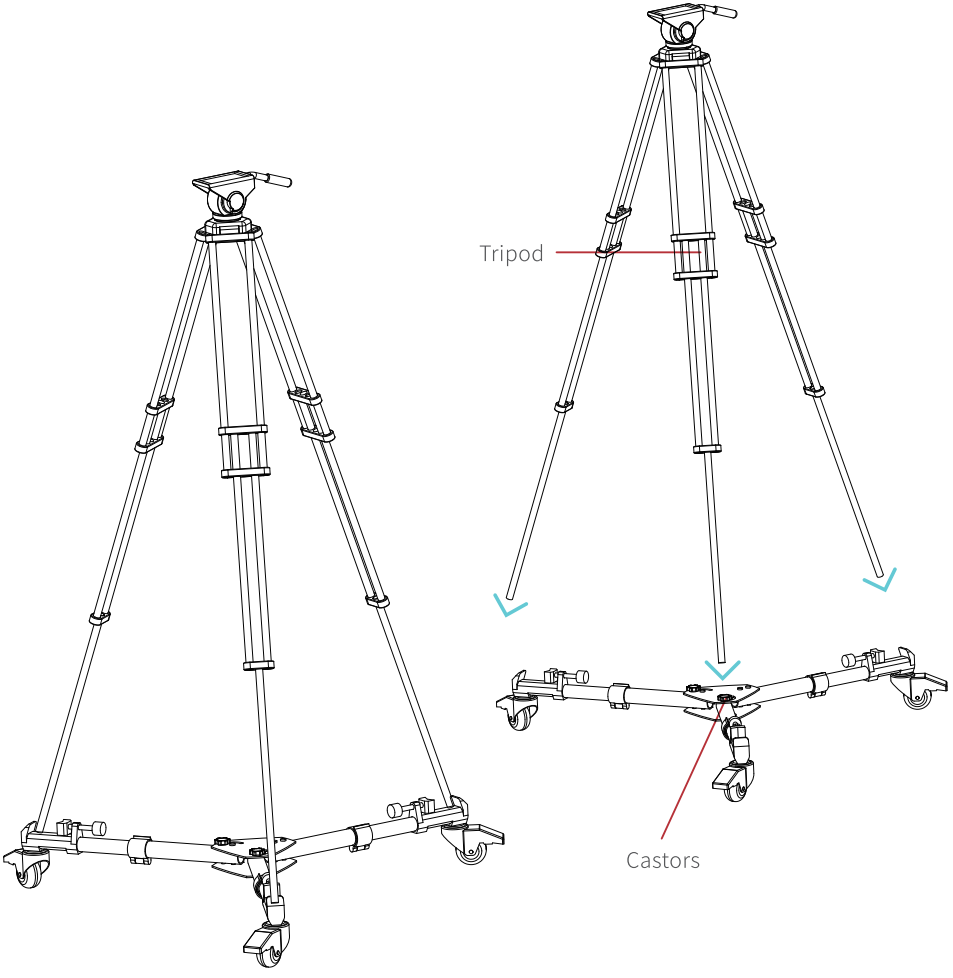

2.Installing display plate

Use the screws on the tripod quick mounting plate to fix the tripod and the teleprompting display plate.

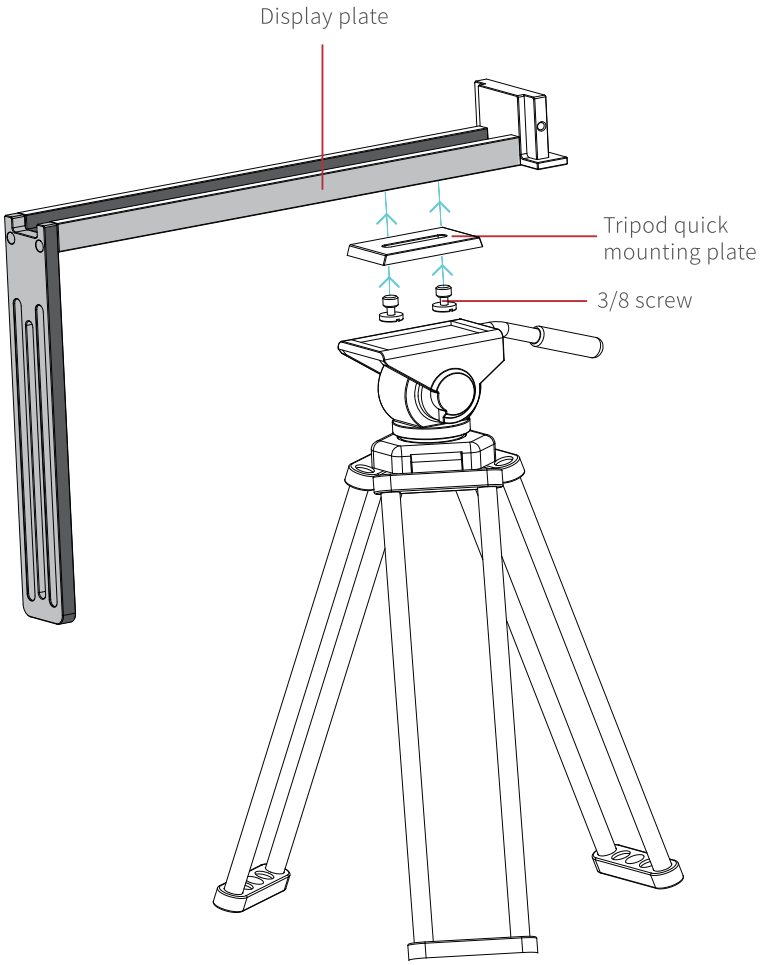

3. Installing teleprompter

Insert the slide block plate into the slot and fix it with thumb screws.

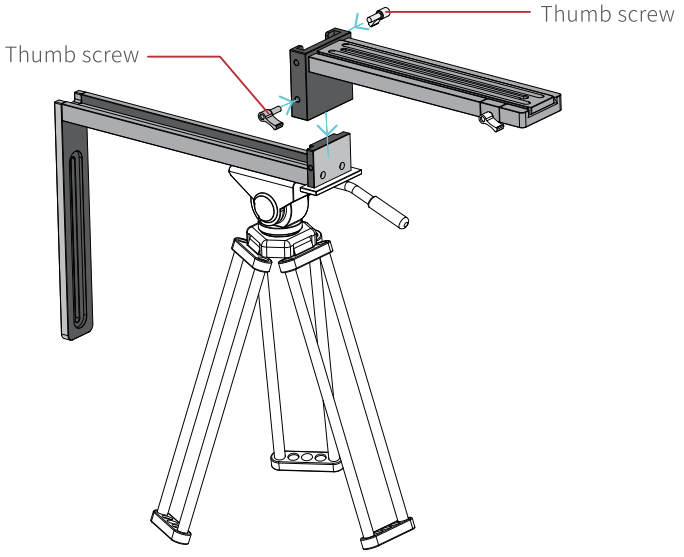

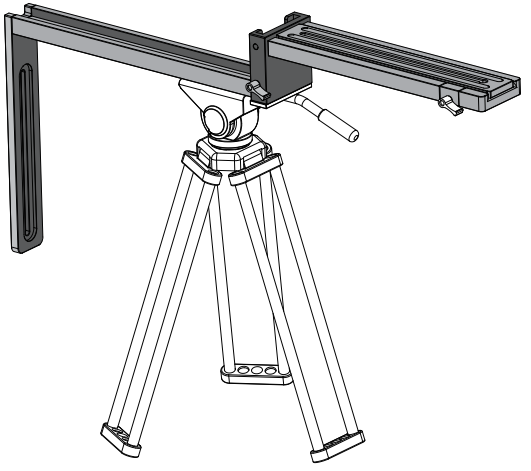

4. Installing spectroscope combobox

Insert the spectroscope combobox into the plate slot and fix it with thumb screws.

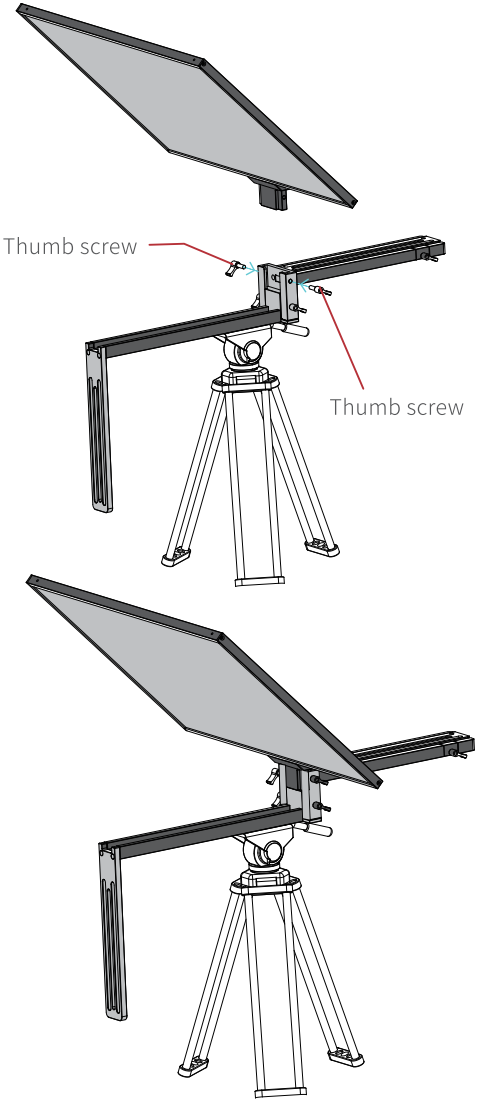

5. Installing lens shade

Open the lens shade and zip it up; install the lens shade to the spectroscope combobox.
Note: Both the combobox and the lens shade are equipped with hook & loop fasteners. When installing the lens shade, press the hook & loop fasteners to make them fully secure.

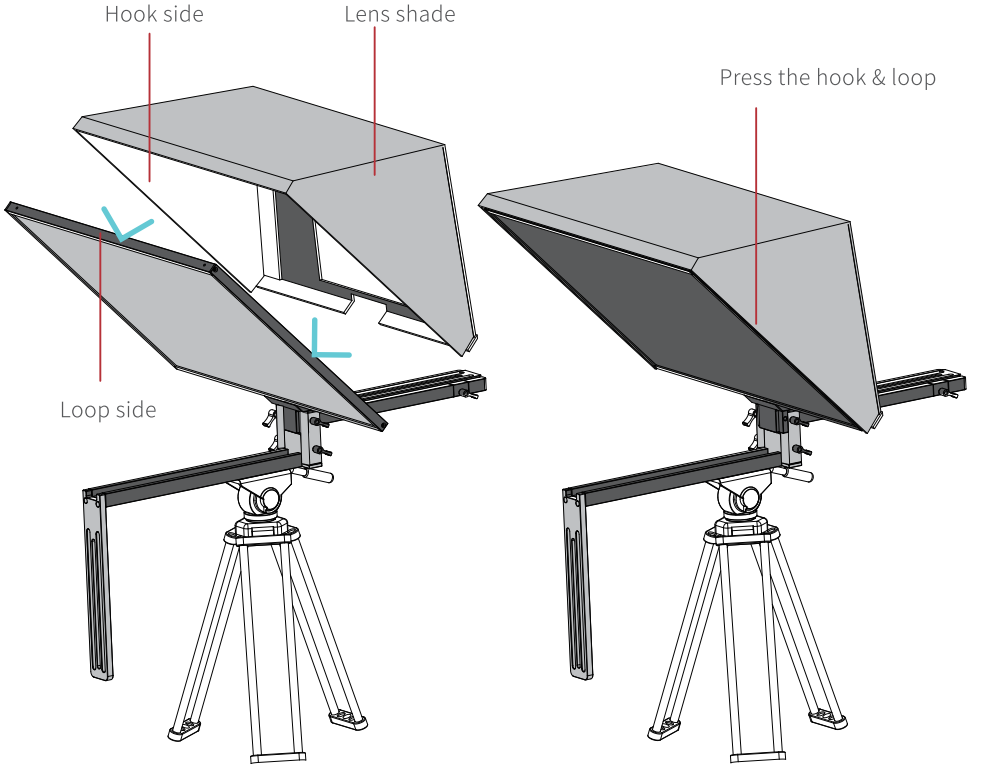

6. Installing teleprompting/self-inspection display

First of all, fix the display plate to the display by using four M4 screws; do the same for any display with two screens.

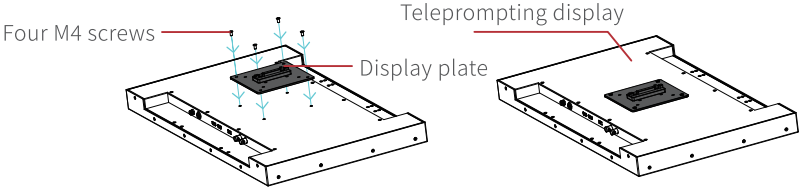

At the bottom, fix the teleprompting display to the plate by using thumb screws.

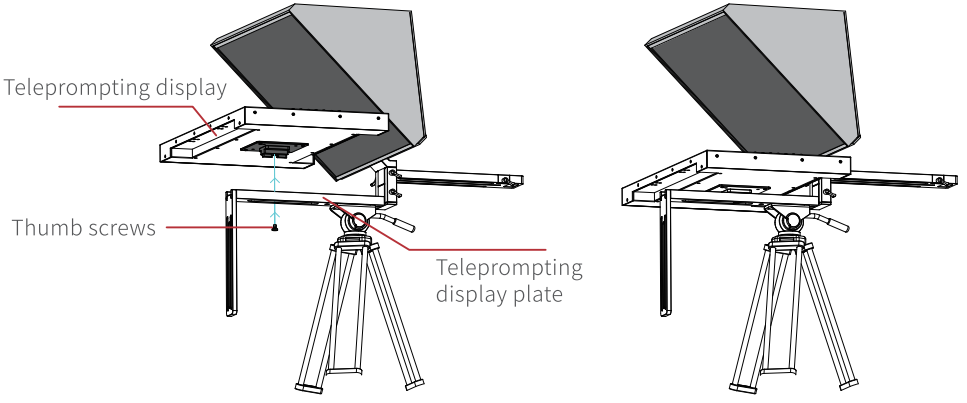

Likewise, fix the self-inspection display to the plate by using thumb screws.

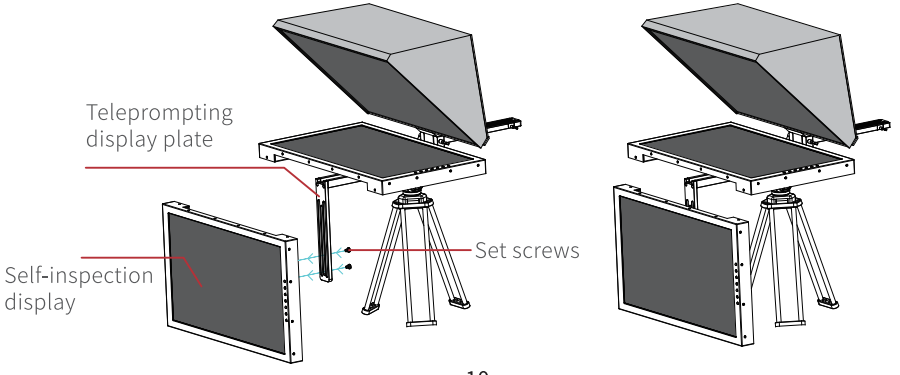

7.Installing tripod head & camcorder

Take out the slide block in the tripod head; install the height-increasing tripod head; reinstall the tripod head to the plate after the tripod head height is adjusted by tightening the screws.

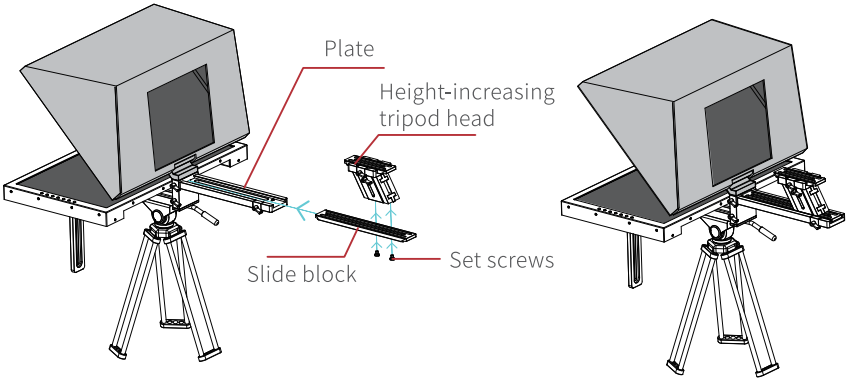

Fix the quick mounting plate at the bottom of the camcorder, and install the camcorder to the top of the height-increasing tripodhead.

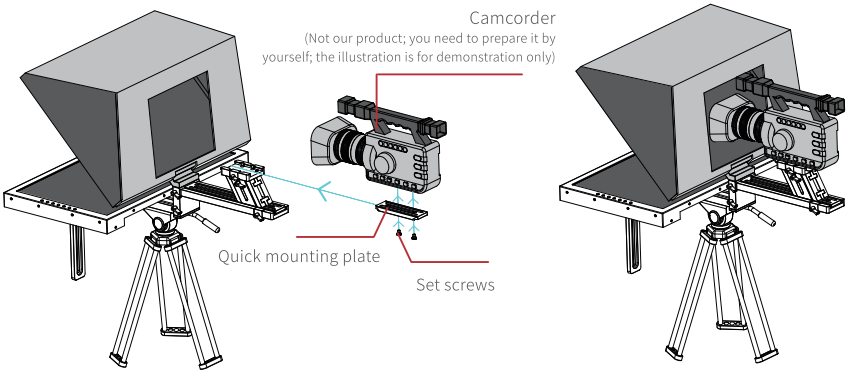

8.Installing timer

Insert the timer into the plate slot and fix it by using thumb screws.

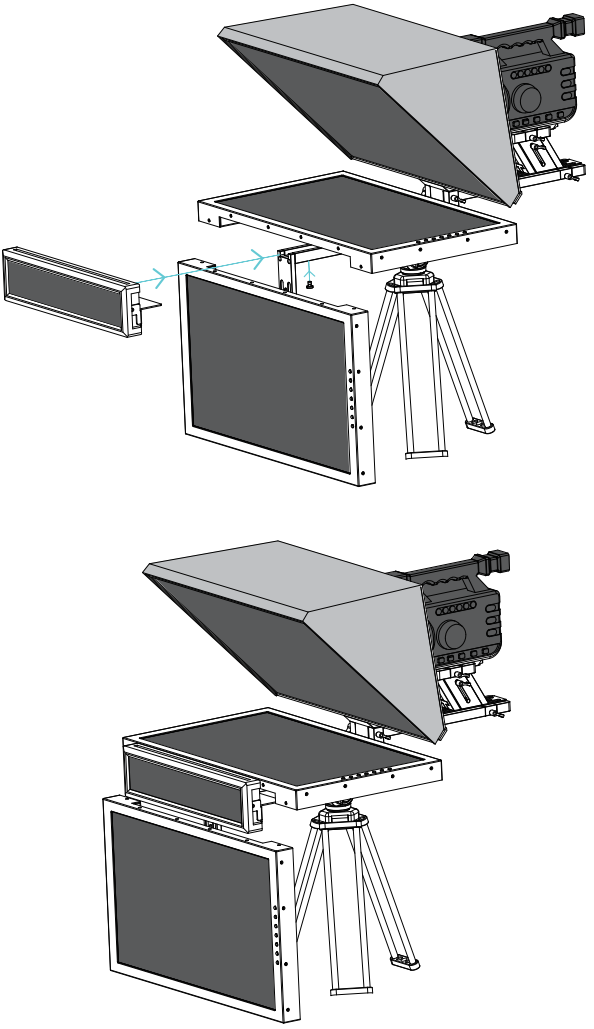

9.Teleprompter installation is done

Adjust the camcorder’ s focal length and the height-increasing tripod head to make the camcorder have a suitable location for filming.

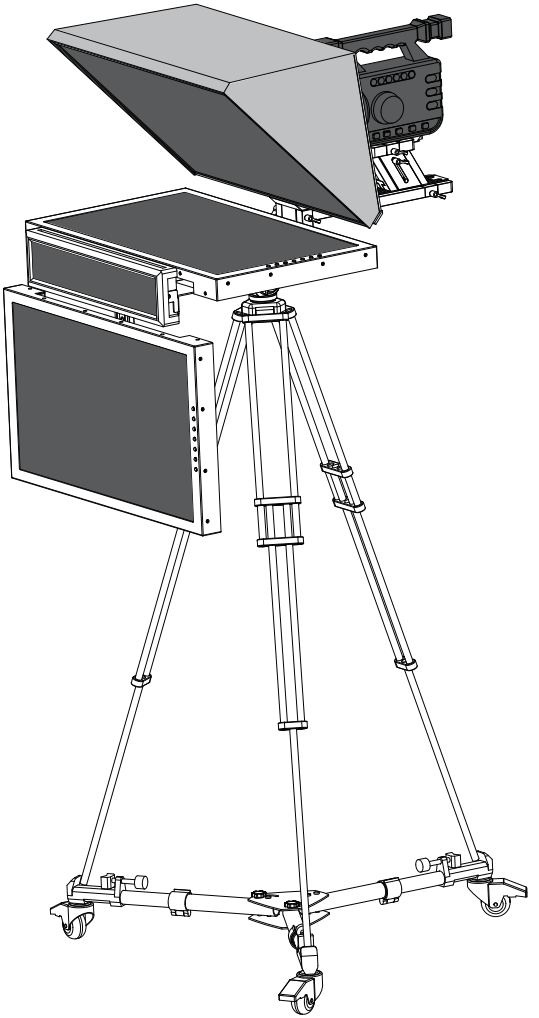

I. Computer Display Settings

Before using the teleprompter software, make sure your computer is connected to the teleprompter and has normal display. Besides, choose the mode “duplicate these displays” for the multi-display settings.

Windows10 settings: Make a right click on your computer desktop →Display settings→Multi-display settings →Duplicate these display applications (Confirm)

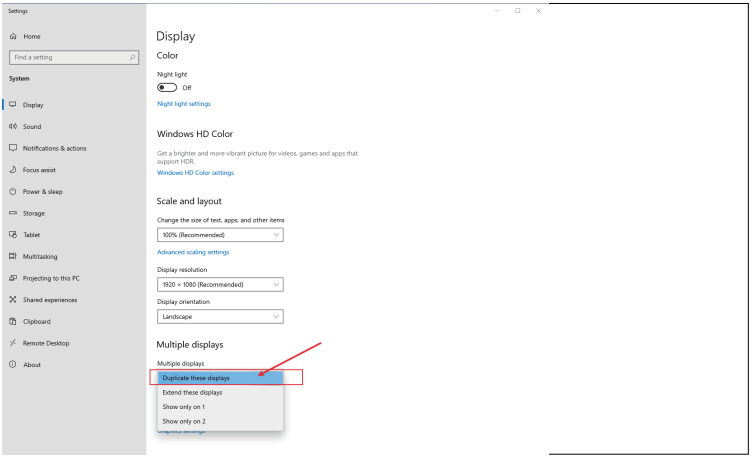

II. USB Drive and Dongle

Note: The software must be used with dongle and USB drive.



Dongle



USB drive

III. Installing Software

Find the installation package “Desview.exe” in the USB drive.



1.Double click “Desview.exe”

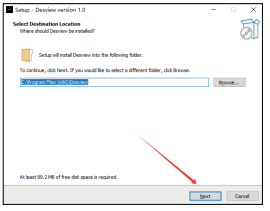

2. Click “Next”

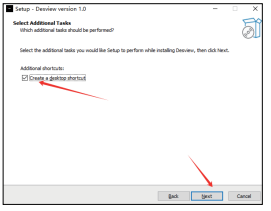

3. Click “Next”

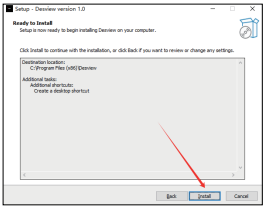

4 .Click “Install”

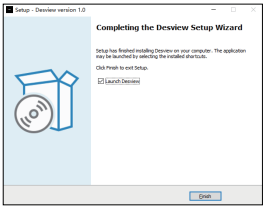

5.Setup is finished



6. Insert the dongle for inspection

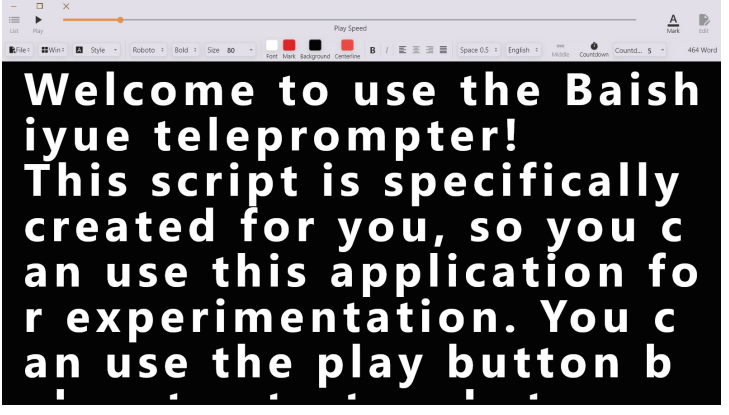

Teleprompter software interface

the shortcut key “Space bar” is used to start/stop the manuscript.

IV. Software Operation

Adding a manuscript for broadcasting

The format of the manuscript can be Word or TXT.
Manuscript amendment and save is supported.

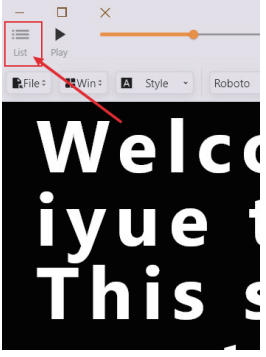

1.Open the “List” in the upper left

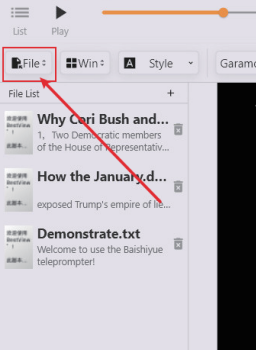

2.Choose “File”

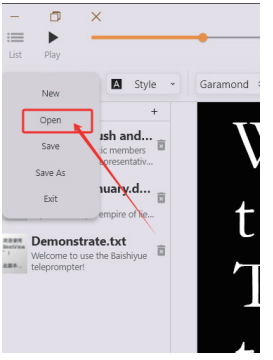

3.Open a manuscript of Word or TXT

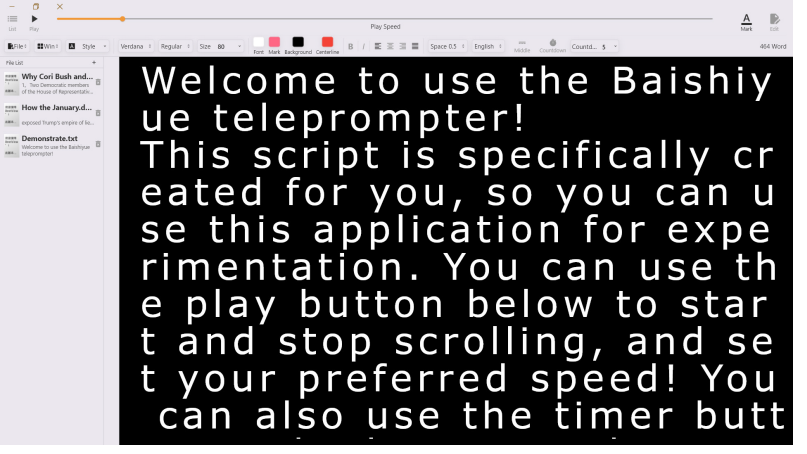

Interface of a successful manuscript operation

Commonly used options for text adjustment

For diverse scenarios, you may adjust the display options for the most appropriate reading experience.

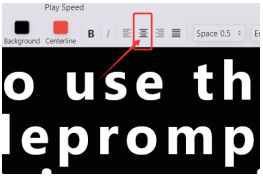

Center



Row height settings

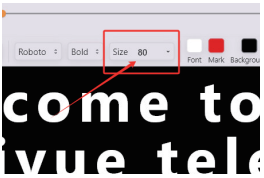

Font size

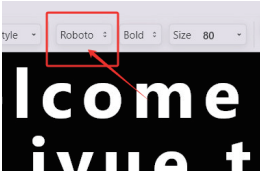

Font selection

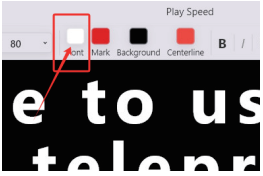

Font color settings

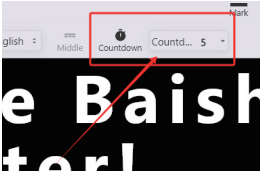

Manuscript countdown setting

Display mirror image settings

Note: Depending on the modes “Duplicate these displays” and “Expand these displays”, the mirror flipping is different. The mode “Duplicate these displays” is recommended.



1.1. Duplicate these displays:

After opening the software, the teleprompter makes a one-touch mirror image flip.

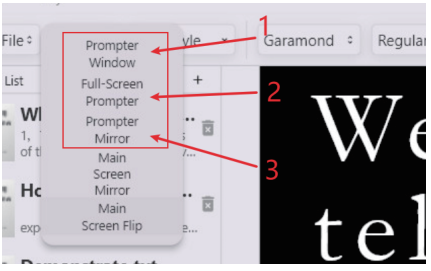

2.Expand these displays:

Click the “Window” menu, select the teleprompter window>teleprompter full screen>teleprompter mirror (or using the display key for mirror image)

V. Menu Functions

You may distinguish these function points according to the letters.

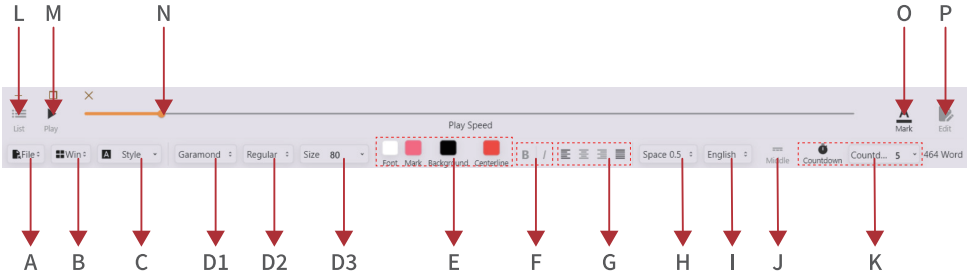

A. File

You may create a new file and open a local file of Word, TXT format

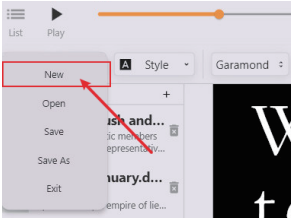



New: You may edit the file as you wish

Editing interface

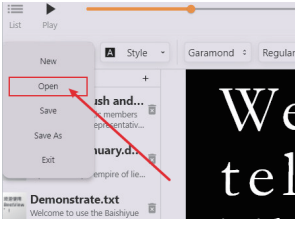

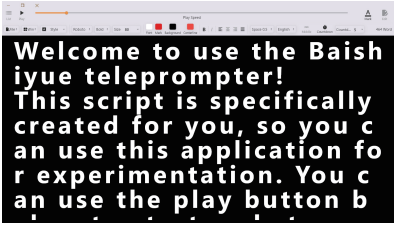

Open: Select a file of Word, TXT format

Page display

B. Window

You may adjust the manuscript display through the “Window” menu.

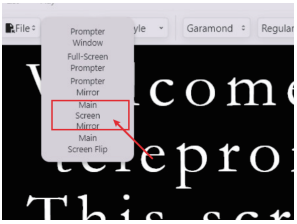

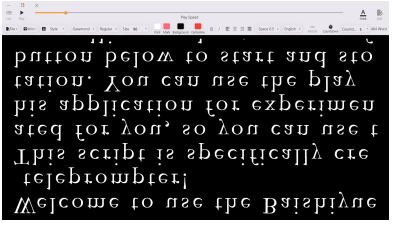

Main screen mirror image

Mirror image display

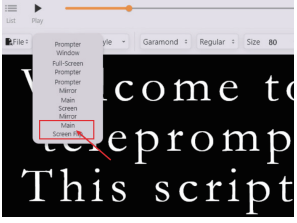

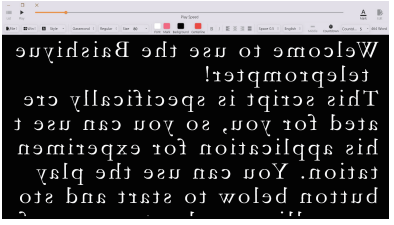

Main screen mirror image

Mirror image display

C. Font style

Three styles: Default, bold, and italic

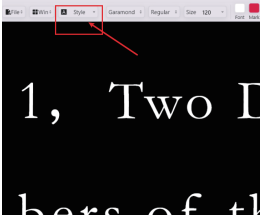

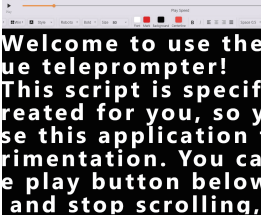

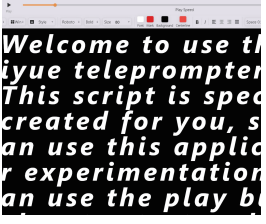

Default **Bold** **Italic**

D1. Font selection

Multiple fonts can be selected.

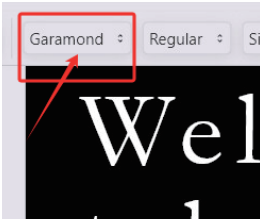

Font selection

D2. Font style

Bold or slender styles are adjustable

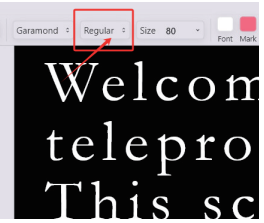

Adjust bold or slender styles

D3. Font size

Font size can be customized

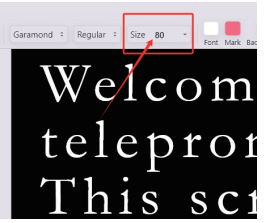

Select font size

E. Color settings

The colors of the manuscript, background, and centerline can be customized.



Font color

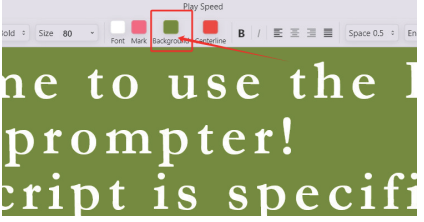

Background color



Label color: 1. Select the words to be labelled;
2. Select a color; 3. Click the label to confirm the change;
click the label again to undo the operation.

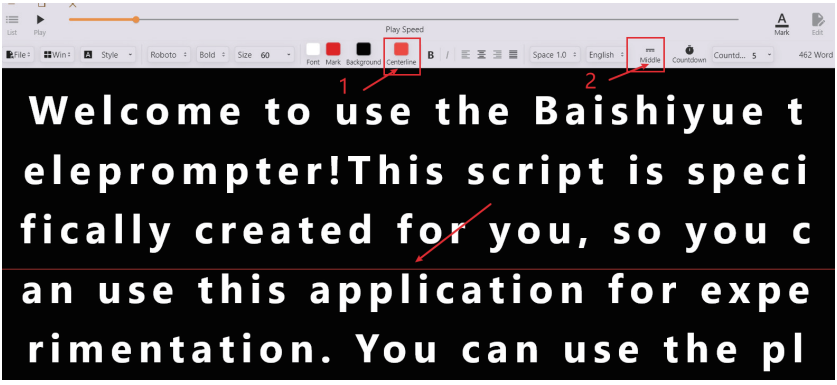

Centerline color: 1. Click the centerline to open the function
2. Select a proposed color to change the color and click it again to undo the operation

F. Font bolding/italicizing

The words can be bold and italicized rapidly.

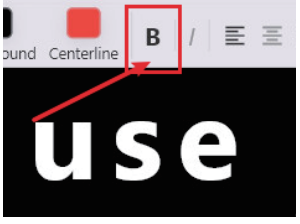

Font bolding

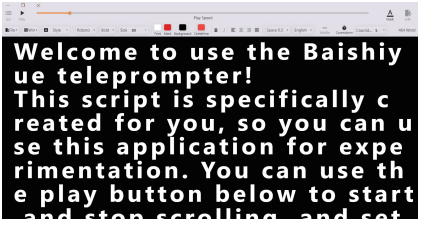

Display of bold words

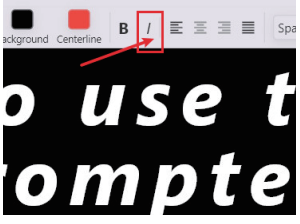

Font italicizing

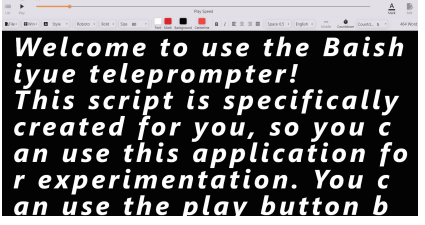

Display of italic words

G. Alignment of paragraphs

You may adjust the words as per your reading habits.

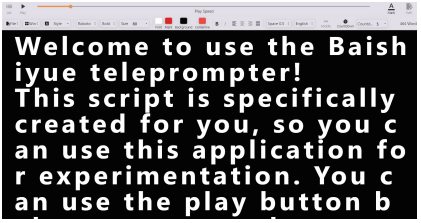

Align left

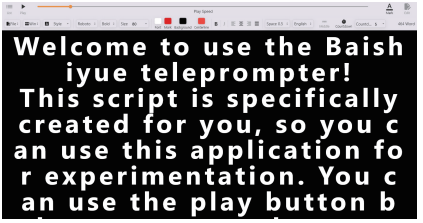

Center

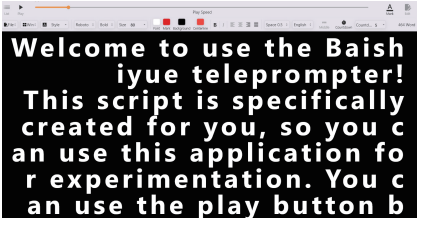

Align right

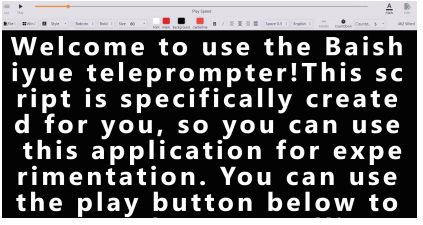

Overspread

H. Line spacing

The line spacing for the manuscripts is based on the font size.

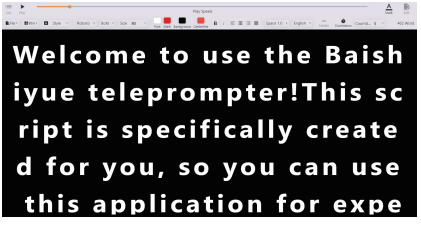

Font size: 80 Spacing: 1.0



Font size: 140 Spacing: 1.5

Note: For the same spacing, the larger the font size is, the fewer words displayed will be. The font size and line spacing can be adjusted as per the broadcaster' s eyesight.

I. Software languages

The software supports nine languages, namely Chinese, English, Spanish, Italian, French, Korean, Japanese, Russian, and German.

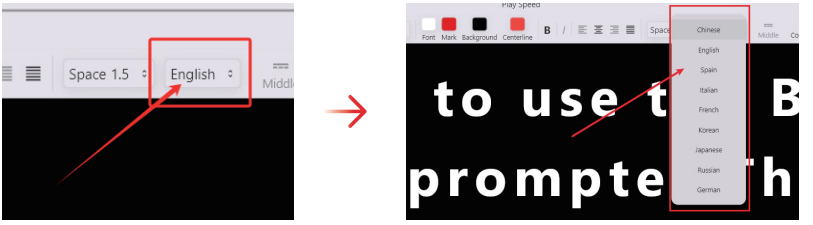

Language selection Nine languages available

J. Centerline

The centerline is used to distinguish the upper and lower parts to facilitate your reading.

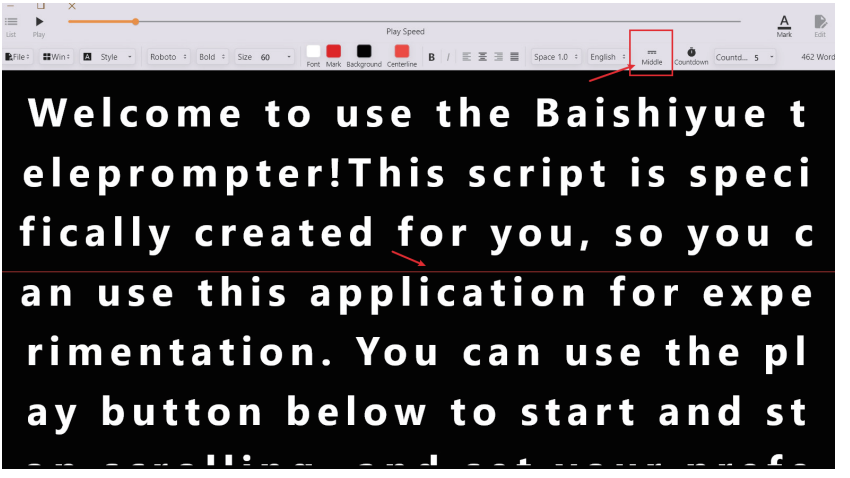

Interface display

K. Countdown

Countdown is set for manuscripts; the maximum countdown is 60 seconds.

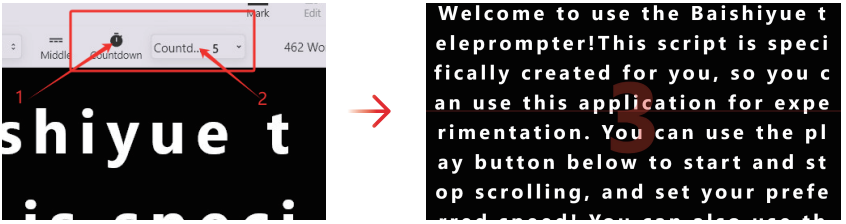

Countdown: ：1. Light up “Countdown” Countdown display
2. Select a time

L. List of files

You may open the list to view the files; and you may edit and save any file.

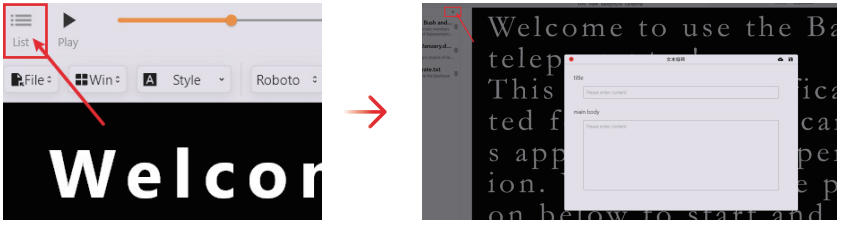

List Page display

M. Play

The shortcut key “space bar” is used to start/stop manuscripts.

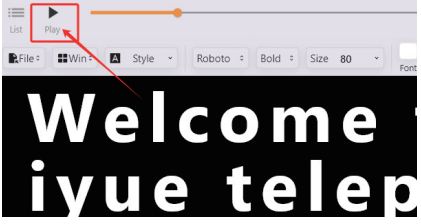

Play key

N. Play speed

The playing speed is adjustable.

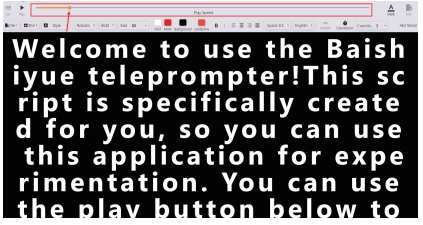

Play speed settings

O. Labelling

The manuscript can be labelled with one or more colors to highlight key contents.

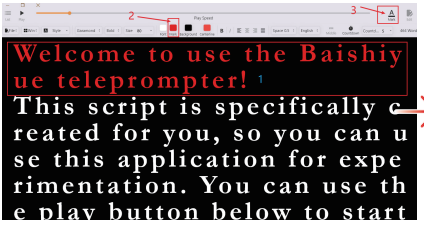

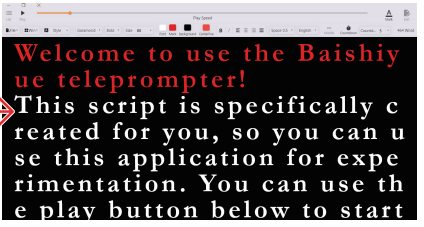

Label:

1. Select the words to be labelled.
2. Click the label color.
3. Light up the label icon – done.

Label display

P. Edit

In the edit mode, you can modify and save the manuscript contents, row height, color, and font size.

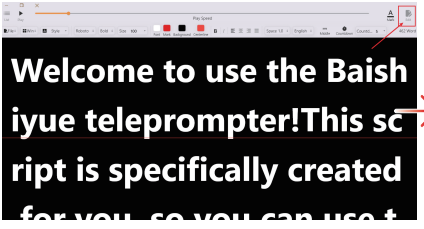

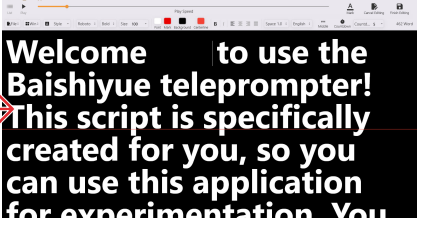

Edit icon at upper right

Edit interface

VI. Shortcut Keys

You can use keyboard shortcut keys for easy operation.

▲ Previous line	▼ Next line	Space bar Play/pause
◀ Play speed “-”	▶ Play speed “+”	Mouse wheel for lines adjustment

VII. Remote Controller

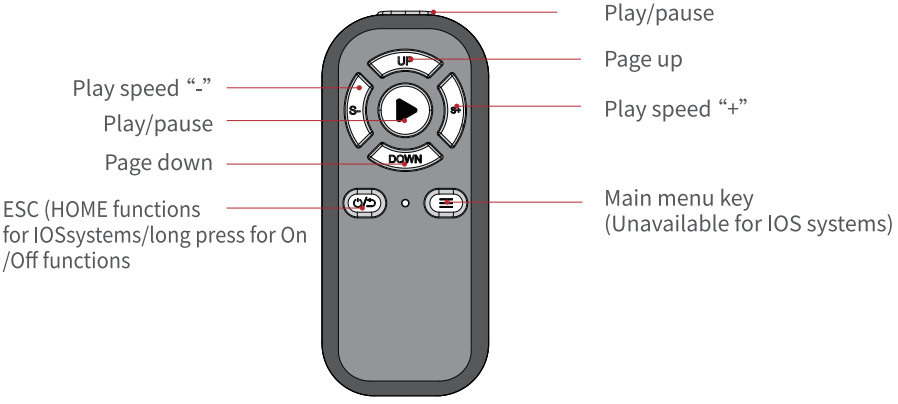

Note: Because of its compatibility, the remote controller functions vary for some phones or tablet computers.

Windows system Bluetooth connection steps

Take Win10 as an example, the remote controller can be easily connected with several steps.

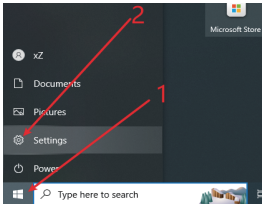

1.Open computer settings

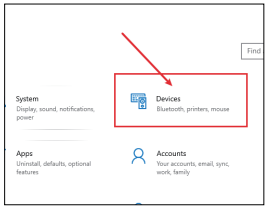

2.Select a device

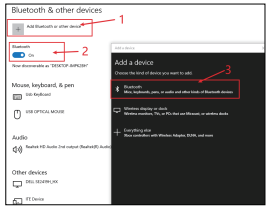

3.Add and open Bluetooth

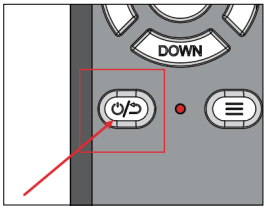

4.Turn on the remote controller

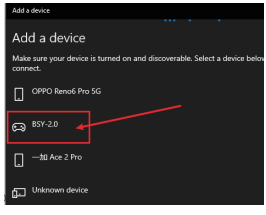

5.Add the “Desview” device

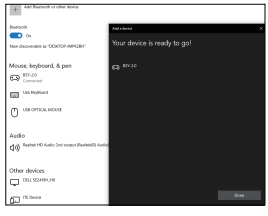

6.The connection is done

Mac system Bluetooth connection steps

The remote controller can be easily connected with several steps.

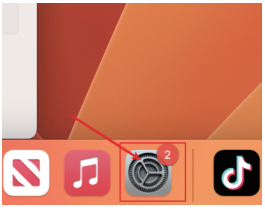

1. Open computer settings

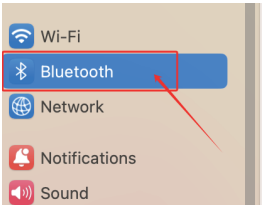

2.Select Bluetooth

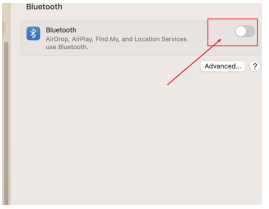

3. Enable Bluetooth functions

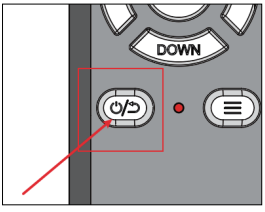

4.Turn on the remote controller

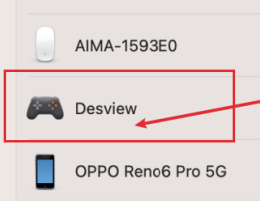

5.Add the “Desview” device

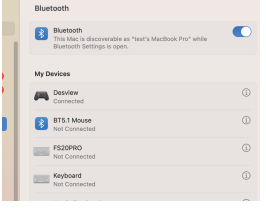

6.The connection is done

Warranty Card

Model: _____

Date of purchase: _____

Barcode: _____

Phone number of distributor: _____

Address of distributor: _____

Failure description: _____

1st repair record: _____

Repair date: _____

Failure: _____

Cause: _____

Completion time: _____

Repaired by: _____

Quality controller: _____

2nd repair record: _____

Repair date: _____

Failure: _____

Cause: _____

Completion time: _____

Repaired by: _____

Quality controller: _____

* The page is the fundamental document for warranty services. Please read it carefully and keep it properly.