

HYDRO HYBRID

User Manual

©2024 ADJ Products, LLC all rights reserved. Information, specifications, diagrams, images, and instructions herein are subject to change without notice. ADJ Products, LLC logo and identifying product names and numbers herein are trademarks of ADJ Products, LLC. Copyright protection claimed includes all forms and matters of copyrightable materials and information now allowed by statutory or judicial law or hereinafter granted. Product names used in this document may be trademarks or registered trademarks of their respective companies and are hereby acknowledged. All non-ADJ Products, LLC brands and product names are trademarks or registered trademarks of their respective companies.

ADJ Products, LLC and all affiliated companies hereby disclaim any and all liabilities for property, equipment, building, and electrical damages, injuries to any persons, and direct or indirect economic loss associated with the use or reliance of any information contained within this document, and/or as a result of the improper, unsafe, insufficient and negligent assembly, installation, rigging, and operation of this product.

Europe Energy Saving Notice
Energy Saving Matters (EuP 2009/125/EC)
Saving electric energy is a key to help protecting the enviroment. Please turn off all electrical products when they are not in use. To avoid power consumption in idle mode, disconnect all electrical equipment from power when not in use. Thank you!

DOCUMENT VERSION

Due to additional product features and/or enhancements, an updated version of this document may be available online.
Please check www.adj.com for the latest revision/update of this manual before beginning installation and/or programming.

Date	Document Version	Software Version	DMX Channels	Notes
06/24/2024	1.0	1.0.1	24 / 27 / 32 Ch.	Initial release
07/24/2024	1.1	N/C	No Changes	Updated Specifications

CONTENTS

Introduction	4
Limited Warranty (USA Only)	5
Warranty Registration l Features	6
IP65 Rated	7
Safety Precautions	8
Discharge Lamp Warning	10
Lamp Replacement	11
Overview	13
Installation Guidelines	14
Colors l Animation Wheel	18
Gobos	19
Gobo Replacement	21
Remote Device Management (RDM)	22
Control Panel	23
System Menu	24
DMX Set Up	29
DMX Traits	31
Color Macros Chart	38
Primary-Secondary Set Up l Multi Unit Power Linking	39
Maintenance Guidelines	40
Torque Settings for Screws	41
IP Test Parameters	42
Error Codes	43
Dimensional Drawings	44
Specifications	45
FCC Statement	46

INTRODUCTION

Unpacking: Thank you for purchasing the Hydro Hybrid by ADJ Products, LLC. Every device has been thoroughly tested and has been shipped in perfect operating condition. Carefully check the shipping carton for damage that may have occurred during shipping. If the carton appears to have been damaged, carefully inspect your fixture for any damage and be sure all accessories necessary to operate the unit have arrived intact. In the event that damage has been found or parts are missing, please contact our toll free customer support number for further instructions. Do not return this unit to your dealer without first contacting customer support.

Introduction: Part of ADJ's Hydro Series, the Hydro Hybrid is a IP65-rated hybrid moving head that produces a beam, spot and wash effect powered by a 420-Watt Osram SIRIUS HRI discharge lamp. **This product is intended to be used by professionally trained personnel only and is not suitable for private use.**

Customer Support: Contact ADJ Service for any product related service and support needs. Also visit **forums.adj.com** with questions, comments or suggestions.

Parts: To purchase parts online visit:
http://parts.adj.com (US)
http://www.adjparts.eu (EU)

ADJ SERVICE USA - Monday - Friday 8:00am to 4:30pm PST
Voice: 800-322-6337 I support@adj.com

ADJ SERVICE EUROPE - Monday - Friday 08:30 to 17:00 CET
Voice: +31 45 546 85 60 I Fax: +31 45 546 85 96 I support@adj.eu

ADJ PRODUCTS LLC USA
6122 S. Eastern Ave. Los Angeles, CA. 90040
323-582-2650 I www.adj.com I info@adj.com

ADJ SUPPLY Europe B.V
Junostraat 2 6468 EW Kerkrade, The Netherlands
+31 (0)45 546 85 00 I Fax +31 45 546 85 99
www.adj.eu I info@adj.eu

ADJ PRODUCTS GROUP Mexico
AV Santa Ana 30 Parque Industrial Lerma, Lerma, Mexico 52000
+52 (728) 282-7070

CAUTION! There are no user serviceable parts inside this unit. Do not attempt any repairs yourself, as doing so will void your manufacturer's warranty. In the unlikely event your unit may require service, please contact ADJ Products, LLC.

Do not discard the shipping cartoon in the trash. Please recycle when ever possible.

LIMITED WARRANTY (USA ONLY)

A. ADJ Products, LLC hereby warrants, to the original purchaser, ADJ Products, LLC products to be free of manufacturing defects in material and workmanship for a prescribed period from the date of purchase (see specific warranty period on reverse). This warranty shall be valid only if the product is purchased within the United States of America, including possessions and territories. It is the owner's responsibility to establish the date and place of purchase by acceptable evidence, at the time service is sought.

B. For warranty service, you must obtain a Return Authorization number (RA#) before sending the product back—please contact ADJ Products, LLC Service Department at 800-322-6337. Send the product only to the ADJ Products, LLC factory. All shipping charges must be prepaid. If the requested repairs or service (including parts replacement) are within the terms of this warranty, ADJ Products, LLC will pay return shipping charges only to a designated point within the United States. If the entire instrument is sent, it must be shipped in its original package and packaging material. No accessories should be shipped with the product. If any accessories are shipped with the product, ADJ Products, LLC shall incur no liability whatsoever for loss of or damage to any such accessories, nor for the safe return thereof.

C. This warranty is void if the product serial number and/or labels are altered or removed; if the product is modified in any manner which ADJ Products, LLC concludes, after inspection, affects the reliability of the product; if the product has been repaired or serviced by anyone other than the ADJ Products, LLC factory unless prior written authorization was issued to purchaser by ADJ Products, LLC; if the product is damaged because it was not properly maintained as set forth in the product instructions, guidelines and/or user manual.

D. This is not a service contract, and this warranty does not include maintenance, cleaning, or periodic check-up. During the period specified above, ADJ Products, LLC will replace defective parts at its expense with new or refurbished parts, and will absorb all expenses for warranty service and repair labor by reason of defects in material or workmanship. The sole responsibility of ADJ Products, LLC under this warranty shall be limited to the repair of the product, or replacement thereof, including parts, at the sole discretion of ADJ Products, LLC. All products covered by this warranty were manufactured after August 15, 2012, and bear identifying marks to that effect.

E. ADJ Products, LLC reserves the right to make changes in design and/or improvements upon its products without any obligation to include these changes in any products theretofore manufactured.

F. No warranty, whether expressed or implied, is given or made with respect to any accessory supplied with products described above. Except to the extent prohibited by applicable law, all implied warranties made by ADJ Products, LLC in connection with this product, including warranties of merchantability or fitness, are limited in duration to the warranty period set forth above. And all warranties, whether expressed or implied, including warranties of merchantability or fitness, are limited in duration to the warranty period set forth above. The consumer's and/or dealer's sole remedy shall be such repair or replacement as is expressly provided above; and under no circumstances shall ADJ Product, LLC be liable for any loss and/or damage, direct and/or consequential arising out of the use of, and/or inability to use this product.

G. This warranty is the only written warranty applicable to ADJ Products, LLC products, and supersedes all prior warranties and written descriptions of warranty terms and conditions heretofore published.

MANUFACTURER'S LIMITED WARRANTY PERIODS:

- Non-LED Lighting Products = 1-Year (365 Days) (Including Special Effect Lighting, Intelligent Lighting, UV lighting, Strobes, Fog Machines, Bubble Machines, Mirror Balls, Par Cans, Trussing, Lighting Stands, Power/Data Distribution, etc. excluding LED and lamps)
- Laser Products = 1-Year (365 Days) (excluding laser diodes which have a 6-Month Limited Warranty)
- LED Products = 2-Year (730 Days) (excluding batteries which have a 180 Day Limited Warranty)
- NOTE: 2-Year (730 Days) Limited Warranty ONLY applies to product purchased within the United States. StarTec Series = 1-Year (365 Days) (excluding batteries which have a 180 Day Limited Warranty)
- ADJ DMX Controllers = 2 Year (730 Days)
- American Audio Products = 1 Year (365 Days)

WARRANTY REGISTRATION

Please fill out the enclosed warranty card to validate your purchase. All returned service items, whether under warranty or not, must be freight pre-paid and accompanied by a return authorization (R.A.) number. The R.A. number must be clearly written on the outside of the return package. A brief description of the problem as well as the R.A. number must also be written down on a piece of paper included in the shipping carton. If the unit is under warranty, you must provide a copy of your proof of purchase invoice. You may obtain an R.A. number by contacting our customer support team. All packages returned to the service department not displaying an R.A. number on the outside of the package will be returned to the shipper.

FEATURES

- IP65 Rated Housing
- 420-War Osram Sirius HRI Lamp Power Source
- Two Prisms on Dual Planes
- Motorized Zoom and Focus
- 2 Gobo Wheels - 9 Rotating/Removeable Gobos and 14 Fixed Gobos
- CMY Color Mixing System
- 12 Colors on Built-In Color Wheel
- Preset White Color Temperature Macros
- Full Power Mode and Eco Mode
- Three DMX Channel Modes
- RDM

INCLUDED ITEMS

- Power Cable

IP65 RATED

The International Protection (IP) rating system is commonly expressed as "**IP**" (Ingress Protection) followed by two numbers (i.e. IP65), where the numbers define the degree of protection. The first digit (Foreign Bodies Protection) indicates the extent of protection against particles entering the fixture, and the second digit (Water Protection) indicates the extent of protection against water entering the fixture. An **IP65** rated lighting fixture is designed and tested to protect against the ingress of dust (6), and low-pressure water jets from any direction (**5**).

NOTE: THIS FIXTURE IS INTENDED FOR TEMPORARY OUTDOOR USE ONLY!

Maritime/Coastal Environment Installations: A coastal environment is seaside adjacent, and caustic to electronics through exposure to atomized salt-water and humidity, whereas maritime is anywhere within 5-miles of a coastal environment.



NOT suitable for maritime/coastal environment installations. Installing this fixture in a maritime/coastal environment may cause corrosion and/or excessive wear to the interior and/or exterior components of the fixture. Damages and/or performance issues resulting from installation in a maritime/coastal environment will void the manufactures warranty, and will NOT be subject to any warranty claims and/or repairs.

Maritime installations require additional preparation, and additional service intervals may be needed given the maritime use. In general, IP ratings presuppose freshwater conditions VS maritime conditions, which are typically more "caustic" to IP fixtures (both internally and externally). A duty-cycle may also be needed when units are not in use. During times of high humidity and colder temperatures, condensation may occur internally so the fixture may require a duty-cycle to bring it up to running temperature, allowing any accumulation of moisture to be expelled via the vent valve. Recommendations can change based on installation environmental circumstances. A waterproof dome or similar device is recommended for use in permanent outdoor installations. When using a dome, refer to manufacturer recommendations for duty-cycle.

NOTE: NOT ALL FEATURES LISTED ARE AVAILABLE ON ALL FIXTURES; THE FOLLOWING INSTRUCTIONS MAY NOT APPLY. CONTACT SUPPORT FOR ADDITIONAL DETAILS.

Exterior Maintenance: Inspect the exterior every 30-days. The unit must be powered off/disconnected. Inspect optics to determine if the lens is obstructed, then clean optics and chassis accordingly. Based on initial finding, schedule maintenance accordingly, keeping in mind that exterior maintenance will be required. Even if the luminaires are NOT in use, maintenance will still be needed given its location (exterior use). The use of a durable type of wax on the chassis is recommended since it will help prevent contaminant build up. Inspect both power and data lines for any signs of contaminants or corrosion. Periodically reapplying di-electric grease, especially in coastal environments. If any signs of corrosion/contaminants are present, clean thoroughly, and/or replace connectors, then reapply di-electric grease. Typically, this should be done annually, or any time an opportunity presents itself. As a preventive measure, annual replacement of both vent valves is recommended. The vent valve membrane can become contaminated and/or clogged causing improper venting of humidity within the luminaire. Inspect all mounting hardware as a precaution.

Interior Maintenance: Inspect the interior every 30-days. The unit must be powered off/disconnected.

- Inspect zoom/focus mechanism, clean optics, lubricate linear bearings (Krytox oil) as needed, inspect belts for wear
- Inspect all rotating effect wheels, manually rotate them, note any resistance
- Inspect all remaining rotating belts for any wear
- Inspect all fans, clean as needed, check rotation, check connections
- Inspect CMY module, manually move flags and check for signs of resistance, and if needed, clean guide rods first, then reapply a thin layer of grease (moly lube)
- Clean interior with low-volume compressed air, then clean optics prior to reassembly of head covers

Although the base has limited moving parts, the pan belt should also be inspected for wear. Remember to always perform an IP test anytime a cover is removed.

There is no specific time frame regarding the routine replacement of parts such as belts/stepper motors, PCBs, or LEDs. These items should only be replaced on an as needed bases, except for cooling fans, which should be replaced once the luminaries reach 10,000-hours. This is a prophylactic measure intended to keep the unit running as cool as possible, insuring proper function of all internal components. A complete service breakdown is available, please contact service@adj.com for any needed parts or manuals.

SAFETY PRECAUTIONS



RISK GROUP 3 - RISK OF EXPOSURE TO ULTRAVIOLET UV RADIATION! THE FIXTURE EMITS A HIGH-INTENSITY WAVELENGTH OF ULTRAVIOLET UV LIGHT FROM THE UV COLOR FILTER. WEAR PROPER EYE AND SKIN PROTECTION.

AVOID PROLONGED PERIODS OF EXPOSURE TO THE UV COLOR FILTER.

AVOID WEARING WHITE CLOTHING AND/OR USING UV PAINTS ON THE SKIN.

AVOID DIRECT EYE AND/OR SKIN EXPOSURE AT DISTANCES LESS THAN 11 FEET (3.3M).

DO NOT OPERATE THE FIXTURE WITH DAMAGED/MISSING EXTERNAL COVERS.

DO NOT LOOK DIRECTLY INTO THE UV LIGHT AND/OR VIEW UV LIGHT DIRECTLY WITH OPTICAL INSTRUMENTS THAT MAY CONCENTRATE THE LIGHT/RADIATION OUTPUT.

INDIVIDUALS SUFFERING FROM A RANGE OF EYE CONDITIONS, SUNLIGHT EXPOSURE DISORDERS, OR INDIVIDUALS USING PHOTOSENSITIVE MEDICATION MAY EXPERIENCE DISCOMFORT IF EXPOSED TO THE ULTRAVIOLET UV LIGHT EMITTED FROM THE UV LED.

SAFETY PRECAUTIONS



PROTECTION CLASS 1 - FIXTURE MUST BE PROPERLY GROUNDED.



THERE ARE NO USER SERVICEABLE PARTS INSIDE THIS UNIT. DO NOT ATTEMPT ANY REPAIRS YOURSELF, AS DOING SO WILL VOID YOUR MANUFACTURER'S WARRANTY. DAMAGES RESULTING FROM MODIFICATIONS TO THIS FIXTURE AND/OR THE DISREGARD OF SAFETY INSTRUCTIONS AND GUIDELINES IN THIS MANUAL VOID THE MANUFACTURER'S WARRANTY AND ARE NOT SUBJECT TO ANY WARRANTY CLAIMS AND/OR REPAIRS.



NEVER LOOK DIRECTLY INTO THE LIGHT SOURCE!
RETINA INJURY RISK - MAY INDUCE BLINDNESS!
SENSITIVE PERSONS MAY SUFFER AN EPILEPTIC SHOCK!

- ***Maximum ambient operating temperature is 113°F (45°C)!***
- DO NOT TOUCH the fixture housing during operation. Disconnect the power and allow approximately 15 minutes for the fixture to cool down before servicing.
- DO NOT shake the fixture, and avoid brute force when installing and/or operating the fixture.
- DO NOT operate the fixture if the power cord has become frayed, crimped and/or damaged. If the power cord is damaged, replace immediately with a new one of the same power rating.
- DO NOT attempt to remove or break off the ground prong from the electrical cord. This prong is used to reduce the risk of electrical shock and fire in case of an internal short.
- DO NOT attempt to operate this unit if it has been damaged in any way.
- Disconnect from main power before making any type of connection.
- DO NOT block any air ventilation slots. All fan and air inlets must remain clean and never blocked. Allow approx. 6" (15cm) between fixture and other devices or a wall for proper cooling.
- Always be sure to mount this unit in an area that will allow proper ventilation. Allow about 6" (15cm) between this device and a wall.
- DO NOT remove the cover for any reason.
- When installing fixture in a suspended enviroment, always use mounting hardware that is no less than M10 x 25mm, and always install fixture with an appropriately rated safety cable.
- Never plug this unit in to a dimmer pack.
- During long periods of non-use, disconnect the unit's main power.
- Always mount this unit in safe and stable matter.
- Power-supply cords should be routed so that they are not likely to be walked on or pinched by items placed upon or against them, paying particular attention to the point where they exit from the unit.
- Cleaning - The fixture should be cleaned only as recommended by the manufacturer.
- Heat - The appliance should be situated away from heat sources such as radiators, heat registers, stoves, or other appliances (including amplifiers) that produce heat.
- The fixture should be serviced by qualified service personnel when:
  A. The power-supply cord or the plug have been damaged.
  B. Objects have fallen onto, or liquids have been spilled into, the fixture.
  C. The fixture does not appear to operate normally or exhibits a marked change in performance.
  D. The fixture has fallen and/or has been subjected to extreme handling.

DISCHARGE LAMP WARNING

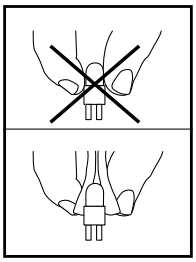

This fixture is equipped with a DISCHARGE LAMP, which is highly susceptible to damage if mishandled. NEVER touch the lamp with your bare hands, as the oil from your hands will shorten the lamp's life. NEVER move the fixture until the lamp has had ample time to cool. DISCHARGE LAMPS are NOT covered under warranty conditions. Avoid switching the fixture ON and OFF repeatedly in short intervals, as this will reduce lamp life and intensity. To achieve the intensity associated with discharge lamps, these lamps use gas sealed in a high-pressure environment to emit a brilliant output.

Due to the high pressure involved in the construction of the lamp, it **MAY EXPLODE DURING PROLONGED EXTENSIVE USE**. This risk increases with age; added care is encouraged when dealing with older lamps. Thus, the lamp must always be replaced at the end of its recommended duty cycle. Extreme caution should be used when operating this or any fixture fitted with a gas discharge lamp.

UV RADIATION NOTICE

THIS FIXTURE EMITS INTENSE UV RADIATION, WHICH IS HARMFUL TO THE EYES AND SKIN. THE INTENSE LUMINESCENCE OF THE LAMP CAN CAUSE SEVERE DAMAGE TO THE RETINA. NEVER OPERATE THIS FIXTURE WITH ANY OF THE PROTECTIVE COVERS REMOVED. THESE COVERS HAVE BEEN SPECIALLY DESIGNED TO SHIELD AGAINST UV RADIATION.

LAMP REPLACEMENT

USE ONLY GENUINE ORIGINAL OSRAM LAMPS. OTHER BRAND LAMPS WILL CAUSE DAMAGE AND VOID THE FIXTURE WARRANTY!

DISCONNECT THE MAIN POWER SUPPLY BEFORE REPLACING THE LAMP!
THE FIXTURE MUST COOL FOR 15 MINUTES BEFORE REPLACING THE LAMP!
NEVER TOUCH THE LAMP WITH BARE HANDS; ALWAYS WEAR GLOVES!
OIL FROM HANDS WILL SHORTEN THE LIFE OF THE LAMP!

MAKE SURE ALL COVERS/FIXTURES ARE REPLACED/SECURED BEFORE OPERATING THE FIXTURE TO PREVENT ANY RISK AND/OR DAMAGE TO THE EYE RETINA FROM UV RADIATION EXPOSURE!

LAMP REPLACEMENT

Caution: Always replace with the exact same type of lamp, unless otherwise specified by an authorized ADJ service technician. Replacing with anything other than the specified part can damage your unit and will void your manufacturer's warranty.

Warning: If you continue to blow lamps or fuses, STOP using the unit. Contact customer support for further instructions; you may have to return the unit for servicing. Continuing to use the unit may cause serious damage.

Lamp Replacement: Caution! Never attempt to change the lamp while the fixture is plugged in. Always disconnect the main power and allow the unit ample time to cool before attempting to replace the lamp. Please see the **Discharge Lamp Warning** section of this manual for important information regarding the discharge lamp.

PLEASE NOTE: If you choose to perform this procedure yourself, you MUST re-install and re-torque the designated screws as listed in the *TORQUE SETTINGS FOR SCREWS* section, then check for leakage in accordance with the directions in the *IP TEST PARAMETERS* section. This will ensure that the fixture maintains its IP65 rating after re-assembly. If you are not comfortable with performing these steps, contact ADJ Service for assistance.

1. Set the fixture on a flat, stable surface and engage both the pan and tilt locks. Loosen the screws holding the front and rear cover of the head in place, then remove both covers.

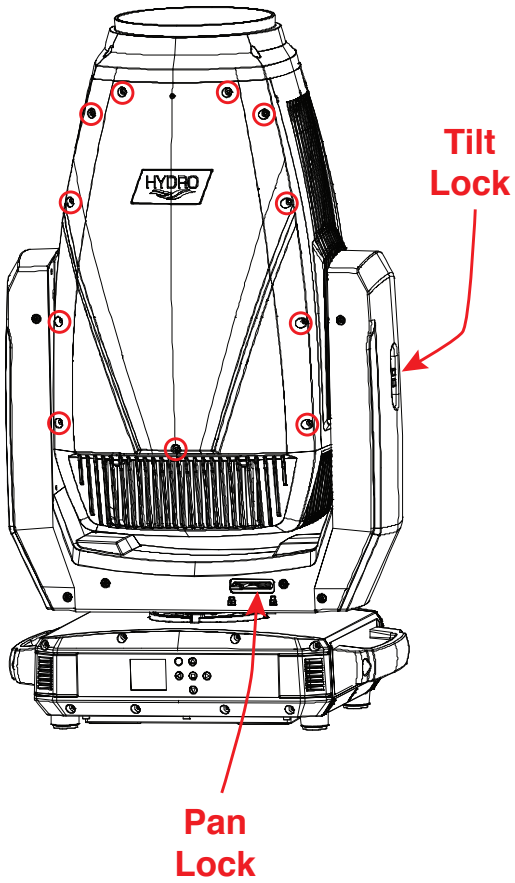

2. Locate the air guide nozzle assembly, and loosen the two screws holding it in place. Remove the air guide nozzle assembly.

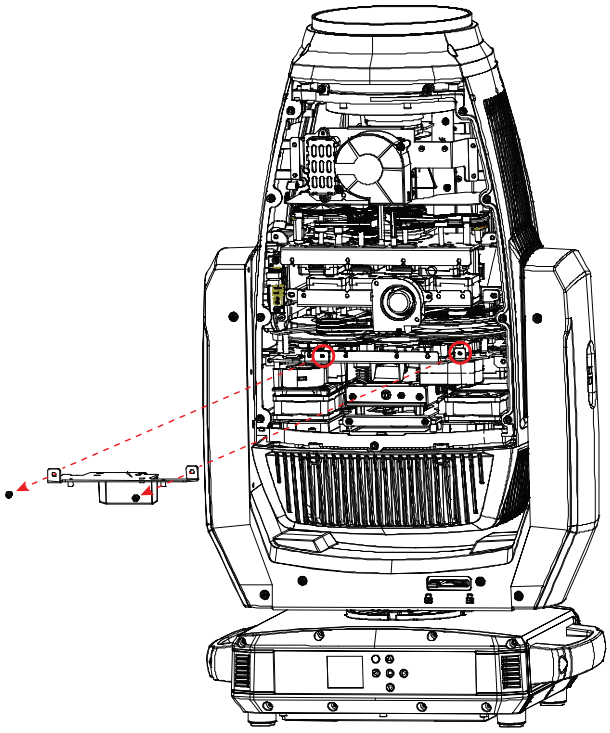

LAMP REPLACEMENT

3. Locate the bulb assembly, and loosen the two screws holding it in place. Remove the bulb assembly.

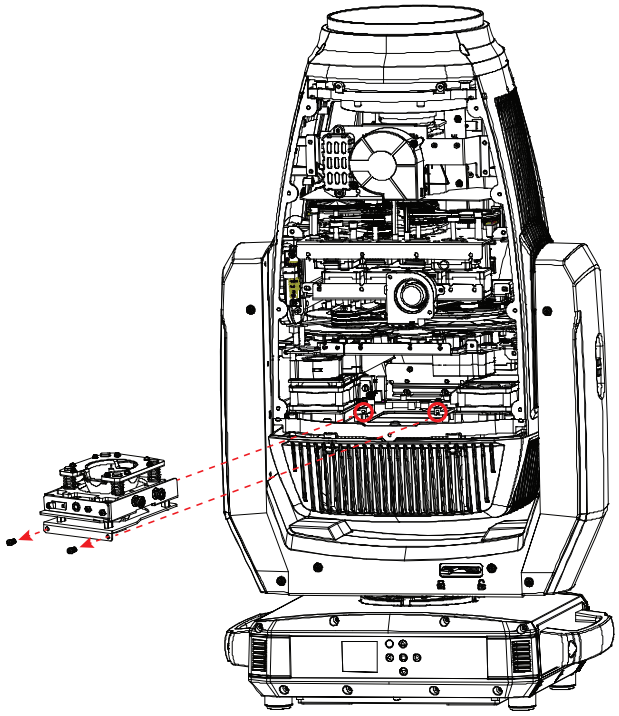

4. Carefully twist the bulb to detach it from the bulb assembly, then remove and replace with a new bulb. Re-assemble the fixture by reversing these instructions.

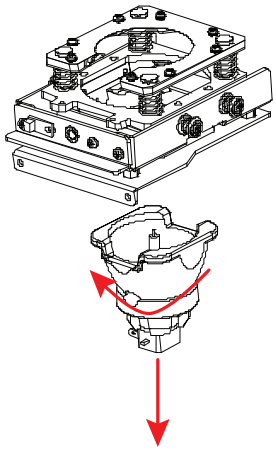

OVERVIEW

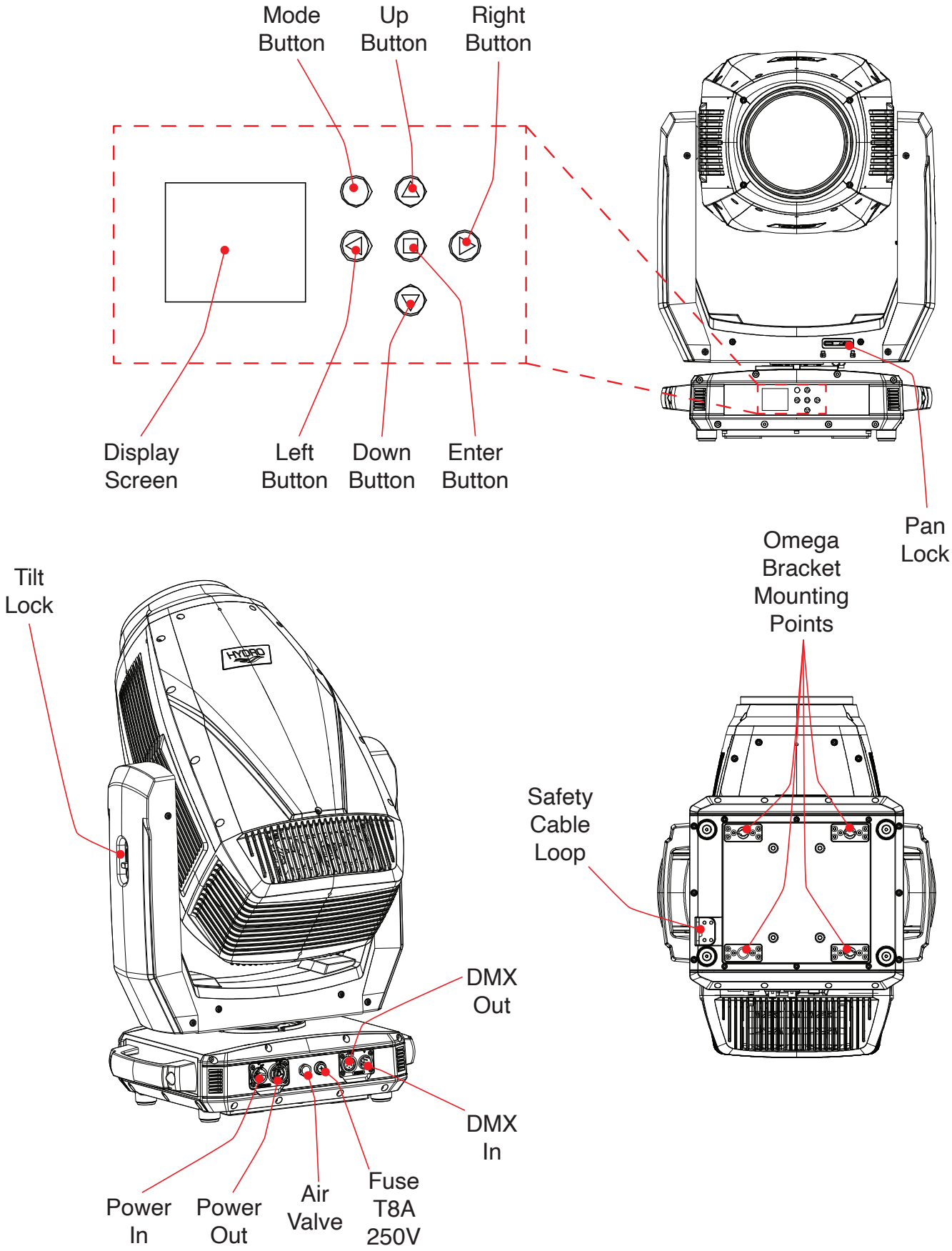
Mode Button
Up Button
Right Button
Display Screen
Left Button
Down Button
Enter Button
Pan Lock
Tilt Lock
Omega Bracket Mounting Points
Safety Cable Loop
DMX Out
DMX In
Power In
Power Out
Air Valve
Fuse T8A 250V

INSTALLATION GUIDELINES



DO NOT INSTALL THE FIXTURE IF YOU ARE NOT QUALIFIED TO DO SO!

Fixture MUST be installed following all local, national, and country commercial electrical and construction codes and regulations.

When installing the unit, the trussing or area of installation must be able to hold 10 times the weight of the unit and any attached accessories without any deformation. The unit must be secured with a secondary safety attachment, e.g. an appropriately-rated safety cable.

Before rigging/mounting a single fixture to any metal truss/structure or placing the fixture(s) on any surface, a professional equipment installer MUST be consulted to determine if the metal truss/structure or surface is properly certified to safely hold the combined weight of the fixture(s), clamps, cables, and accessories.

Ambient operating temperature range for this fixtire is ***-40°F to 113°F (-40°C to 45°C).*** Do not operate this device when ambient temperature exceeds this value!

Fixture(s) should be installed away from walking paths, seating areas, or areas where unauthorized personnel might reach the fixture by hand.

NEVER stand directly below the fixture(s) when rigging, removing, or servicing.

Overhead fixture installation must always be secured with a secondary safety attachment, such as an appropriately rated safety cable that can hold 10 times the weight of the fixture.

Overhead mounting requires extensive experience, including calculating working load limits, knowledge of installation material being used, and perodic safety inspection of all installation material as well as the unit itself. If you lack these qualifications, do not attempt the installation yourself.

The installation should be checked by a skilled person once a year.

INSTALLATION GUIDELINES

CLAMP MOUNTING

When mounting the fixture to a truss or any other suspended structure, secure an appropriately rated clamp to an Omega bracket using a properly rated nut and bolt, then attach the Omega bracket to the mounting points on the underside of the unit. ***Please note that two clamps and two Omega brackets are required to securely install the unit.*** Additionally, a safety cable of the appropriate weight rating should be secured through the safety cable loop located on the underside of the unit near the carrying handle.

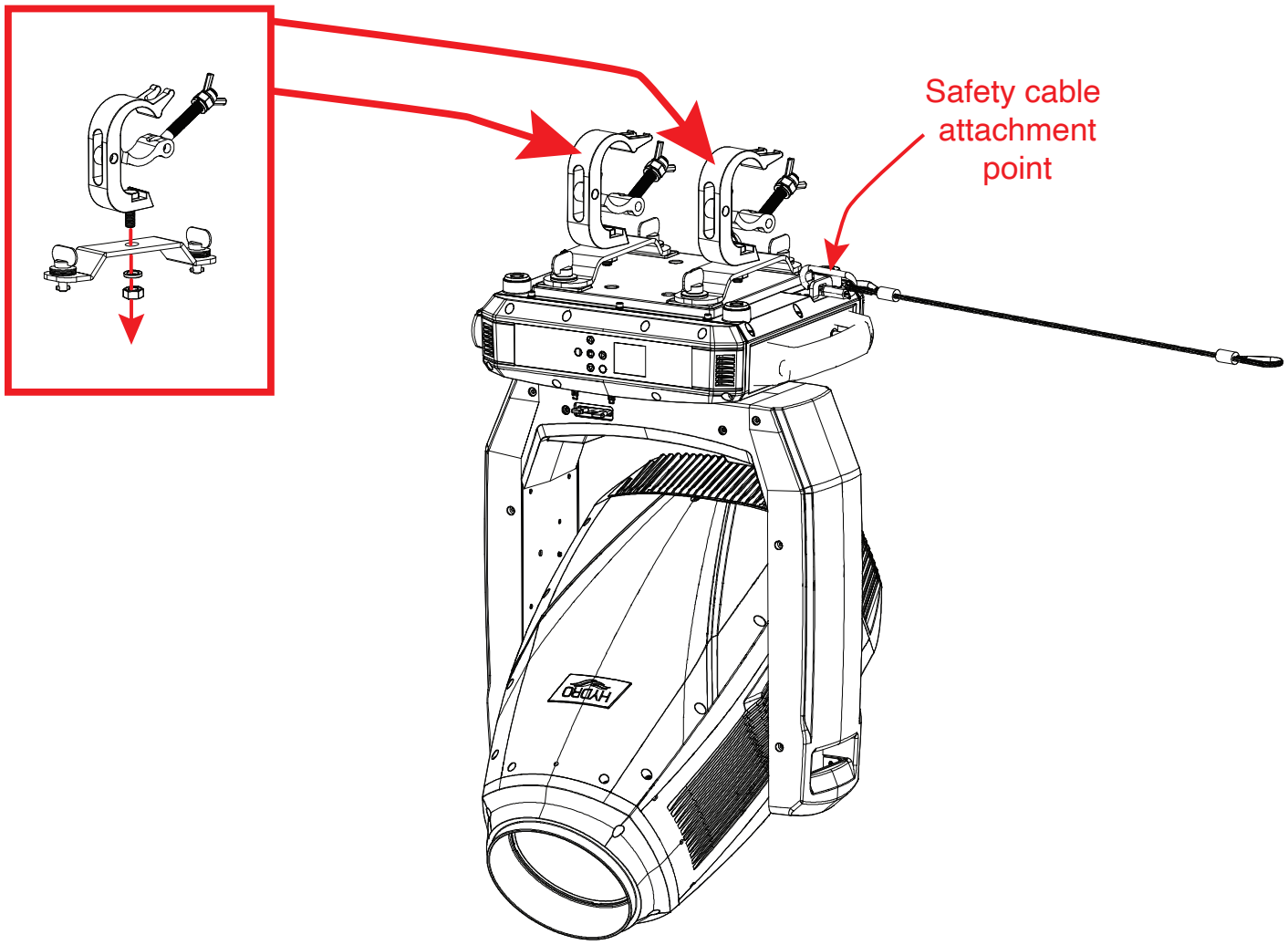

SAFETY CABLE:

ALWAYS ATTACH A SAFETY CABLE WHENEVER INSTALLING THIS FIXTURE IN A SUSPENDED ENVIRONMENT TO ENSURE THAT THE FIXTURE WILL NOT FALL IF THE CLAMP FAILS.

INSTALLATION GUIDELINES

POTENTIAL INTERNAL FIXTURE DAMAGE FROM EXTERNAL SOURCES OF LIGHT BEAMS

External sources of light beams from direct sunlight, lighting moving head fixtures, and lasers, which are focused directly towards the exterior housing and/or penetrate the front lens opening of ADJ lighting fixtures, can cause severe internal damage including burning to optics, dichroic color filters, glass and metal gobos, prisms, animation wheels, frost filters, iris, shutters, motors, belts, wiring, discharge lamps, and LEDs.

This issue is not specific only to ADJ lighting fixtures, it is a common issue with lighting fixtures from all manufacturers. Although there is no true way to fully prevent this issue from happening, the guidelines below can prevent any potential damage from occurring if followed. Contact ADJ Service for more details.

DO NOT EXPOSE THE FIXTURE AND/OR FRONT LENS OPENING TO LIGHT BEAMS FROM DIRECT SUNLIGHT, OTHER LIGHTING MOVING HEAD FIXTURES, AND LASERS WHILE UNPACKING, INSTALLATION, USE, AND EXTENDED IDLE TIMES OUTDOORS. DO NOT FOCUS A LIGHT BEAM FROM ONE LIGHTING FIXTURE DIRECTLY TOWARDS ANOTHER.

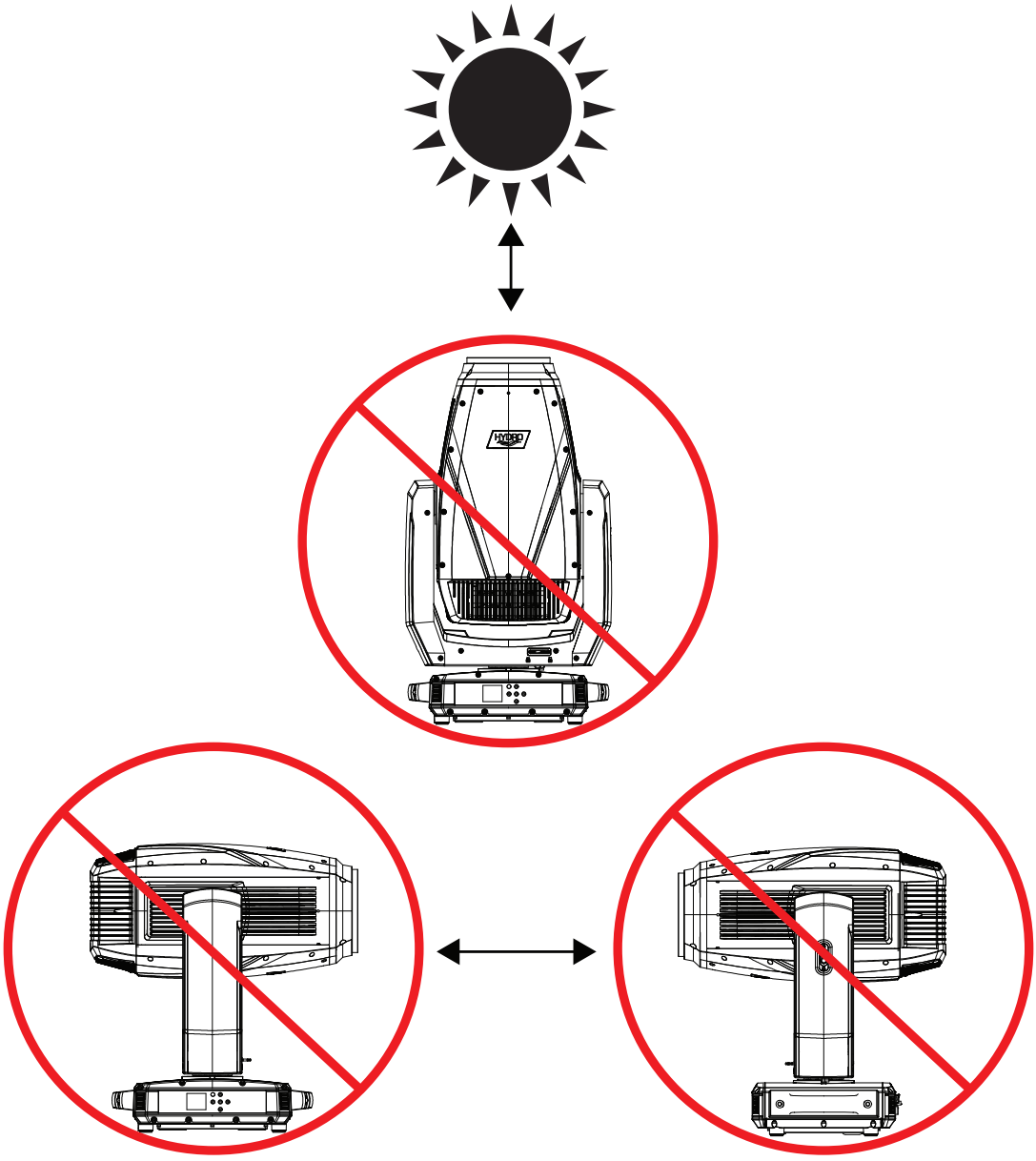

INSTALLATION GUIDELINES

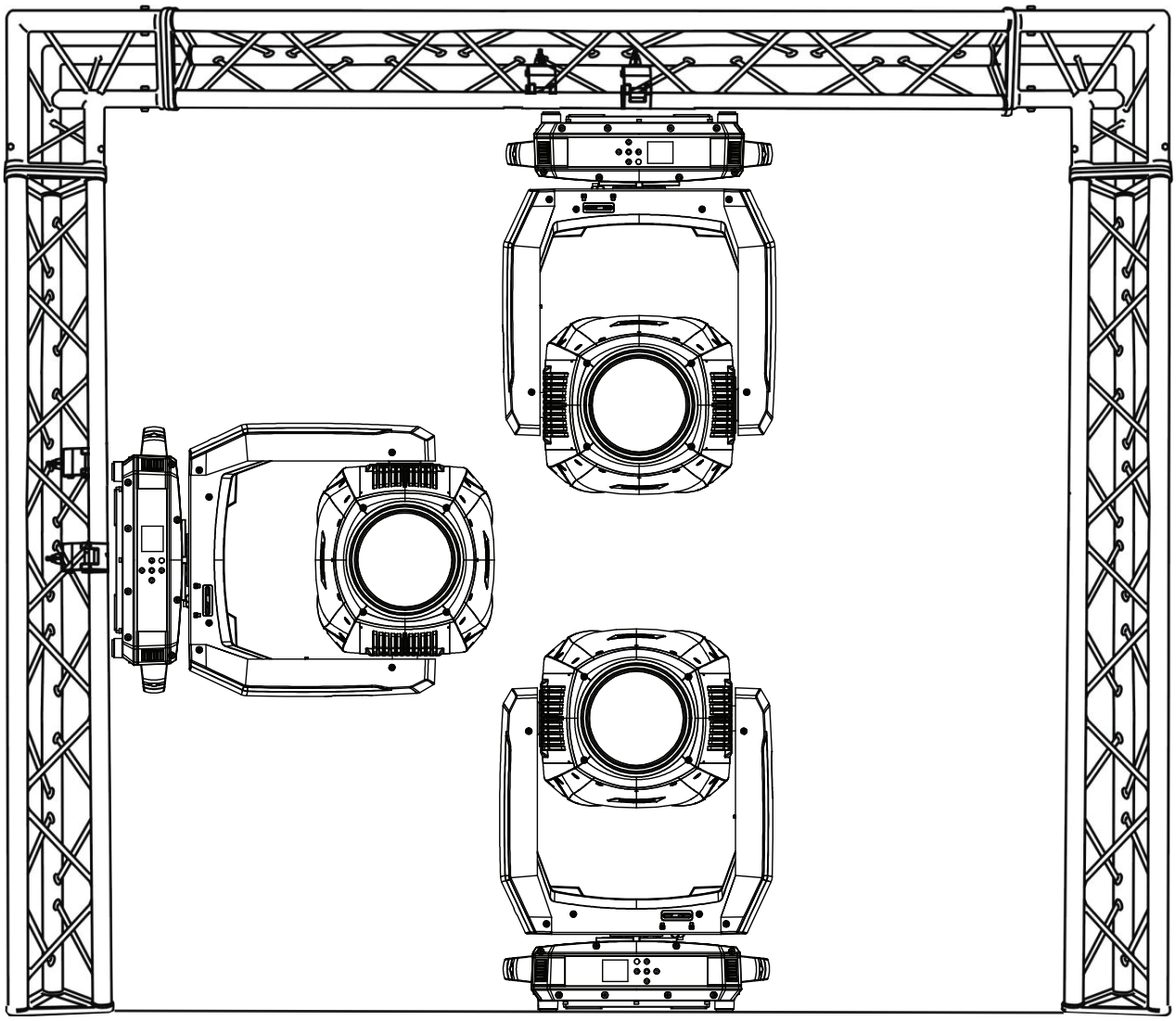

The unit is fully operational in three different mounting positions: hanging upside-down from the ceiling or trussing, sideways on trussing, or set on a flat level surface. Be sure this fixture is kept at least 12m (40ft) away from any flammable materials (decorations, etc). Always use and install a safety cable (not included) as a safety measure to prevent accidental damage and/or injury in the event the clamp fails. Never use the carrying handles for secondary attachment.

FALLING FIXTURES CAN CAUSE SEVERE INJURY OR SERIOUS EQUIPMENT DAMAGE! FOR THIS REASON, FIXTURES SHOULD BE INSTALLED AND INSPECTED ONLY BY QUALIFIED PERSONNEL. DO NOT INSTALL THE UNIT IF YOU LACK THE QUALIFICATIONS TO DO SO, OR IF YOU HAVE DOUBTS ABOUT THE SAFETY AND SECURITY OF THE INSTALLATION SETUP OR LOCATION!

ALWAYS ATTACH A SAFETY CABLE WHENEVER INSTALLING THIS FIXTURE IN A SUSPENDED ENVIRONMENT TO ENSURE THAT THE FIXTURE WILL NOT FALL IF THE CLAMP FAILS.

COLORS

COLOR WHEEL

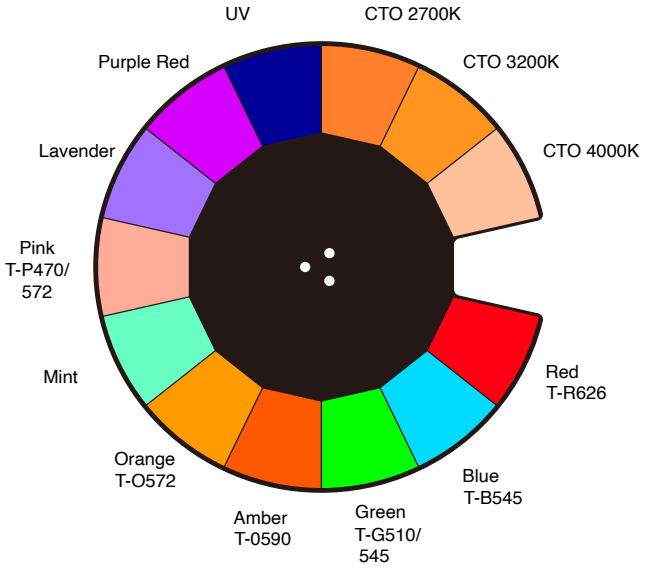

CMY

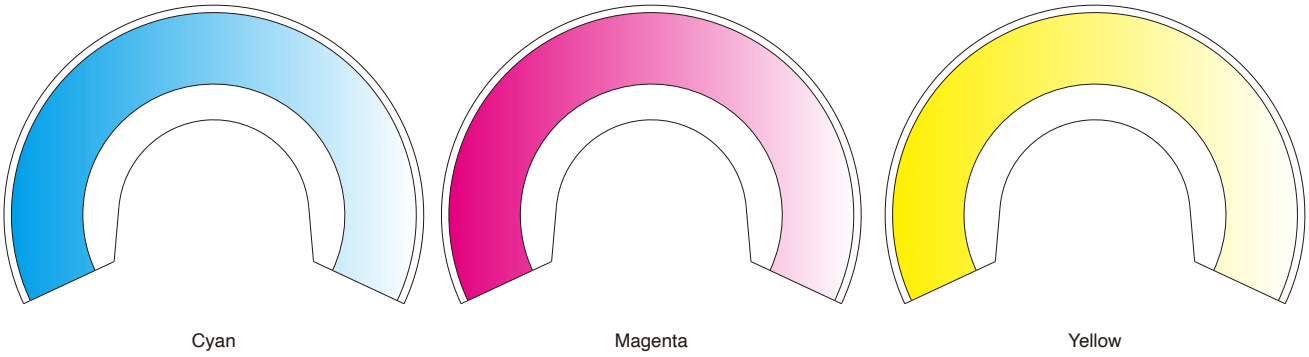

ANIMATION WHEEL

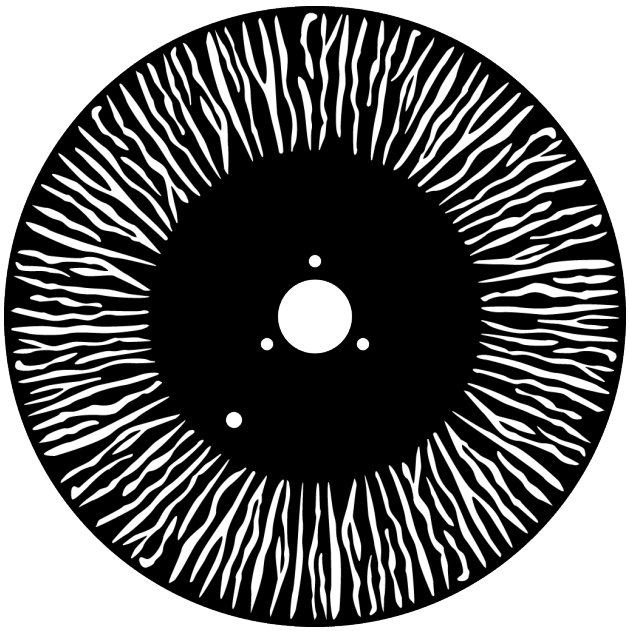

GOBOS

FIXED GOBOS

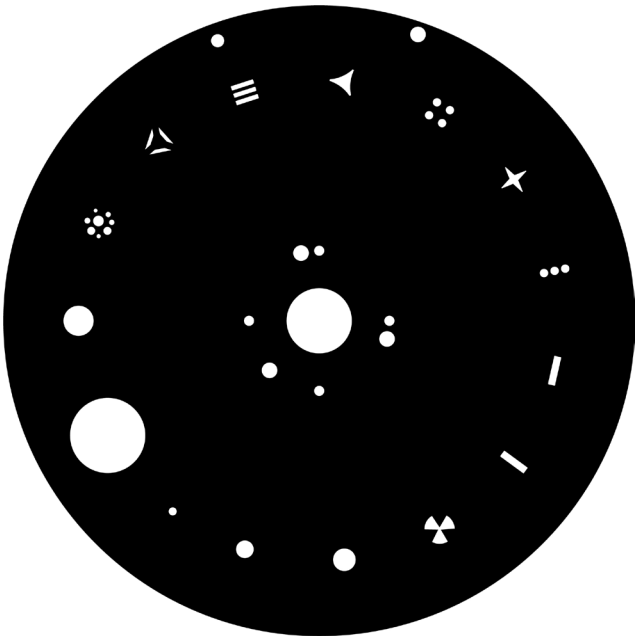

ROTATING GOBOS

1 2 3 4 5

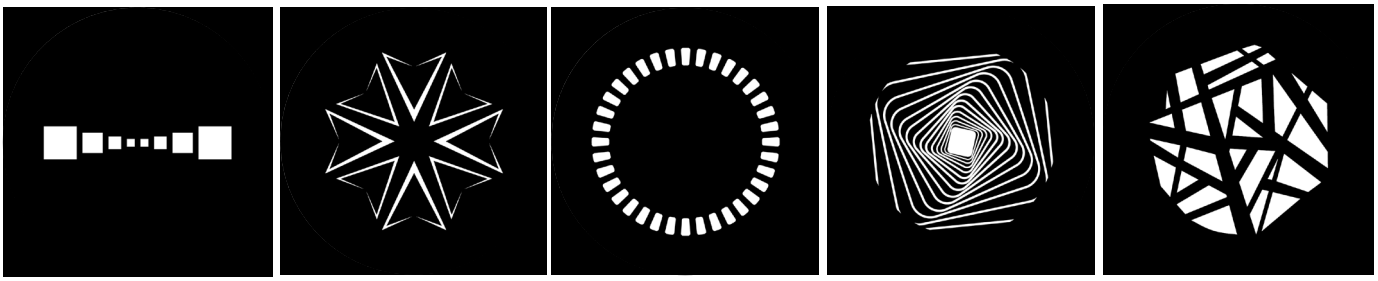

6 7 8 9

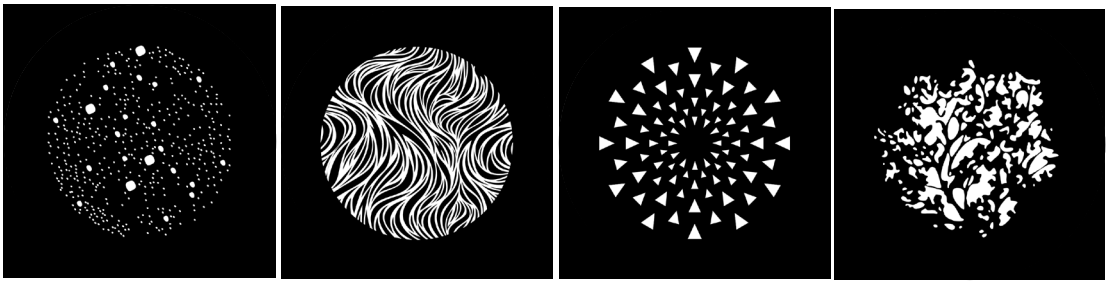

GOBOS

DIMENSIONS

ROTATING GOBO WHEEL DIMENSIONS	
Gobo O.D. (Max Outer Diameter)	ø 17mm
Gobo I.D. (Max Image Diameter)	ø 12mm
Gobo Thickness	1.1mm
Gobo Material	Glass

GOBO

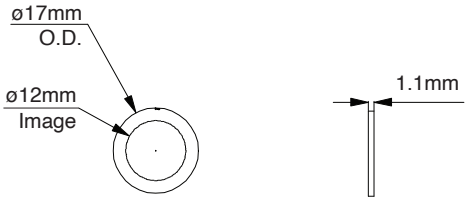

GOBO HOLDER

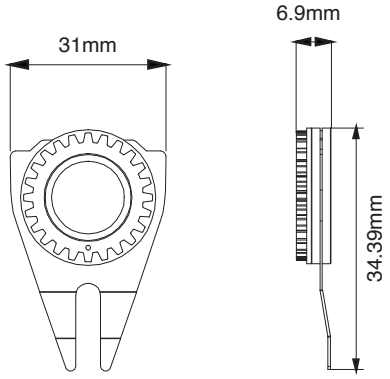

Please be aware of the intended position and correct sizing requirements of custom gobos.
*** * * IMPORTANT NOTICE REGARDING CUSTOM GOBOS * * ***

Due to the high temperature optical system, special material is required for custom gobos. Due to varying manufacturing processes and tolerances, it is highly recommended to provide a gobo sample and holder from the fixture to the custom gobo vendor for accurate sizing. Extended testing of custom gobo designs is highly recommended prior to use. Contact ADJ SERVICE for further information.

ADJ SERVICE USA - Monday - Friday 8:00am to 4:30pm PST
Voice: 800-322-6337 I support@adj.com

ADJ SERVICE EUROPE - Monday - Friday 08:30 to 17:00 CET
Voice: +31 45 546 85 60 I Fax: +31 45 546 85 96 I support@adj.eu

GOBO REPLACEMENT

1. Set the fixture on a flat, stable surface, orient the head with the lens pointing upwards, and engage both the pan and tilt locks. Loosen the screws holding the front cover (on the same side as the pan lock) in place, then remove the cover.

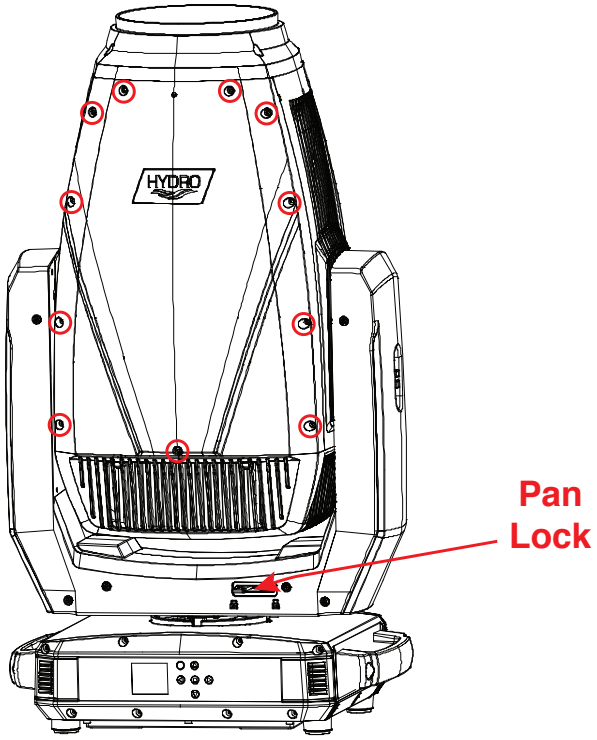

2. Locate the gobo module assembly, which can be identified by the small fan attached to the module. Loosen the two screws holding it in place and remove the gobo module assembly.

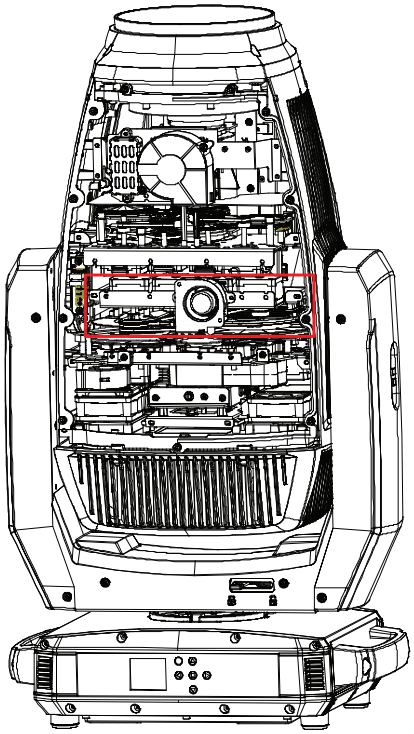

3. Firmly grasp the desired gobo holder, pulling downwards and away from the gobo wheel. When the gobo holder is clear of its slot, pull the gobo holder radially outward to remove the gobo holder from the gobo wheel.

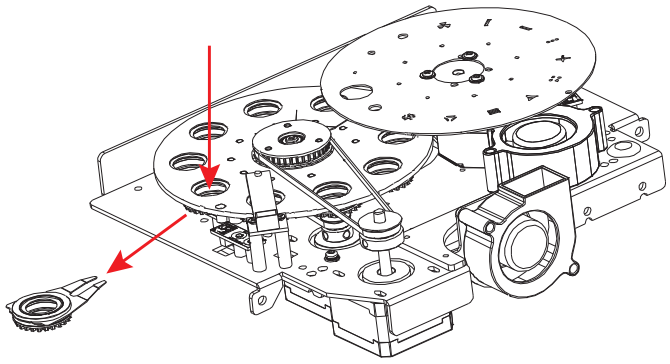

4. Remove the retainer ring by using a pick or similar tool to catch the tip of the ring, and use caution to avoid scratching or damaging the gobo. Remove the retainer ring from the gobo holder, then remove the gobo itself. Insert the new gobo, and reverse these steps to re-assemble.

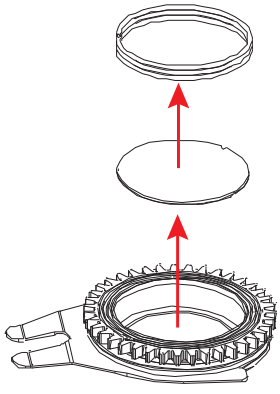

REMOTE DEVICE MANAGEMENT (RDM)

NOTE: In order for RDM to work properly, RDM enabled equipment must be used throughout the entire system, including DMX data splitters and wireless systems.

Remote Device Management (RDM) is a protocol that sits on top of the DMX512 data standard for lighting, allowing the DMX systems of the fixtures to be modified and monitored remotely. This protocol is ideal for instances in which a unit is installed in a location that is not easily accessible.

With RDM, the DMX512 system becomes bi-directional, allowing a compatible RDM enabled controller to send out a signal to devices on the wire, as well as allowing the fixture to respond (known as a *GET* command). The controller can then use its *SET* command to modify settings that would typically have to be changed or viewed directly via the unit's display screen, including the DMX Address, DMX Channel Mode, and Temperature Sensors.

FIXTURE RDM INFORMATION:

RDM Code	Device ID	Device Model ID	Personality ID
0x1900	44 0000-FFFF	44	Basic 24Ch (001) Standard 27Ch (002) Extended 32Ch (003)

Please be aware that not all RDM devices support all RDM features, and therefore it is important to check beforehand to ensure that the equipment that you are considering includes all of the features that you require.

[0x0011] Proxied Device Count	[0x0405] Device Power Cycles
[0x0200] Sensor Definition	[0x0600] Pan Invert
[0x0201] Sensor Value	[0x0601] Tilt Invert
[0x0080] Device Model Description	[0x0602] Pan Tilt Swap
[0x0081] Manufacturer Label	[0x0500] Display Invert
[0x0082] Device Label	[0x0501] Display Level
[0x00E0] DMX Personality	[0x0603] Realtime Clock
[0x00E1] DMX Personality Description	[0x1010] Power State
[0x0400] Device Hours	[0x1031] Preset Playback
[0x0015] Comms Status	[0x0122] Default Slot Value
[0x0031] Status ID Description	[0x00B0] Language
[0x0032] Clear Status ID	[0x00A0] Language Capabilities
[0x0401] Lamp Hours	[0x00C2] Boot Software Version Label
[0x0402] Lamp Strikes	[0x00C1] Boot Software Version ID
[0x0403] Lamp State	[0x0070] Product Detail ID List
[0x0404] Lamp Mode	[0x0030] Status Messages

CONTROL PANEL

This unit features a display screen with a 6-button control pad, which can be used to easily adjust any device settings.

Pressing the MODE button will cycle through the various Main Menu options. When the desired Main Menu option is displayed on the screen, press the ENTER button to enter the sub-menu, then use the UP, DOWN, LEFT, and RIGHT buttons to scroll through sub-menu options. In some cases, there will be a second sub-menu that can be navigated in the same way.

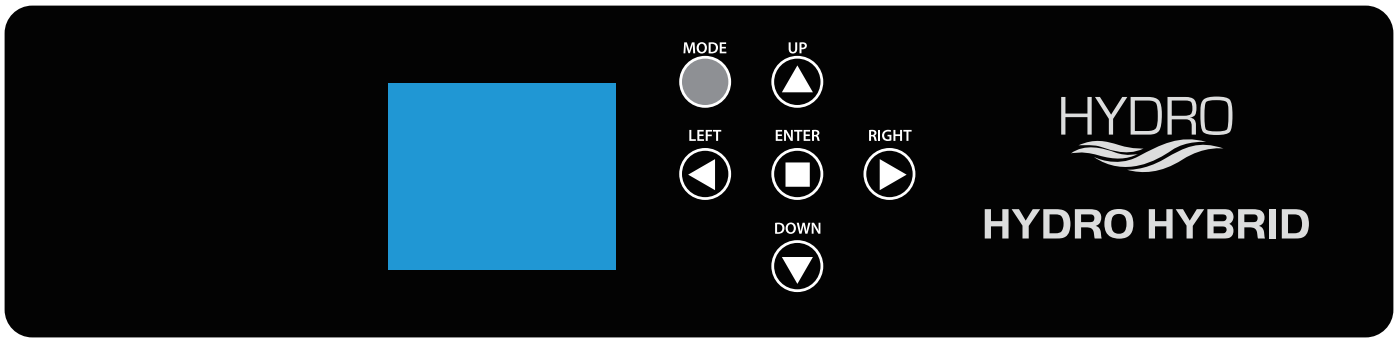

SCREEN LOCK

The control panel screen includes a feature that can be used to lock the control keys after a period of inactivity. This feature can be set or modified in the System Menu by navigating to Personality > Display > Key Lock.

- OFF: Control keys always remained unlocked.
- ON: Control keys lock after a period of inactivity, and can be unlocked by pressing and holding MODE for 3 seconds.
- ON1: Control keys lock after a period of inactivity, and can be unlocked by pressing UP, DOWN, UP, DOWN, ENTER.

SYSTEM MENU

DMX Settings	DMX Address	***001*** - xxx		Set DMX address
	DMX Channel Mode	Basic 24		Select DMX channel mode
		Standard 27		
		Extended 32		
		User Mode		
	No DMX Status	***Hold Last***		Unit holds the last settings received when DMX signal is lost
		Blackout		Unit takes all channels to 0 when DMX signal is lost
		Manual		Unit defaults to manual mode when DMX signal is lost
		Internal Programs		Unit defaults to preset internal program when DMX signal is lost
Personality	Prim / Sec Mode	Primary / ***Secondary***		Set unit as a primary or secondary
	Select Signal	***DMX*** or Aria		DMX has priority
		Aria and DMX Out		DMX signal goes out via DMX XLR output
	Aria Settings	Aria Enable	***On*** / Off	Enable or disable Aria
		Set Aria Channel	00 - 14	Select Aria channel
		Mesh	***On*** / Off	Enable or disable DMX mesh network
		RDM	***On*** / Off	Enable or disable RDM
		Bluetooth	On / ***Off***	Enable or disable Bluetooth
	Status Settings	Pan Degree	630 / ***540***	Set pan degree
		Pan Invert	On / ***Off***	Enable or disable pan invert
		Tilt Invert	On / ***Off***	Enable or disable tilt invert
		P/T Feedback	***On*** / Off	Enable or disable pan/tilt feedback
		P/T Speed	***Speed 1***	Set pan/tilt speed
			Speed 2	
			Speed 3	
		Hibernation	Off, 01min - 99 min (default = ***15min***)	Unit goes into hibernation mode after set period of inactivity

SYSTEM MENU

Personality (continued)	Reset Motors	Reset All Motors	Yes / ***No***	Reset selected set of motors
		Pan / Tilt Reset	Yes / ***No***	
		CMY Reset	Yes / ***No***	
		Color Reset	Yes / ***No***	
		Gobo Reset	Yes / ***No***	
		...	...	
		Effect Reset	Yes / ***No***	
	Display	Intensity	1 - ***10***	Adjust display intensity
		Display Invert	Yes / ***No***	Invert display orientation
		Screen Saver Delay	Off - 10min, default = ***5min***	Screen goes into standby after selected period of inactivity
		Display Flash	***On*** / Off	Enable or disable display screen flash function
		Key Lock	Off	Keys always remain unlocked
			On	Keys lock after certain period of inactivity; press and hold MODE to unlock
			On1	Keys lock after certain period of inactivity; press UP, DOWN, UP, DOWN, ENTER to unlock
	Zoom Speed	Standard / ***Fast***		Set zoom speed
	Set User Mode	Pan	**1**	User can set user mode. All channels are assigned as in Extended mode by default
		Pan Fine	**2**	
		Tilt	**3**	
		Tilt Fine	**4**	
		Cyan	**5**	
		Cyan Fine	**6**	
		Magenta	**7**	
		...	...	
		P/T Speed	**32**	
		Special	**33**	

SYSTEM MENU

Personality (continued)	Service	Passcode = 050	Effect Adjust (Calibration)	Pan 000 - 255	Calibrate fixture effects
				Tilt 000 - 255	
				Cyan 000 - 255	
				Magenta 000 - 255	
				Yellow 000 - 255	
				Color 000 - 255	
				...	
			Update Software	Yes / ***No***	Update fixture software
			Factory Restore (Passcode = 011)	Off / On	Reset fixture to factory default settings
Manual Control	Test				Test manual control
	Pan	000 - 255			Manually set each individual parameter
	Pan Fine	000 - 255			
	Tilt	000 - 255			
	Tilt Fine	000 - 255			
	...	...			
	Pan/Tilt Speed	000 - 255			
Lamp Control	Lamp On / Off	On / ***Off***			Manually switch lamp on or off
	Lamp On with Power	On / ***Off***			Lamp switches on when fixture powers up
	Lamp On via DMX	***On*** / Off			Allows lamp to be switched on via DMX
	Lamp Off via DMX	***On*** / Off			Allows lamp to be switched off via DMX
Internal Programs	Program 1	Speed	000 - 255		Select and configure internal programs
		Fade	000 - 255		
	Program 2	Speed	000 - 255		
		Fade	000 - 255		
	...	...	...		
	Program 7	Speed	000 - 255		
		Fade	000 - 255		

SYSTEM MENU

Information	Fixture Life Time	P-On Time-R	xxxxxx Hours		Total lifetime hours fixture has been powered on
		P-On Time-Reset	xxxxxx Hours		Hours fixture has been powered on since last reset
		Power On Time Reset	Passcode = 050		Reset P-On Time-Reset count
	Total Lamp Time	Lamp On Time	xxxxxx Hours		Total lifetime hours lamp has been powered on
		Lamp On Time-R	xxxxxx Hours		Hours lamp has been powered on since last reset
		Lamp Hours Reset	Passcode = 050		Reset Lamp On Time-R; **should be reset when lamp is replaced**
	Fixture Temps	Lamp Temp	Current	xxx F / xxx C	Current lamp temperature
			Max Resettable	xxx F / xxx C	Max lamp temperature recorded since last reset
			Max Not Resettable	xxx F / xxx C	Max lifetime lamp temperature recorded
		Head Temp	Current	xxx F / xxx C	Current head temperature
			Max Resettable	xxx F / xxx C	Max head temperature recorded since last reset
			Max Not Resettable	xxx F / xxx C	Max lifetime head temperature recorded
		Power Temp	Current	xxx F / xxx C	Current power module temperature
			Max Resettable	xxx F / xxx C	Max power module temperature recorded since last reset
			Max Not Resettable	xxx F / xxx C	Max lifetime power module temperature recorded
		Ballast Temp	Current	xxx F / xxx C	Current ballast temperature
			Max Resettable	xxx F / xxx C	Max ballast temperature recorded since last reset
			Max Not Resettable	xxx F / xxx C	Max lifetime ballast temperature recorded
		Base	Current	xxx F / xxx C	Current ballast temperature
			Max Resettable	xxx F / xxx C	Max base temperature recorded since last reset
			Max Not Resettable	xxx F / xxx C	Max lifetime base temperature recorded

SYSTEM MENU

Information (continued)	Fixture Temps (continued)	Reset Lamp Temp	Passcode = 050	Reset Lamp Max Resettable temperature
		Reset Head Temp	Passcode = 050	Reset Head Max Resettable temperature
		Reset Power Temp	Passcode = 050	Reset Power Module Max Resettable temperature
		Reset Ballast Temp	Passcode = 050	Reset Ballast Max Resettable temperature
		Reset Base Temp	Passcode = 050	Reset Base Max Resettable temperature
	Fixture Humidity	Head 1 xxx%		Displays current humidity levels
		Head 2 xxx%		
		Base xxx%		
	Fan Info (RPM)	Base Fan	xxx	Displays current fan speed
		Lamp Fan	xxx	
		Head Fan 1	xxx	
		Head Fan 2	xxx	
		Head Fan 3	xxx	
	DMX Values	Pan		Display current DMX value for each parameter
		Tilt		
		...		
	Error Logs	Fixture Errors		List errors one by one
		Reset Error Log	Passcode = 050	Clear error log
	Software Version	1U:xxx		Display current software version for each PCB
		2U:xxx		
		3U:xxx		

DMX SET UP

DMX-512: DMX is short for Digital Multiplex. This is a universal protocol used as a form of communication between intelligent fixtures and controllers. A DMX controller sends DMX data instructions from the controller to the fixture. DMX data is sent as serial data that travels from fixture to fixture via the DATA “IN” and DATA “OUT” XLR terminals located on all DMX fixtures (most controllers only have a DATA “OUT” terminal).

DMX Linking: DMX is a language allowing all makes and models of different manufacturers to be linked together and operate from a single controller, as long as all fixtures and the controller are DMX compliant. To ensure proper DMX data transmission, try to use the shortest cable path possible when linking several DMX fixtures. The order in which fixtures are connected in a DMX line does not influence the DMX addressing. For example, a fixture assigned a DMX address of 1 may be placed anywhere in a DMX line: at the beginning, at the end, or anywhere in the middle. When a fixture is assigned a DMX address of 1, the DMX controller knows to send DATA assigned to address 1 to that unit, no matter where it is located in the DMX chain.

Data Cable (DMX Cable) Requirements (For DMX Operation): This unit can be controlled via DMX-512 protocol. The DMX address is set on the rear panel of the unit. Your unit and your DMX controller require a standard 5-pin XLR connector for data input and data output. We recommend Accu-Cable DMX cables. If you are making your own cables, be sure to use standard 110-120 Ohm shielded cable (This cable may be purchased at almost all pro lighting stores). Your cables should be made with a male XLR connector at one end and a female XLR connector at the other. Also remember that DMX cable must be daisy chained and cannot be split.

Notice: Be sure to follow fthe illustration below when making your own cables. Do not use the ground lug on the XLR connector. Do not connect the cable’s shield conductor to the ground lug or allow the shield conductor to come in contact with the XLR’s outer casing. Grounding the shield could cause a short circuit and erratic behavior.

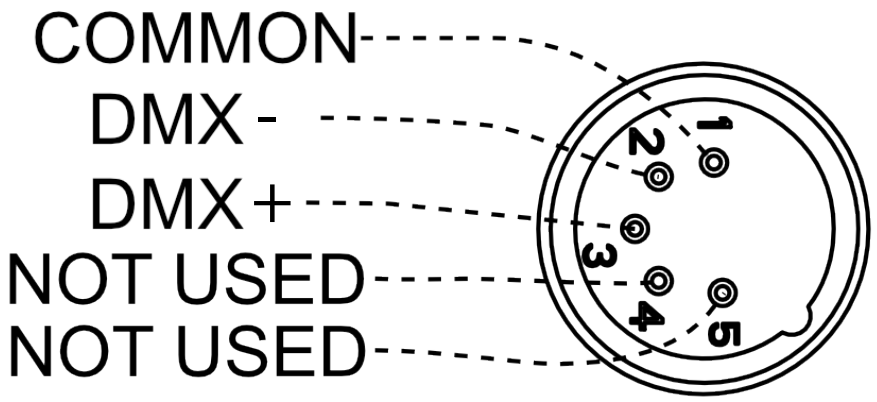

DMX SET UP

Special Note: Line Termination. When longer runs of cable are used, you may need to use a terminator on the last unit to avoid erratic behavior. A terminator is a 110-120 ohm 1/4 watt resistor which is connected between pins 2 and 3 of a male XLR connector (DATA + and DATA -). This unit is inserted in the female XLR connector of the last unit in your daisy chain to terminate the line. Using a cable terminator (ADJ part number Z-DMX/T) will reduce the risk of erratic behavior.

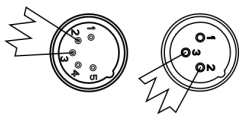

A DMX512 terminator reduces signal errors, avoiding most signal reflection interference. Connect PIN 2 (DMX-) and PIN 3 (DMX+) of the last fixture in series with a 120 Ohm, 1/4 W Resistor to terminate the DMX512.

DMX ADDRESSING.

All fixtures should be given a DMX starting address when using a DMX controller, so the correct fixture responds to the correct control signal. This digital starting address is the channel number from which the fixture starts to “listen” to the digital control signal sent out from the DMX controller. The assignment of this starting DMX address is achieved by setting the correct DMX address on the digital control display on the fixture.

You can set the same starting address for all fixtures or a group of fixtures, or set different addresses for each individual fixture. Setting all fixtures to the same DMX address will cause all fixtures to react in the same way. In other words, changing the settings of one channel will affect all the fixtures simultaneously.

If you set each fixture to a different DMX address, each unit will start to “listen” to the channel number you have set, based on the quantity of DMX channels of each fixture. That means changing the settings of one channel will only affect the selected fixture.

For example, when this unit is operating in 24 channel mode, you should set the starting DMX address of the first unit to 1, the second unit to 25 (1 + 24), the third unit to 49 (1 + 24 + 24), and so on. See the chart below for more details.

CHANNEL MODE	UNIT 1 ADDRESS	UNIT 2 ADDRESS	UNIT 3 ADDRESS	UNIT 4 ADDRESS
24Ch	1	25	49	73
27Ch	1	28	55	82
32Ch	1	33	65	97

DMX TRAITS

CHANNEL			DMX VALUES	FUNCTION
24Ch	27Ch	32Ch		
1	1	1		***Pan***
			000 - 255	Pan Movement (540 / 630)
	2	2		***Pan Fine***
			000 - 255	Pan Fine
2	3	3		***Tilt***
			000 - 255	Tilt Movement (270)
	4	4		***Tilt Fine***
			000 - 255	Tilt Fine
3	5	5		***Cyan***
			000 - 255	0% to 100%
		6		***Cyan Fine***
			000 - 255	0% to 100%
4	6	7		***Magenta***
			000 - 255	0% to 100%
		8		***Magenta Fine***
			000 - 255	0% to 100%
5	7	9		***Yellow***
			000 - 255	0% to 100%
		10		***Yellow Fine***
			000 - 255	0% to 100%
6	8	11		***Color***
			000 - 004	Color (open)
			005 - 009	Red
			010 - 014	Blue
			015 - 019	Green
			020 - 024	Amber
			025 - 029	Orange
			030 - 034	Mint
			035 - 039	Pink
			040 - 044	Lavender
			045 - 049	Fuchsia
			050 - 054	UV
			055 - 059	2700K
			060 - 064	3200K
			065 - 069	4000K
			070 - 074	Open
			075 - 079	Open - Red
			080 - 084	Red
			085 - 089	Red - Blue
			090 - 094	Blue
			095 - 099	Blue - Green

DMX TRAITS

CHANNEL			DMX VALUES	FUNCTION
24Ch	27Ch	32Ch		
6	8	11		***Color (continued)***
			100 - 104	Green
			105 - 109	Green - Amber
			110 - 114	Amber
			115 - 119	Amber - Orange
			120 - 124	Orange
			125 - 129	Orange - Mint
			130 - 134	Mint
			135 - 139	Mint - Pink
			140 - 144	Pink
			145 - 149	Pink - Lavender
			150 - 154	Lavender
			155 - 159	Lavender - Fuchsia
			160 - 164	Fuchsia
			165 - 169	Fuchsia - UV
			170 - 174	UV
			175 - 179	UV - 2700K
			180 - 184	2700K
			185 - 189	2700K - 3200K
			190 - 194	3200K
			195 - 199	3200K - 4000K
			200 - 204	4000K
			205 - 209	4000K - Open
			210 - 212	Open
			213 - 232	Color Wheel Clockwise Rotation, fast to slow
			233 - 235	Color Wheel Stop Rotation
			236 - 255	Color Wheel Counter-Clockwise Rotation, slow to fast
7	9	12		***Color Macros - CMY and Color Wheel***
			000 - 031	Off
			032 - 039	Macro1
			040 - 047	Macro2
			048 - 055	Macro3
			056 - 063	Macro4
			064 - 071	Macro5
			072 - 079	Macro6
			080 - 087	Macro7
			088 - 095	Macro8
			096 - 103	Macro9
			104 - 111	Macro10
			112 - 119	Macro11
			120 - 127	Macro12

DMX TRAITS

CHANNEL			DMX VALUES	FUNCTION
24Ch	27Ch	32Ch		
				Color Macros - CMY and Color Wheel (continued)
			128 - 135	Macro13
			136 - 143	Macro14
			144 - 151	Macro15
			152 - 159	Macro16
			160 - 167	Macro17
			168 - 175	Macro18
			176 - 183	Macro19
7	9	12	184 - 191	Macro20
			192 - 199	Macro21
			200 - 207	Macro22
			208 - 215	Macro23
			216 - 223	Macro24
			224 - 231	Macro25
			232 - 239	Macro26
			240 - 247	Macro27
			248 - 255	Random CMY
				Gobo Wheel 1
			000 - 002	Beam Mode
			003 - 005	Spot Mode
			006 - 015	Gobo 1
			016 - 025	Gobo 2
			026 - 035	Gobo 3
			036 - 045	Gobo 4
			046 - 055	Gobo 5
			056 - 065	Gobo 6
			066 - 075	Gobo 7
8	10	13	076 - 085	Gobo 8
			086 - 095	Gobo 9
			096 - 105	Gobo 1 Shake, slow to fast
			106 - 115	Gobo 2 Shake, slow to fast
			116 - 125	Gobo 3 Shake, slow to fast
			126 - 135	Gobo 4 Shake, slow to fast
			136 - 145	Gobo 5 Shake, slow to fast
			146 - 155	Gobo 6 Shake, slow to fast
			156 - 165	Gobo 7 Shake, slow to fast
			166 - 175	Gobo 8 Shake, slow to fast
			176 - 190	Gobo 9 Shake, slow to fast
			191 - 192	Open

DMX TRAITS

CHANNEL			DMX VALUES	FUNCTION
24Ch	27Ch	32Ch		
8	10	13		***Gobo Wheel 1 (continued)***
			193 - 223	Gobo Wheel Clockwise Rotation, slow to fast
			224	Gobo Wheel Stop Rotation
			225 - 255	Gobo Wheel Counter-Clockwise Rotation, fast to slow
9	11	14		***Gobo 1 Rotation***
			000 - 005	Gobo 1 Rotation Off
			006 - 128	Gobo Position, 0° to 540°
			129 - 191	Gobo Clockwise Rotation, slow to fast
			192	Gobo Stop Rotation
			193 - 255	Gobo Counter-Clockwise Rotation, fast to slow
10	12	15		***Gobo Wheel 2 (Static)***
			000 - 002	Open
			003 - 011	Gobo 1
			012 - 020	Gobo 2
			021 - 029	Gobo 3
			030 - 038	Gobo 4
			039 - 047	Gobo 5
			048 - 056	Gobo 6
			057 - 065	Gobo 7
			066 - 074	Gobo 8
			075 - 083	Gobo 9
			084 - 092	Gobo 10
			093 - 101	Gobo 11
			102 - 110	Gobo 12
			111 - 119	Gobo 13
			120 - 128	Gobo 14
			129 - 131	Open
			132 - 135	Gobo 1 Shake, slow to fast
			136 - 139	Gobo 2 Shake, slow to fast
			140 - 143	Gobo 3 Shake, slow to fast
			144 - 147	Gobo 4 Shake, slow to fast
			148 - 151	Gobo 5 Shake, slow to fast
			152 - 155	Gobo 6 Shake, slow to fast
			156 - 159	Gobo 7 Shake, slow to fast
			160 - 163	Gobo 8 Shake, slow to fast
			164 - 167	Gobo 9 Shake, slow to fast
			168 - 171	Gobo 10 Shake, slow to fast
			172 - 175	Gobo 11 Shake, slow to fast
			176 - 179	Gobo 12 Shake, slow to fast
			180 - 183	Gobo 13 Shake, slow to fast
			184 - 187	Gobo 14 Shake, slow to fast

DMX TRAITS

CHANNEL			DMX VALUES	FUNCTION
24Ch	27Ch	32Ch		
10	12	15		***Gobo Wheel 2 (Static) (continued)***
			188 - 191	Open
			192 - 223	Gobo Wheel Clockwise Rotation, slow to fast
			224	Gobo Wheel Stop Rotation
			225 - 255	Gobo Wheel Counter-Clockwise Rotation, fast to slow
11	13	16		***Shutter***
			000 - 031	Shutter Closed
			032 - 063	Shutter Open
			064 - 095	Slow to Fast Strobe
			096 - 127	No Action, Shutter Open
			128 - 159	Slow to Fast Pulse Effect
			160 - 191	No Action, Shutter Open
			192 - 223	Slow to Fast Random Strobe
			224 - 255	No Action, Shutter Open
12	14	17		***Dimmer***
			000 - 255	Dimmer Intensity, 0% to 100%
	15	18		***Dimmer Fine***
			000 - 255	Dimmer Intensity Fine
13	16	19		***Prism 1***
			000 - 005	No Prism
			005 - 255	Prism On
14	17	20		***Prism 1 Rotation***
			000 - 005	Prism 1 Rotation Off
			006 - 128	Prism 1 Position, 0° to 540°
			129 - 191	Prism 1 Clockwise Rotation, slow to fast
			192	Prism 1 Stop Rotation
			193 - 255	Prism 1 Counter-Clockwise Rotation, fast to slow
15	18	21		***Prism 2***
			000 - 005	No Prism
			006 - 255	Prism On
16	19	22		***Prism 2 Rotation***
			000 - 005	Prism 2 Rotation Off
			006 - 128	Prism 2 Position, 0° to 540°
			129 - 191	Prism 2 Clockwise Rotation, slow to fast
			192	Prism 2 Stop Rotation
			193 - 255	Prism 2 Counter-Clockwise Rotation, fast to slow

DMX TRAITS

CHANNEL			DMX VALUES	FUNCTION
24Ch	27Ch	32Ch		
17	20	23		***Prism / Gobo Macros***
			000 - 014	No Prism - Open
			015 - 029	Macro 1
			030 - 044	Macro 2
			045 - 059	Macro 3
			060 - 074	Macro 4
			075 - 089	Macro 5
			090 - 104	Macro 6
			105 - 119	Macro 7
			120 - 134	Macro 8
			135 - 149	Macro 9
			150 - 164	Macro 10
			165 - 179	Macro 11
			180 - 194	Macro 12
			195 - 209	Macro 13
			210 - 224	Macro 14
			225 - 239	Macro 15
			240 - 255	Macro 16
18	21	24		***Focus***
			000 - 255	0% to 100%
		25		***Focus Fine***
			000 - 255	0% to 100%
19	22	26		***Zoom***
			000 - 255	Narrow to Wide
		27		***Zoom Fine***
			000 - 255	16-bit Narrow to Wide
20	23	28		***Frost***
			000 - 255	0% to 100%
21	24	29		***Animation Index / Rotation***
			000 - 005	Open
			006 - 128	Animation Indexing
			129 - 189	Clockwise Animation Rotation, fast to slow
			190 - 193	No Rotation
			194 - 255	Counter-Clockwise Animation Rotation, slow to fast
22	25	30		***CMY / Color Macro Speed***
			000 - 255	Maximum to Minimum
23	26	31		***Pan / Tilt Speed***
			000 - 225	Pan / Tilt Speed, fast to slow
			226 - 235	Blackout by Movement
			236 - 245	Blackout by All Wheels Changing
			246 - 255	No Function

DMX TRAITS

CHANNEL			DMX VALUES	FUNCTION
24Ch	27Ch	32Ch		
24	27	32		***Special Functions***
			000 - 089	No Function
			090 - 099	Aria On (Default, Hold 3s)
			100 - 109	Aria Off (Hold 5s)
			110 - 119	Lamp On (Hold 3s)
			120 - 129	Lamp Off (Hold 5s)
			130 - 139	Invert Pan On (Hold 3s)
			140 - 149	Invert Pan Off (Hold 5s)
			150 - 159	Invert Tilt On (Hold 3s)
			160 - 169	Invert Tilt Off (Hold 5s)
			170 - 179	Display Backlight On (Hold 3s)
			180 - 189	Display Backlight Off (Hold 5s)
			190 - 199	Hibernation Enable (Hold 3s)
			200 - 209	Hibernation Off (Hold 5s)
			210 - 214	Color Reset (Hold 3s)
			215 - 219	Gobo Reset (Hold 3s)
			220 - 224	Focus and Zoom Reset (Hold 3s)
			225 - 229	Shutter Reset (Hold 3s)
			230 - 234	Reset Pan/Tilt (Hold 3s)
			235 - 239	Reset Head Only (Hold 3s)
			240 - 244	Reset Effects (Hold 3s)
			245 - 249	Reset All Function (Hold 3s)
			250 - 255	No Function

COLOR MACROS CHART

MACRO NO.	COLOR WHEEL	CYAN	MAGENTA	YELLOW
Macro1	0	128	128	0
Macro2	0	255	128	0
Macro3	0	128	255	0
Macro4	0	0	128	255
Macro5	0	0	255	128
Macro6	0	128	0	255
Macro7	0	255	0	128
Macro8	0	0	128	128
Macro9	0	128	0	128
Macro10	0	0	255	170
Macro11	0	255	128	128
Macro12	0	128	255	128
Macro13	0	128	128	255
Macro14	0	46	13	206
Macro15	0	0	255	255
Macro16	0	255	0	255
Macro17	0	255	255	0
Macro18	0	133	207	124
Macro19	0	228	170	124
Macro20	0	23	28	157
Macro21	0	94	157	169
Macro22	0	176	203	112
Macro23	0	125	85	60
Macro24	0	205	117	96
Macro25	0	221	119	227
Macro26	0	0	0	255
Macro27	30	0	153	0
Random CMY	Random	Random	Random	Random

PRIMARY-SECONDARY SET UP

This function allows you to link units together to run in a Primary-Secondary set-up, in which one unit will act as the controlling unit and the others will react to the controlling unit's built-in programs. Any unit can be configured to act as a Primary or as a Secondary, but only one unit in a given system can be programmed to act as the Primary.

Primary-Secondary Connections and Settings:

1. Daisy chain your units via the XLR connectors on the rear panels of each unit. Use standard XLR data cables to link your units together. Remember that the male XLR connector is the input and the female XLR connector is the ouput. The first unit in the chain (primary) will use the female XLR connector only. The last unit in the chain will use the male XLR connector only.
2. On the unit that you want to designate as the primary, use the display screen and control panel to navigate to Personality > Prim/Sec Mode, and press the ENTER button to confirm. Use the UP or DOWN button to toggle this setting to "Primary". The device is now configured as the primary unit. Configure the unit's desired programming.
3. On the units that you want to designate as secondaries, use the display screen and control panel to navigate to Personality > Prim/Sec Mode, and press the ENTER button to confirm. Use the UP or DOWN button to toggle this setting to "Secondary". The device is now configured as secondary unit which will follow the behavior of the primary unit.

NOTES:

- Only one unit should be configured as the primary, while all the other units should be configured as secondaries.
- All units should be set to the same DMX channel mode.
- If fixtures fail to sync, verify that all settings mentioned above are the same, then power all devices off, then switch them on again to re-establish the link.

MULTI UNIT POWER LINKING

This features allows you to connect the fixtures to one another using the power cable input and output sockets.

The maximum number of units that can be linked in this manner is as follows:

- **2 units when running on 120V power.**
- **4 units when running on 230V power.**

DO NOT EXCEED THIS MAXIMUM NUMBER WHEN POWER LINKING UNITS!

All linked units must be of the same make and model type. Do not mix and match units!

MAINTENANCE GUIDELINES



DISCONNECT POWER BEFORE PERFORMING ANY MAINTENANCE!

CLEANING

Frequent cleaning is recommended to ensure proper function, optimized light output, and an extended life. The frequency of cleaning depends on the environment in which the fixture operates: damp, smoky, or particularly dirty environments can cause greater accumulation of dirt on the fixture's optics. Clean the external lens surface regularly with a soft cloth to avoid dirt/debris accumulation.

NEVER use alcohol, solvents, or ammonia-based cleaners.

MAINTENANCE

Regular inspections are recommended to ensure proper function and extended life. There are no user serviceable parts inside this fixture. Please refer all other service issues to an authorized ADJ service technician. Should you need any spare parts, please order genuine parts from your local ADJ dealer.

Please refer to the following points during routine inspections:

A. A detailed electrical check by an approved electrical engineer every three months, to make sure the circuit contacts are in good condition and prevent overheating.
B. Be sure all screws and fasteners are securely tightened at all times. Loose screws may fall out during normal operation, resulting in damage or injury as larger parts could fall.
C. Check for any deformations on the housing, color lenses, rigging hardware, and rigging points (ceiling, suspension, trussing). Deformations in the housing could allow for dust to enter into the fixture. Damaged rigging points or unsecured rigging could cause the fixture to fall and seriously injure a person(s).
D. Electric power supply cables must not show any damage, material fatigue, or sediments.

NEVER remove the ground prong from the power cable.

TORQUE SETTINGS FOR SCREWS

IN ORDER TO MAINTAIN THE IP65 RATING ON THE LIGHTING FIXTURES, ALL SCREWS MUST BE TIGHTENED TO THE FOLLOWING TORQUE SPECIFICATION USING A TORQUE DRIVER.

Refer to the table and diagram below for torque specifications.

TORQUE DRIVERS (Recommended): UTICA TS-30 (shown)
ALTERNATE DRIVERS:

- Proto J6107A
- Wiha 28887



CAUTION! DO NOT OVER TORQUE SCREWS, AS THIS CAN CAUSE LEAKAGE ISSUES!

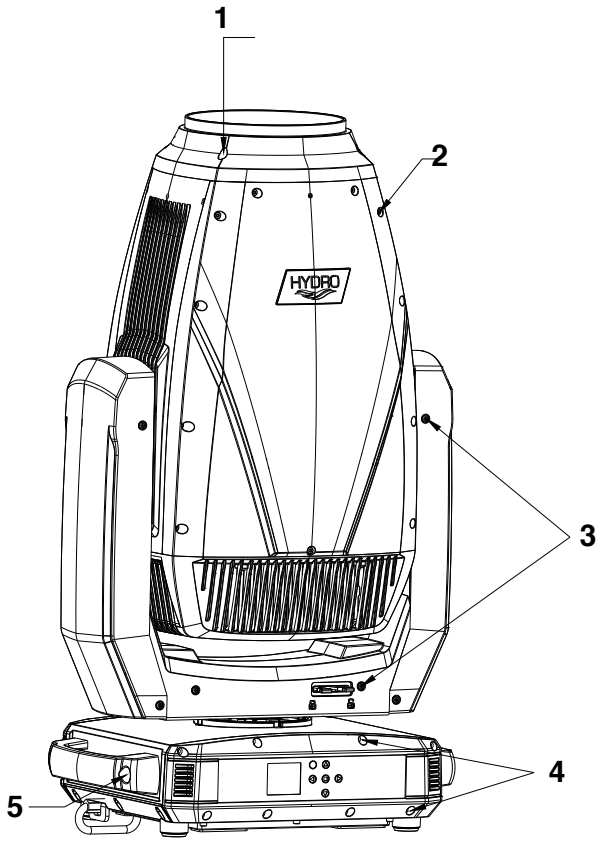

NO.	LOCATION	QUANTITY	TORQUE
1	Lens Cover	4	4.3 ± 0.4 Lb-in (5.0 ± 0.5 Kg-cm)
2	Head Cover x2	11 per cover	11.3 ± 0.4 Lb-in (13.0 ± 0.5 Kg-cm
3	Arm Cover x2	8 per cover	4.3 ± 0.4 Lb-in (5.0 ± 0.5 Kg-cm)
4	Base Cover x2	8 per cover	11.3 ± 0.4 Lb-in (13.0 ± 0.5 Kg-cm
5	Handle x2	2 per handle	11.3 ± 0.4 Lb-in (13.0 ± 0.5 Kg-cm

IP TEST PARAMETERS

Following any repair or maintenance procedure that requires disassembly of the fixture, use ADJ's Hydro IP Tester to confirm the IP integrity of the fixture. The air valve is located on the back panel next to the display screen, as shown in the diagram below. Please contact ADJ Service for information regarding the ADJ Hydro IP Tester, or visit the product information page online at: https://www.adj.com/hydro-ip-tester

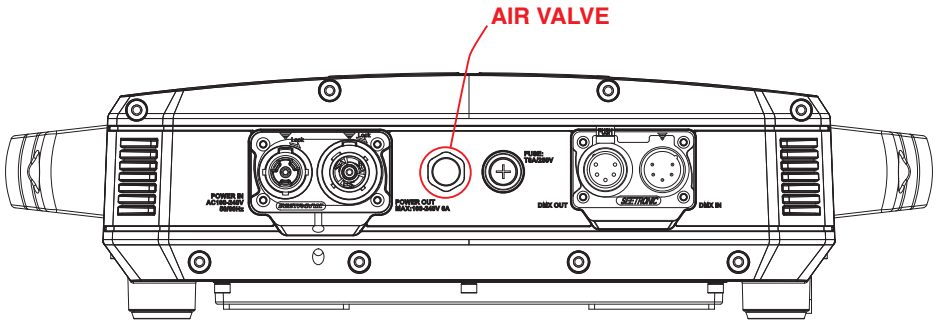

CAUTION! THE USE OF PROTECTIVE GLOVES AND SAFETY GOGGLES IS STRONGLY RECOMMENDED WHILE PERFORMING THE IP PRESSURE TEST! AVOID PLACING YOUR FACE, EYES, HANDS, ETC IN CLOSE PROXIMITY TO THE FIXTURE'S LENS WHILE PERFORMING THE TEST!

DE-HUMIDIFICATION: IP65 fixtures operating in high-humidity environments may experience residual fogging or condensation. Such fogging will not damage the fixture, and can be removed using the following procedure: position the unit with the air valve pointing upwards, then open the air valve and run the unit for 1-2 hours after reaching operating temperature. Then, while the fixture is still hot, re-install the air valve and allow the unit to cool down. Please note that this procedure should be performed in a dry, air-conditioned environment. Avoid additional fogging by drying the fixture completely before placing into a road case.



IP PRESSURE TESTING PARAMETERS					
Low Pressure Limit	**High Pressure Limit**	**Inflation Time**	**Equilibrium Time**	**Detection Time**	**Acceptable Leakage**
2.901 psi (20.0 KPa)	3.336 psi (23.0 KPa)	15 sec	15 sec	15 sec	0.015 psi (0.1 KPa) (100 Pa)

ERROR CODES

Code	Description
BaseTemp	Base temperature error
HeadTemp	Head temperature error
BalTemp	Ballast temperature error
BaseFan1	Base fan 1 error
BaseFan2	Base fan 2 error
BaseFan3	Base fan 3 error
BaseFan4	Base fan 4 error
LampFan1	Lamp fan 1 error
LampFan2	Lamp fan 2 error
GoboFan	Gobo fan error
CMYFan	CMY fan error
CoolFan1	Cooling fan 1 error
CoolFan2	Cooling fan 2 error
CoolFan3	Cooling fan 3 error
CoolFan4	Cooling fan 4 error
CoolFan5	Cooling fan 5 error
HeadFan1	Head fan 1 error
HeadFan2	Head fan 2 error
MotorFan	Motor fan error
Pan	Pan motor error
Tilt	Tilt motor error
Cyan	Cyan flag error
Magenta	Magenta flag error
Yellow	Yellow flag error
ColorWheel	Color wheel error
RotGobo	Rotating gobo wheel error
FixedGobo	Fixed gobo wheel error
Animation	Animation wheel error
Zoom	Zoom motor error
Focus	Focus motor error
Prism1	Prism 1 error
Prism1Rot	Prism 1 rotation error
Prism2	Prism 2 error
Prism2Rot	Prism 2 rotation error

DIMENSIONAL DRAWINGS

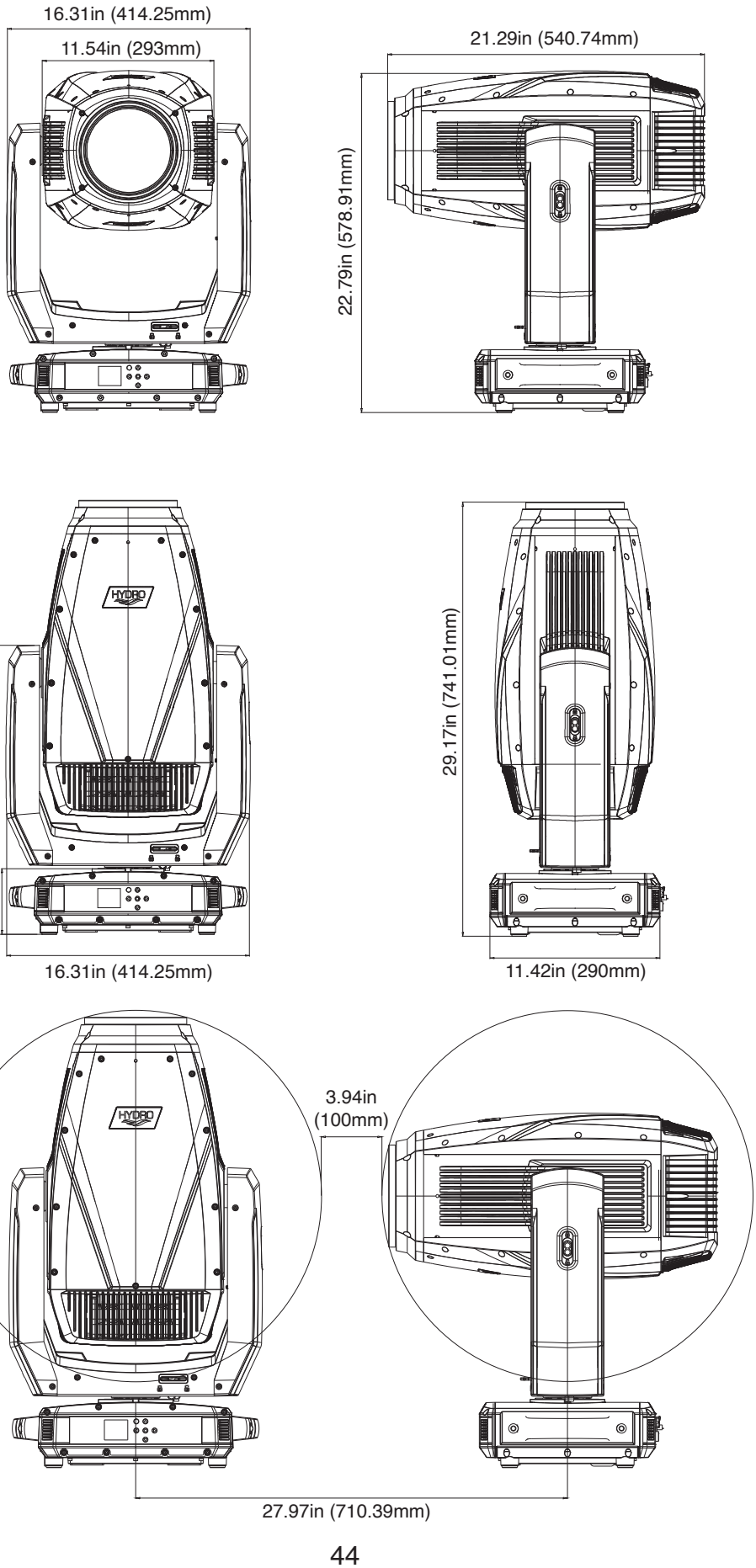

SPECIFICATIONS

SOURCE:
- Osram SIRIUS HRI 420W Dishcharge Lamp
- Full Power (420W)
- Up to 2,500 Hour Lamp Life*
- *Test lab conditions. May vary depending on several factors including but not limited to:Environmental Conditions, Power/Voltage, Usage Patterns (On-Off Cycling),Control, and Dimming.

PHOTOMETRIC DATA:
- Lumens: Beam Mode:12,319, Spot Mode:14,416
- Lux: Beam Mode:562,600, Spot Mode:223,200 (@5m, zoomed out)
- CRI: 77 +/- 5
- Correlate color temperature: 6500K +/- 300K
- Zoom Range: Beam Mode: 1.6°-17.7° / Spot Mode: 3.1°-39.2°

EFFECTS
- Beam, Spot and Wash
- Motorized Zoom
- Frost Filter (Heavy)
- Animation Wheel
- 2 Prisms on Dual Planes, 8 facet circular / 6 facet linear
- CMY/Color Macros
- Gobo/Prism Macros
- Motorized Focus
- High Speed Shutter and Strobe
- Pan Degree: 540°/630°
- Tilt Degree: 270°

COLOR:
- Full CMY Color Mixing System
- White Color Temp Presets
- 12 Position Color Wheel (Including: UV + CTO: 2700K, 3200K, 4000K)
- 27 Color Macros (Color Wheel + CMY)

GOBOS:
- 2 Gobo Wheels
- GOBO Wheel 1: 9 Interchangeable-Rotating / Indexing Glass Black & White Gobos
- GOBO Wheel 2: 14 Static-Stamped Metal Gobos (Including 4 beam reducers)

CONTROL / PHYSICAL:
- DMX and RDM Protocols
- 3 DMX Channel Modes (24, 28 & 32)
- 1 User Assignable DMX Channel Mode
- Aria X2 Wireless Management / DMX System
- (4) Button Touch Panel
- Full Color 180° Reversible LCD Menu Display
- Outdoor, IP66 5pin DMX In/Out
- Outdoor, IP66 Locking Power In/Out
- Pan/Tilt Locks

SIZE / WEIGHT:
- Length: 11.4” (290mm)
- Width: 16.31” (414.27mm)
- Height: 29.17” (741mm)
- Weight: 69.7 lbs. (31.6 kg)

ELECTRICAL / THERMAL:
- AC 100-240V 50/60Hz
- 580W Max Power Consumption
- -4° to 113°F (-20°C to 45°C)
- Min/Max Ambient Temperature: -20ºC ~ 45ºC

APPROVALS / RATINGS:
- CE
- cETLus (Pending)
- IP65IP20

CE IP65

Please Note: Specifications and improvements in the design of this unit and this manual are subject to change without any prior written notice.

FCC STATEMENT

This device complies with Part 15 of the FCC Rules. Operation is subject to the following two conditions: (1) this device may not cause harmful interference, and (2) this device must accept any interference received, including interference that may cause undesired operation.

FCC RADIO FREQUENCY INTERFERENCE WARNINGS & INSTRUCTIONS

This product has been tested and found to comply with the limits as per Part 15 of the FCC Rules. These limits are designed to provide reasonable protection against harmful interference in a residential installation. This device uses and can radiate radio frequency energy and, if not installed and used in accordance with the included instructions, may cause harmful interference to radio communications. However, there is no guarantee that interference will not occur in a particular installation. If this device does cause harmful interference to radio or television reception, which can be deter- mined by turning the device off and on, the user is encouraged to try to correct the interference by one or more of the following methods:

- Reorient or relocate the device.
- Increase the separation between the device and the receiver.
- Connect the device and the radio receiver to electrical outlets on two different electrical circuits.
- Consult the dealer or an experienced radio/TV technician for help.

Energy Saving Matters (EuP 2009/125/EC)

Saving electric energy is a key to help protecting the environment. Please turn off all electrical products when they are not in use. To avoid power consumption in idle mode, disconnect all electrical equipment from power when not in use. Thank you!

This page intentionally left blank.