MOUNT-IT!

English

Installation Instruction

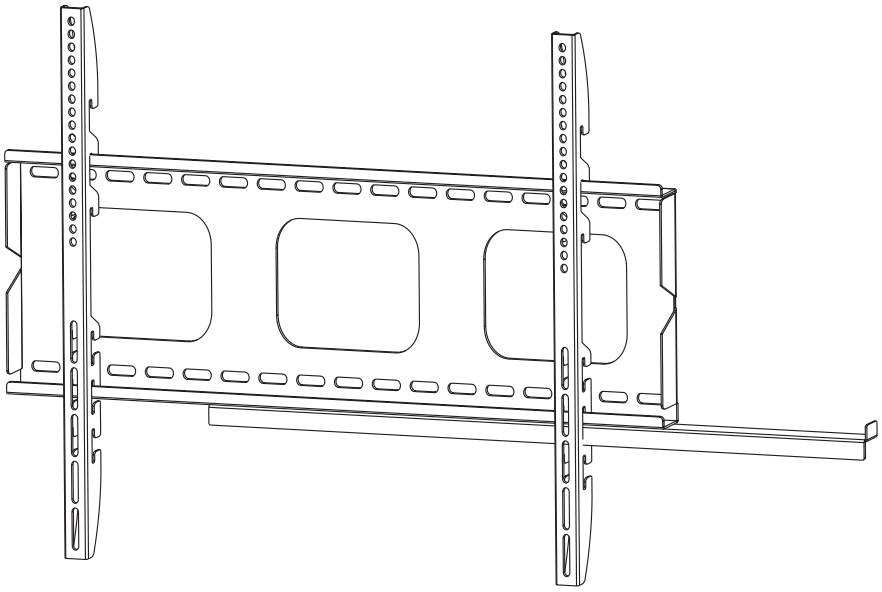

UNPACKING INSTRUCTIONS

- Carefully open the carton, remove contents and lay out on cardboard or other protective surface to avoid damage.
- Check package contents against the Supplied Parts List in the next page to assure that all components were received undamaged. Do not use damaged or defective parts.
- Carefully read all instructions before attempting installation.

IMPORTANT SAFETY INFORMATION

Install and operate this device with care. Please read this instruction before beginning the installation, and carefully follow all instructions contained herein. Use proper safety equipment during installation.

Please call a qualified installation contractor for help if you:

- If you don't understand these directions or have any doubts about the safety of the installation.
- If you are uncertain about the nature of your wall, consult a qualified installation contractor.

Do not use this product for any purpose or in any configuration not explicitly specified in this instruction. We hereby disclaim any and all liability for injury or damage arising from incorrect assembly, incorrect mounting, or incorrect use of this product.

WARNING	**CAUTION!** **This TV mount must be securely attached to the vertical wall. If the mount is not properly installed it may fall, resulting in possible injury and/or damage.**

Tools Required	■ **5/32"(4mm) Drill Bit** ■ **Phillips Screwdriver**	■ **3/8"(10mm) Masonry Bit** ■ **Stud Finder**	■ **Wrench or Socket Set** ■ **Carpenter's Level**

Note: The mounting components and hardware supplied in this package are not designed for installations to walls with steel studs or to cinder block walls. If the hardware you need for your installation is not included, please consult your local hardware store for proper mounting hardware for the application.

Supplied Parts List

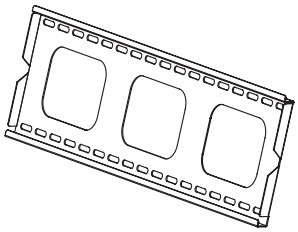

(1)Wall Plate

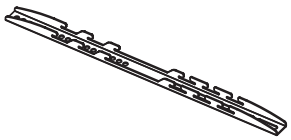

(1)Left Monitor Bracket

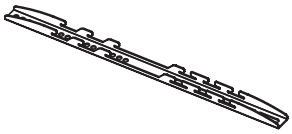

(1)Right Monitor Bracket

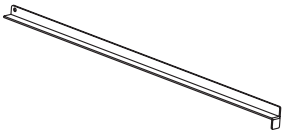

(1)Locking Bar

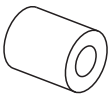

(4)M4 Spacer-A



(8)5mm M6/M8 Spacer-B

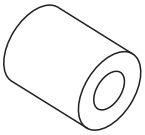

(4)20mm M6/M8 Spacer-C

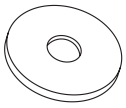

(4)M4 Washer-D

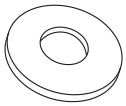

(4)M6 Washer-E

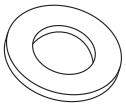

(4)M8 Washer-F



(4)M4x12 Bolt-G



(4)M4x30 Bolt-H

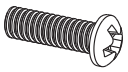

(4)M6x20 Bolt-J



(4)M6x35 Bolt-K

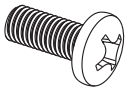

(4)M8x20 Bolt-L

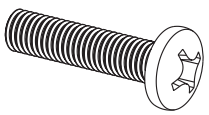

(4)M8x35 Bolt-M

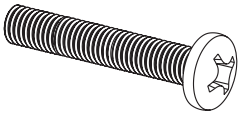

(4)M8x45 Bolt-N

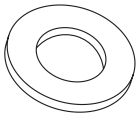

(6)Lag Bolt Washer-X

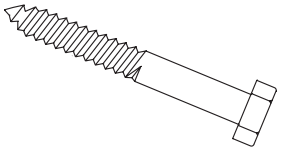

(6)M7x65mm Lag Bolt-Y

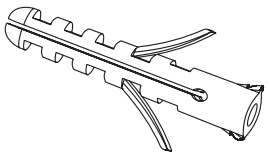

(6)M10x55mm Concrete Anchor-Z

Step 1 Mounting the Wall Plate to the Wall

Brick or Concrete Wall

1.1

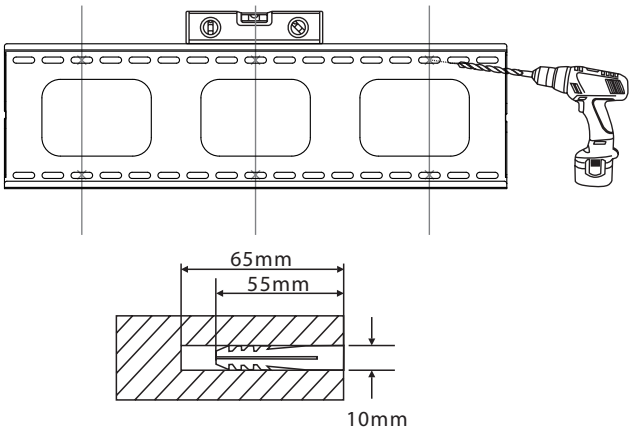

1.2

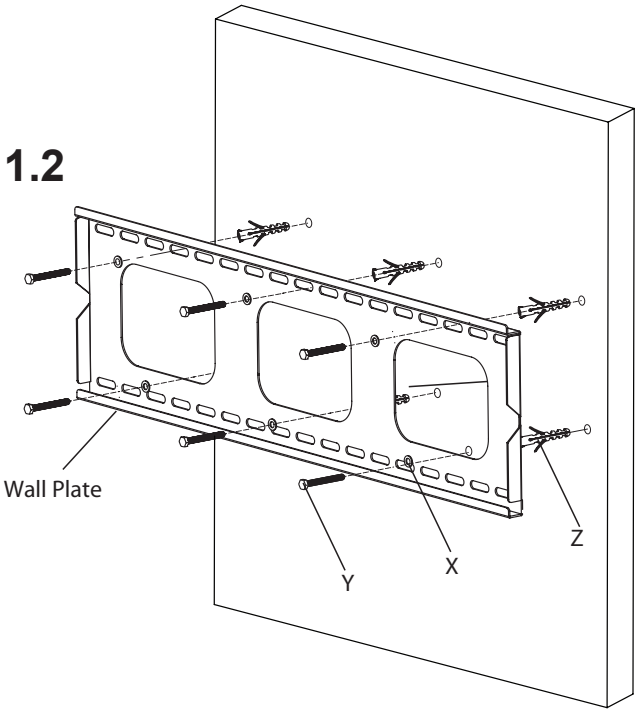

Wood Studs Wall

1.1

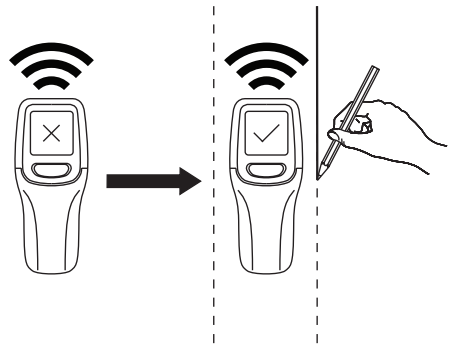

1.2

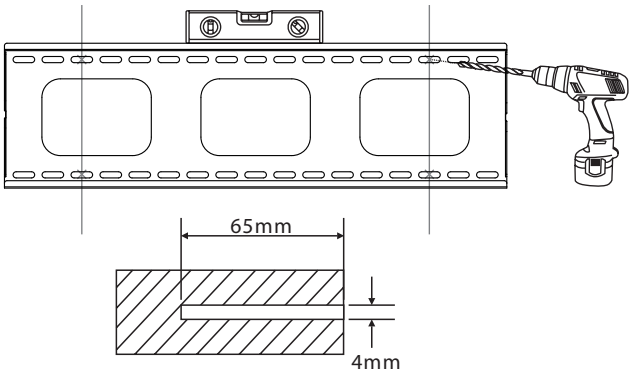

1.3

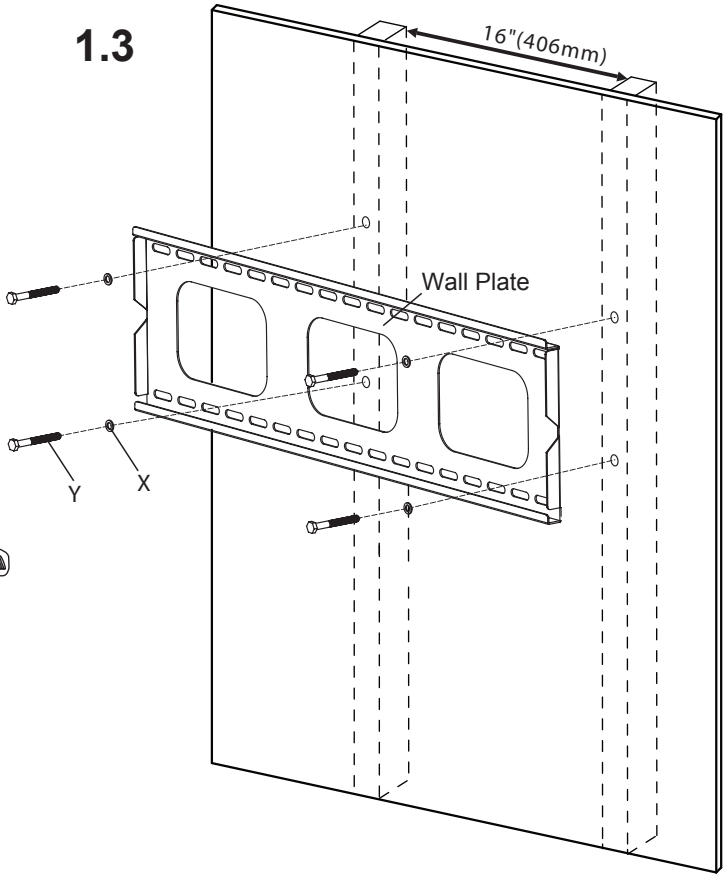

Step 2 Mounting the Monitor Brackets to a TV

2.1 G/H/J/K/L/M/N

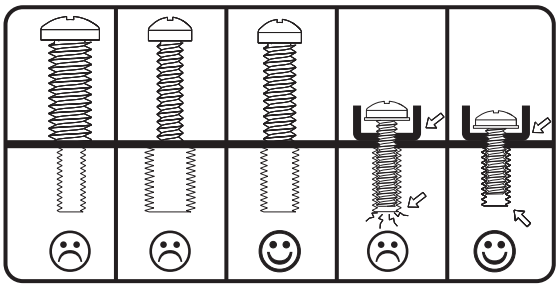

2.2 A/B/C (Optional)

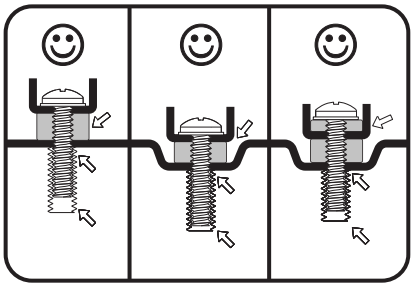

2.3

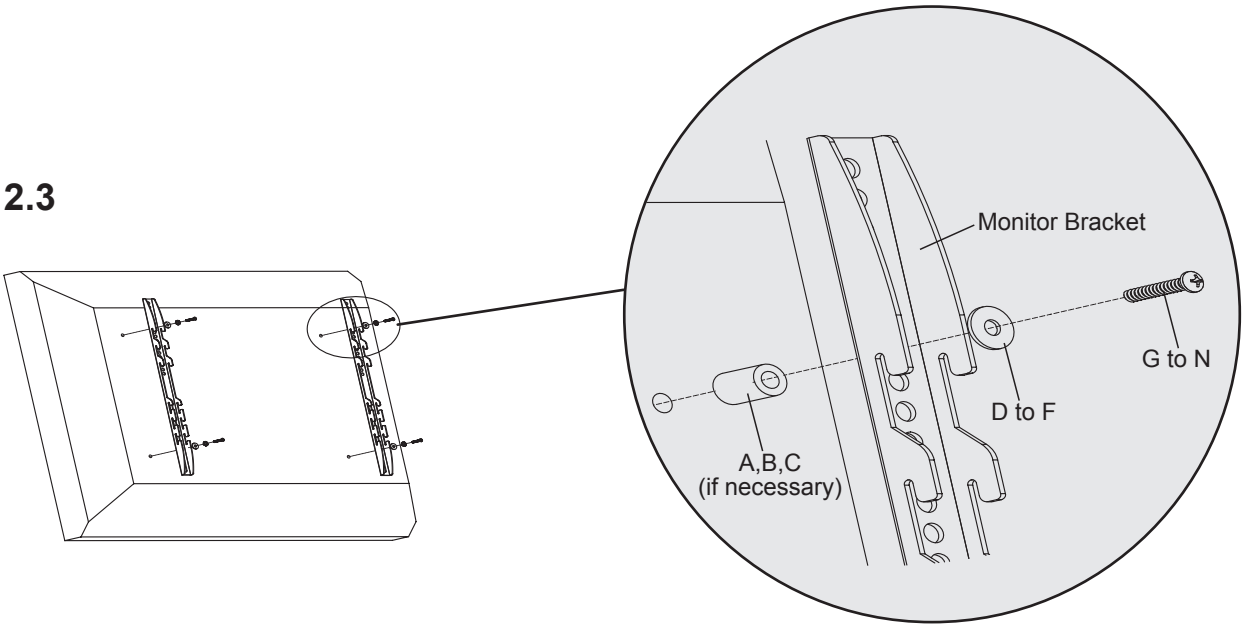

Step 3 Attaching TV to Wall Plate and Inserting the Locking Bar

3.1

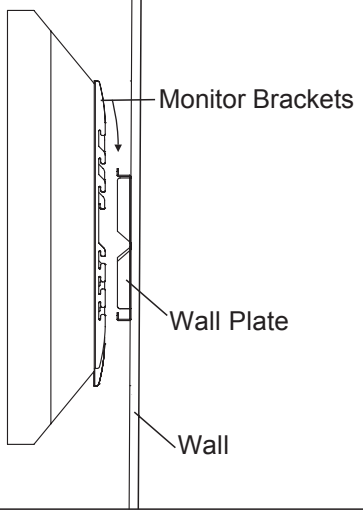

3.2

