Thypoch

SEEING INTO ETERNITY

EUREKA MIRRORLESS PRIME LENS USER'S MANUAL

A Gateway To Authenticity.

Art, a temporal echo, mirrors epochs past and those yet to flow. With imagery as its vessel, it carries the intangible essence of time, crystallizing specific slices of memory from bygone scenes and experiences.

Thypoch Eureka awakens the imagination of the golden era with classical grace, sculpting the elements of light and shadow, capturing all the sparkling fragments through the changing seasons.

Contents

P1
Introduction

P1
Safety Notes

P2
Lens Parts

P3
Lens Control

P4
Attaching /Removing

1. Attaching and Removing a Lens
2. Attaching and Removing the UV Filter/Lens Hood

P8
Depth of Field Scale Reading

P9
Rangefinder Focus

P10
Specification

P11
After-sales Service

P13
The Name and Content of Hazardous Substances

Note

Click to Go

Users can read the table of content(TOC) to have an overview of the Eureka Product Manual. Please click on the title or link to jump to the specific page.

Search Keyword

Users can pinpoint the content they are looking for with the search function.

Introduction

Back to Contents

Thank you for purchasing a Thypoch product!

The Eureka Series is Thypoch's homage to the optics of the world of yesterday. Eureka is a throwback into the classics, which manifests itself with the classic collapsible structure, modern sharpness, low contrast and vintage bokeh, all together bringing those classic moments into life.

With the collapsible design, you can take Eureka anywhere at ease by elongating and shortening the lens.

Safety Notes

- Please do not watch the sun or bright light source through the lens, otherwise it will cause visually disabled.
- Never use organic solvents such as paint thinner or benzene to clean the lens.
- Put the front and rear caps on when the lens is not in use.
- To avoid mold, please store your lens and filter in a cool and dry location, and get away with direct sunlight as well as naphtha or mothballs.
- Please keep the lens dry and wipe the water droplets off if there are any on the glass surface.
- Leaving the lens near heater or in other extremely hot locations could cause damage or warping.
- Use a blower to remove dust and lint from the glass surfaces of the lens or filter. To remove smudges and fingerprints, apply a small amount of lens cleaner to a soft, clean cotton cloth or lens–cleaning tissue and clean from the center outwards using a circular motion. Do not leave smears or touch the glass with your finger.

Lens Parts

Back to Contents

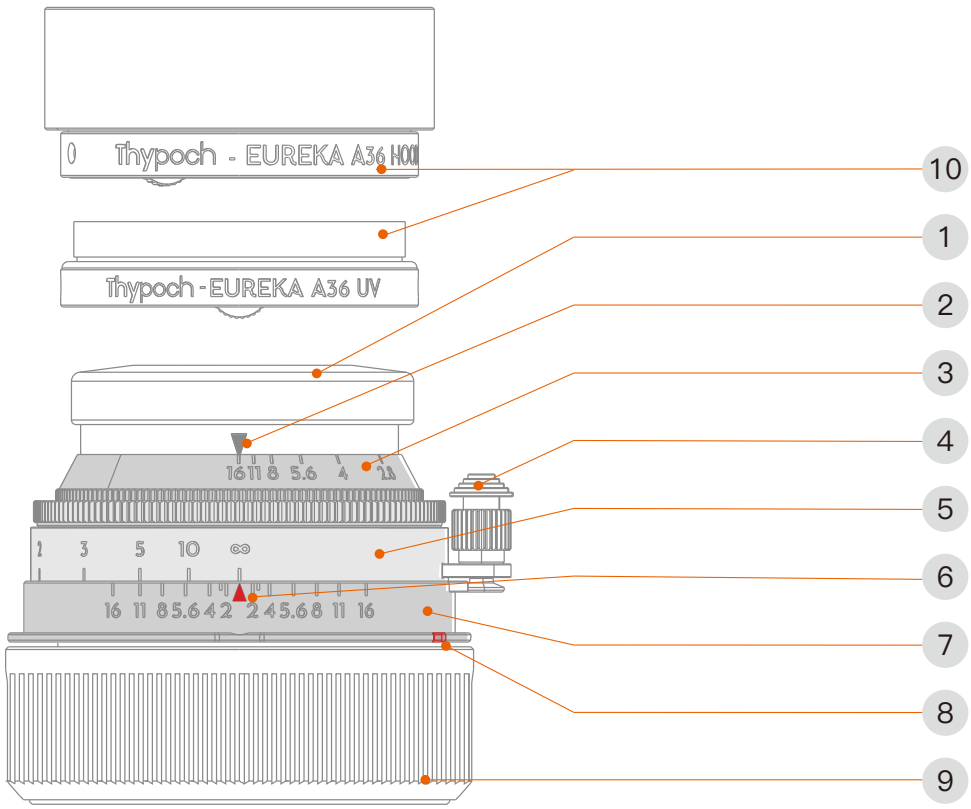

1. 1.Lens Front Cap
2. Aperture Ring Mark
3. Aperture Ring
4. Focus Ring Lock Wrench
5. Focus Ring
6. Focus Ring Mark
7. Depth-of-Field Scale
8. Mount installation identification
9. Lens Rear Cap
10. Lens Hood/ UV Filter

Lens Control

Back to Contents

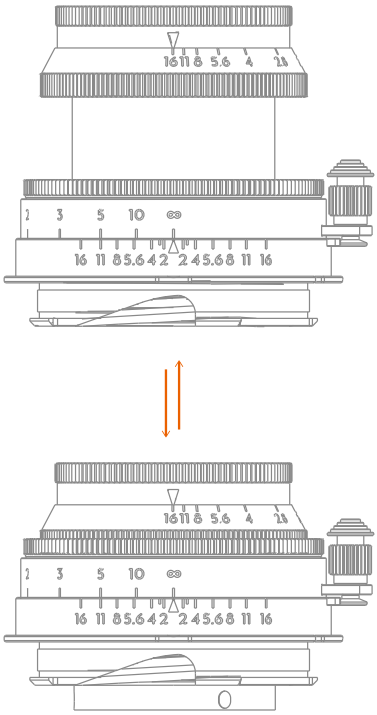

Switching between Use and Storage

In use: To use your lens, please hold the front ring of the lens with your fingers, pull it out, and rotate it clockwise until it stops rotating.

In storage: If you don't use your lens, please hold the front ring of the lens with your fingers, rotate it counterclockwise until it stops rotating, and press it toward the bayonet until it cannot be shortened.

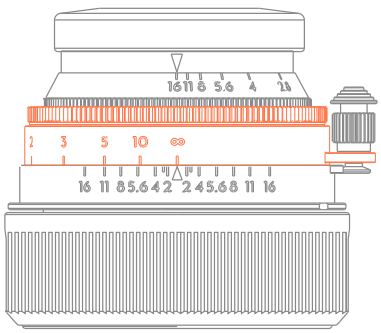

Focus Ring

Focusing Control

When the focus ring is unlocked, rotate the focus ring to increase or decrease the focus distance, thereby adjusting the focus position in the screen.

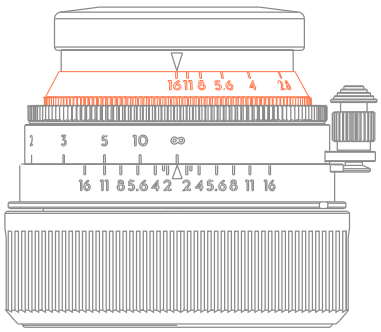

Aperture Ring

Aperture Control

Rotating the aperture ring can enlarge or reduce the diameter of the aperture, adjust the brightness of the image and the background blur effect of the subject.

Note: The focusing control will only take effect after elongating the lens.

1. Attaching and Removing a Lens

Please turn off the camera's power before assembling or disassembling the lens.

Remove the lens rear cap

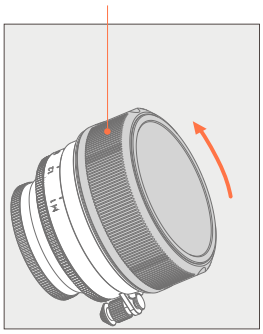

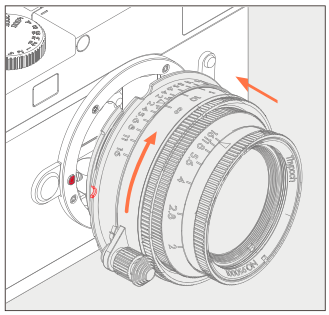

1.1 Attaching a Lens

Remove the lens rear cap, align the lens mount installation mark with the body mount mark (as shown in the figure left), and rotate the lens clockwise. The lens is in place when you hear a "click" sound.

Lens Release Button

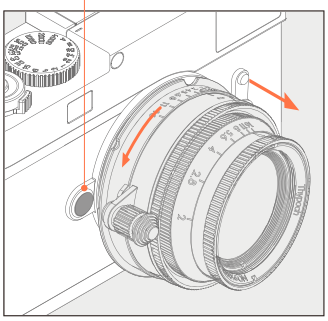

1.2 Removing the Lens

If you need to remove the lens from the camera, press the lens release button on the body and rotate the lens counterclock–wise to do it.

Note: After removing the lens, cover the rear lens cap and place the front end of the lens upward to avoid scratching the lens surface.

2. Attaching and Removing the UV Filter/Lens Hood

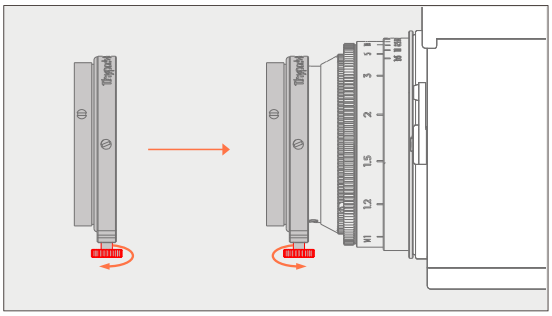

2.1 Attaching the UV Filter

Loosen the locking screw on the UV filter counterclockwise, align it with the front ring of the lens, and turn the locking screw clockwise. At this time, the filter is fixed on the front ring of the lens, and the installation is complete.

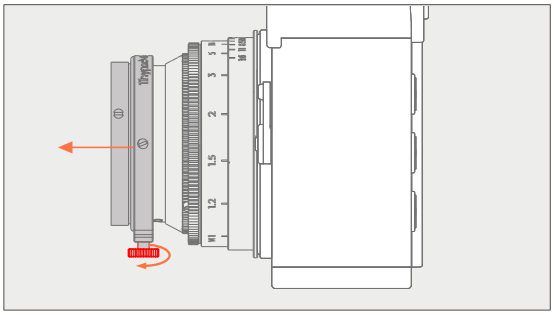

2.2 Removing the UV Filter

Unscrew the locking screw on the UV filter counterclockwise and remove the filter.

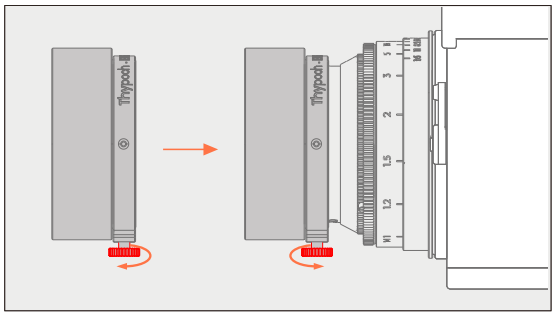

2.3 Attaching the Lens Hood

Loosen the locking screw on the lens hood counterclockwise, align it with the front ring of the lens, and turn the locking screw clockwise. At this time, the lens hood is fixed on the front ring of the lens, and the installation is complete.

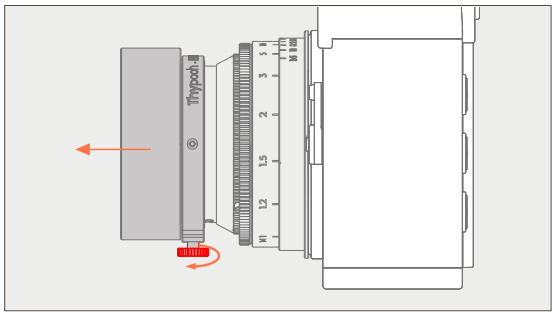

2.4 Removing the Lens Hood

Unscrew the locking screw on the lens hood counterclockwise and remove the hood.

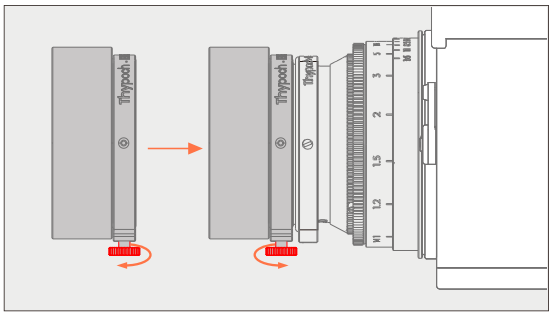

2.5 Combining Lens Hood with UV Filter

After installing the UV filter according to 2.1, loosen the locking screw on the hood counterclockwise, align it with the front end of the UV filter, and turn the locking screw clockwise. At this time, the hood is fixed on the front of the UV filter, which means the installation is complete.

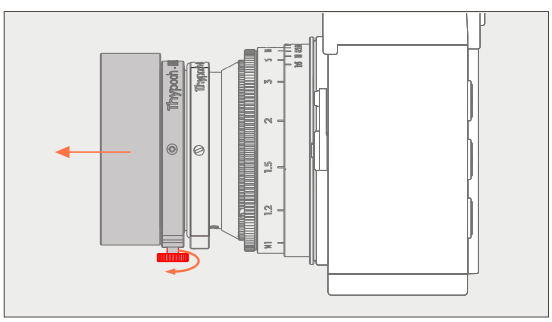

2.6 Removing Lens Hood from UV Filter

First remove the lens hood after unscrewing the locking screw on the hood counter–clockwise.
Then unscrew the locking screw on the UV filter counterclockwise and remove the filter.

Depth of Field Scale Reading

Back to Contents

The focus ring mark is shown by the red arrow in the figure below

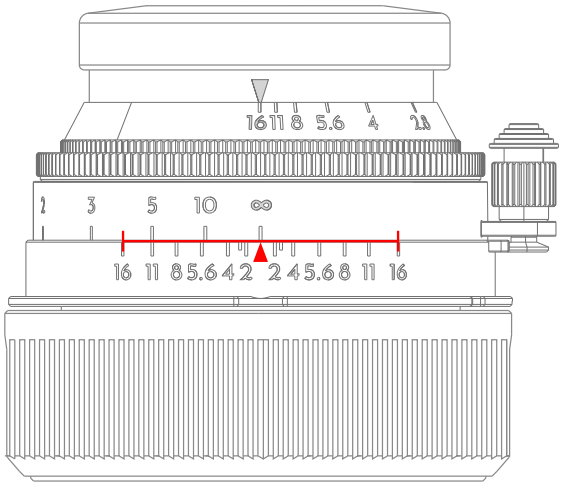

Note:

The depth of field scale is only used as a rough reference for the depth of field range,not the exact one.

The range of depth of field is the scale range corresponding to the straight line where the aperture scale is located on the left and right sides of the focus ring mark.

Adjusting the aperture level or focusing distance will change the depth of field range.

For example: As shown in the figure left, when the aperture is F16 and the focus distance is infinite, the depth of field range at this time is roughly 4m~infinity.

How to use trap focus

1. Predict the movement of the subject in advance;
2. Adjust the aperture and focus ring to ensure the depth of field range is larger than the subject's movement range;
3. The subject moves along the predicted movement trajectory.
   At this time, the subject will always remain in focus in the image.

Rangefinder Focus

Back to Contents

1. Install the lens to a camera with rangefinder focus function (such as Leica M series cameras);
2. Look at the viewfinder frame and turn the focus ring so that the overlapping image of the rangefinder area coincides with the subject (as shown in the picture below).

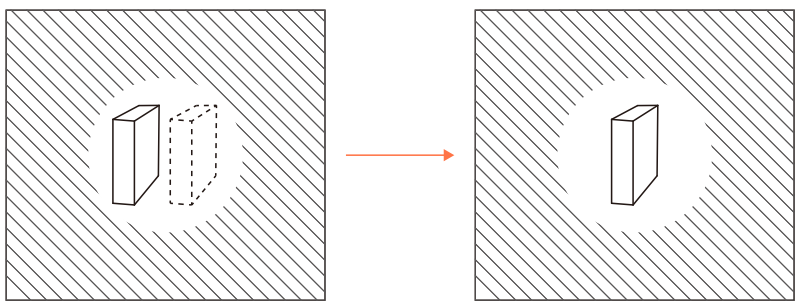

3. Observe the camera screen. At this time, the subject is in focus.

Notes:

(1) The rangefinder focus function only supports 1m~infinity;

(2) The rangefinder focus range will vary from different camera models;

(3) Please check the camera for an effective rangefinder focus range.

Specification

Back to Contents

Name	Eureka
Colour	Brass Version / Aluminum Version
Focal Length	50mm
Mount	M
Aperture	F2–F16
Image Circle	43.2mm (FF)
Construction of Optics	6 Elements in 4 Groups
Flange Distance	27.8mm (M)
Angle of view (diagonal, horizontal, vertical)	46°/39°/27°
Type of focusing	Manual focus
Close Focus (from sensor plane)	1m/3.3ft
Front Dia	ϕ35.9mm/1.4”
Filter Size	A36
Length	41.2mm/1.6” (after elongating) 27mm/1.1” (before elongating)
Iris Blade	12
Weight (Product)	Brass Version≈218g / Aluminum Version≈120g
Accessories	UV Filter、Lens Hood、Lens Front Cap、Lens Rear Cap

After-sales Service

Back to Contents

How to Obtain After-Sales Service

If a product does not function as warranted during the warranty period, you may obtain after-sales service by contacting Thypoch support team or Thypoch's authorized dealers. Charges may apply for services not covered by this After-Sales Policy.

The After-Sales Policy varies from the country or region of purchase. Please contact Thypoch for specific information about your location.

Warranty Service

Thypoch grants a minimum warranty period of one and a half year from the date of purchase for lenses purchased through Thypoch's official dealers. Thypoch warrants that each Thypoch product that you purchase will be free from material and workmanship defects under normal use in accordance with Thypoch's user's manual and accompanying documentation during the warranty period. You may claim warranty service by returning it to the point of purchase. The owner is responsible for all shipping costs. The warranty period varies with the country or region of purchase. Please store the proof of purchase in a safe place, as you will need to provide a valid one for the warranty service. Parts replaced during the warranty service become Thypoch's property.

Service Outside the Warranty Period

Request for after-sales service will normally be accepted within a period of roughly 5 years following the end of production, during which time spares will be kept on hand, although owners may be offered an equivalent product during this period in the event that spares are not available. The specific cost standard is subject to Thypoch's quotation. Compatibility with consumables and accessories for the original product is not guaranteed. To prevent waste, Thypoch may collect returned parts or products.

Service Turn Around Time

After we receive the product, the after-sales service will generally be completed within two weeks. This turn around time does not include the time of return shipping. If there are special circumstances, we will notify you in advance.

What This After–Sales Policy Does NOT Cover

This after–sales policy does not cover the following and charges may apply:

- No valid proof–of–purchase of the product.
- Damage caused by unauthorized modification, disassembly, or repair not in accordance with official instructions or manuals.
- Damage caused by improper installation and operation not in accordance with official instructions or manuals.
- Damage caused by the storage environment not in accordance with official instructions or manuals.
- Damage caused by operation in bad weather or environment (i.e. rain, sand/dust storms, humid environment, etc.).
- Damage caused by, any third party products, including those that Thypoch may provide or integrate into the Thypoch product at your request.
- Damage caused by any third–party product.
- Damage caused by force majeure.
- Consumable accessories and optional parts that come with this product.

Privacy

Thypoch obeys all applicable laws and regulations concerning the handling of names, addresses, phone numbers, and other personal information provided by users.

The Name and Content of Hazardous Substances

Back to Contents

Part Name	Hazardous Substances					
	Pb	Hg	Cd	Cr(VI)	PBB	PBDE
Lens Shell	○	○	○	○	○	○
Inner Mechanics	×	○	○	○	○	○
Optics	○	○	○	○	○	○
Other Parts	○	○	○	○	○	○

This table is formulated in accordance of SJ/T11364.

○: Indicates that the concentration of the hazardous substance in all homogeneous materials in the parts is below the relevant threshold of the GB/T26572 standard.

×: Indicates that the concentration of the hazardous substance of at least one of all homogeneous materials in the parts may be above the relevant threshold of the GB/T26572 standard.

The "×" in the above table indicates that there are one or more exemptions are applied in the parts stated in RoHS (2011/65/EU).

Thypoch

Shenzhen xuchi optics technology co., Ltd.

1F., Building Three, Xinwuxia Industrial Park, No.32,
Cuibao Rd., Baolong St., Longgang Dist. ShenZhen, China

SEEING INTO ETERNITY

www.thypoch.com

WECHAT : Thypoch



FB & INS : Thypoch