MOUNT-IT!

LCD/LED/Plasma Wall Mount Manual

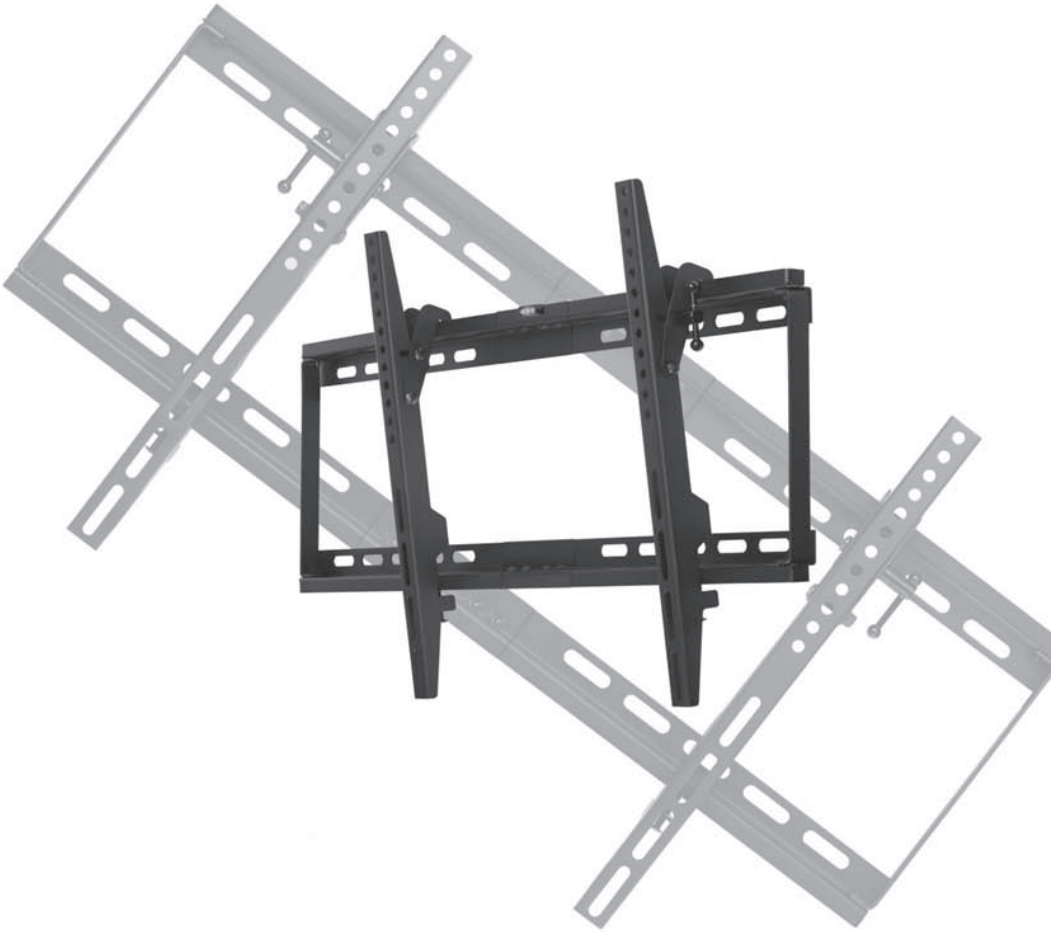

Product Overview:

Thank you for your Mount purchase. All Mounts are designed to provide excellent function, high quality, easy installation and stylish appearance. The tilt mount features a universal design that allows you to mount virtually any LED/LCD/Plasma display up to 65" with hole patterns up to 27" horizontally by 15.75" vertically. The Mount is designed with a slim 1.75" profile in the flat position yet provides up to 15 degrees of downward tilt. The Mount is constructed with 100% High Grade Steel providing a sturdy and reliable mount. The TV separable bracket arms and wall plate allow for easy installation. The wall plate will fit studs up to 26" apart including the typical 16" and 24" centered studs found in most US homes. Mounting hardware is included for your convenience. Thank you again and enjoy your mount.

Key Features:

- Covers Hole Patterns 27" Horizontal by 15.75" Vertical
- Fits Up to VESA 684x400mm
- Flat 1.75" Profile
- Can Install To 16" And 24" Stud Construction
- 15° of Downward Tilt
- Made From 100% High Grade Steel
- Installation Hardware Included

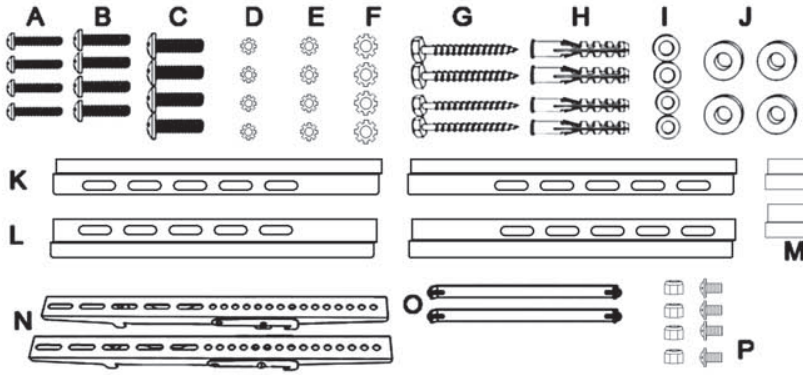

Part	Quantity	Description
A	4	M5 30mm Bolt
B	4	M6 30mm Bolt
C	4	M8 30mm Bolt
D	4	5mm Lock Wash
E	4	6mm Lock Wash
F	4	8mm Lock Wash
G	2ea	6mm and 8mm Lag Bolt
H	2ea	6mm and 8mm Concrete Wall Anchors
I	2ea	6mm and 8mm Washer
J	4	Spacers
K	2	Top Wall Plate
L	2	Bottom Wall Plate
M	2	Connecting steel
N	2	TV Arm Brackets
O	2	Wall Plate Vertical Side Brackets
P	8	Bolts and Washers

Specifications:

Hole Pattern Coverage/ Supported VESA Patterns:	Up To VESA 684x400mm or 27" Horizontal by 15.75" Vertical
Unit Weight:	5LBS
Unit Materials:	Arms, Wall Plate and TV Plate: 100% High Grade Steel
Tilt Range:	15° Downward
Wall Plate Screw Slots:	1.44" Wide by 0.45" Apart
Profile From Wall	1.75"
Wall Plate Dimensions:	28.6"L x 9.5"H
Maximum Weight Limit:	165 LBS
Cable Management:	27"H x 5.75"

Installation Instructions:

Note: Please read all installation instructions carefully before installation. For standard wood stud installation please start at Section 1: Wood Stud Installation. For Concrete/Mortar installations please refer to Section 2: Concrete/Masonry Installation.

Section 1: Wood Stud Installation

1. Locating a stud: First you will need to locate the stud in the wall you wish to mount your TV to. If you know how to locate your stud please continue to Step 2. If you do not know how to locate your stud please continue.

Finding a wooden stud in your home: One quick way to find a wall stud is to find a power outlet on the wall. Wall outlets are normally located next to a stud. The easiest way to confirm the location of a stud is with an electronic stud finder, which you can purchase at any hardware store. Once you find an initial stud, other wall studs are typically located in the wall every 16". Please note in some homes they are constructed with studs every 24". Additionally, Many walls have "non-standard" studs located next to doors, windows and fireplaces. To get the best support for your mount it is important that you put the mounting screws for your wall plate into the center of the wall stud. If it is difficult to determine the exact center of the stud with your stud finder, you can get the exact location of the stud using a thin nail and hammer. With the hammer, pound the thin nail into the wall in the area of the stud. If the nail is to the side of the stud it will go through the drywall and easily into the empty space in the wall. If the nail is on the stud, once it goes through the drywall, it will not go into the wall easily as it is hitting the wood of the stud. Keep repeating this process in the area of the stud until you can tell exactly where the stud starts and ends. The middle of these two points is the center of the stud. You can use drywall filler to cover up the holes from the thin nail, Additionally the wall mount can cover up the holes. +

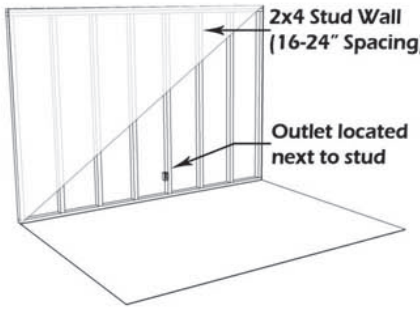

2. Assembling your wall plate: The mount's wall plate come in 6 parts. First, start by joining the two halves of the top and bottom wall plates using the supplied bolts and washers. The horizontal side plates come with a screw attached into both ends. To construct the wall plate simply remove the screws from both ends of the plates, these vertical plates go on the inner portion of the horizontal plate. Insert the screw into the pre-drilled holes on the ends of the top and bottom wall plates. Next, screw it into the vertical plate where you originally removed the screw. Follow this step with all four corners. You now will have the completed wall plate.

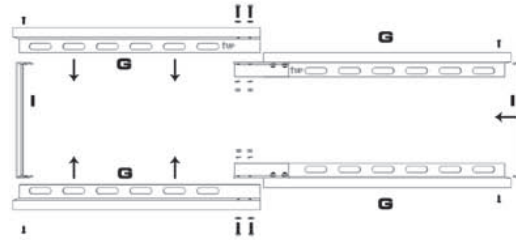

3. Mark and Pre-Drill Installation Points: Once you have found a location to install your Tv mount, located your studs and assembled the mount, Next mark the location of the intended drill holes. You may hold the mount on the wall and mark the holes with a pencil . Use a 5mm or 3/16" drill bit to drill 4 holes into the studs to a depth of 2 1/4".

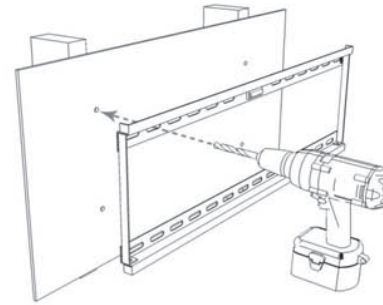

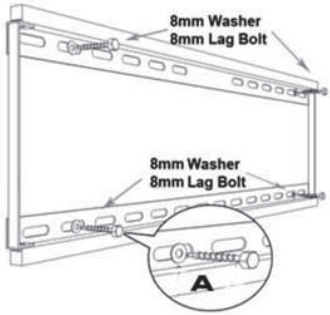

4 . Attaching the mount to your wall: Once the four holes are pre-drilled, affix the wall plate to the wall with the 8mm lag bolts and washers for the top and bottom wall plate. The included plastic anchors DO NOT need to be used for wood stud installation. Before you fully tighten all the lags bolts, use the bubble level to level the mount. Ensure not to over tighten the lag bolts. In the event the lag bolts are too tight and seem to not go in all the way, you may need to enlarge the holes slightly.

Note on Locating hardware to mount arms to your display: If your display does not come with the mounting screws in the back of the display, check the desk stand as in some cases the same screws to hold the desk stand are used also to mount your display. If neither of these options work, the hardware pack included with your mount contains several of the most common sized screws for mounting your arm brackets to your display.

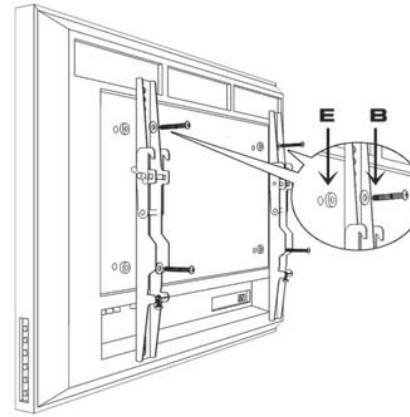

5. Installing arm brackets onto the back of your display: To attach the arms, use the proper bolt and lock washer for each of the four mounting holes. Attach the two arm brackets to the back of the display. In the event your display has recessed holes or a curved back, your hardware pack includes plastic spacers to fill the gaps. These plastic spacers are not necessary for most installations.

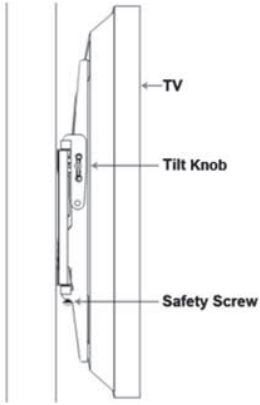

6. Adjusting your tilt: To adjust the tilt position on your display you will need to loosen the tilt knob of each of the arm brackets. Due to the narrow space between your display and the wall it is recommended to first adjust the tilt while you have the display off the mount . Once the knobs are loosened, adjust the arms to the desired position. After you have set the tilt position, tighten the knobs on the arm brackets then proceed to Step 7.

7. Attaching your display to the wall plate: Now you are ready to attach your display to the mount, this step may require two people. Take your display and lift it until the hooks set securely onto the top lip of the mount.

8. Tightening the safety screws: Using a Philips head screw driver tighten the two screws located at the bottom of the arm brackets. These screws prevent accidental liftoff of the wall plate. This will complete your installation of your mount.

Section 2: Concrete and Masonry Installation:

1. Mark Installation Points: Once you have selected the location you want the mount to be, mark the exact location of where the four anchors and lag bolts will be installed. You can hold your assembled mount against the wall to mark these locations. Next, drill the holes using a 10mm or 3/8" drill bit to a depth of 2".

Drilling into Concrete: When drilling into concrete or masonry, you have to use a special masonry drill bit which you can purchase at your local hardware store. Using a standard drill bit will not penetrate the concrete and it will just dull your drill bit. It is not recommended to drill and mount into concrete block or mortar joints. If mounting into concrete or masonry we recommend using all four of the supplied plastic anchors and lag bolts for maximum support. The supplied plastic anchors are rated for use up to 165LBS, but if you prefer you can go to your local hardware store and purchase metal concrete anchors.

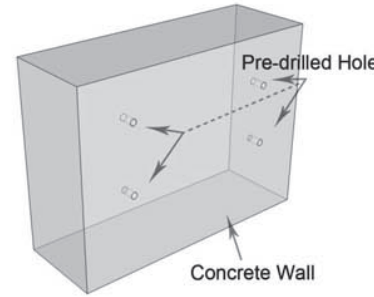

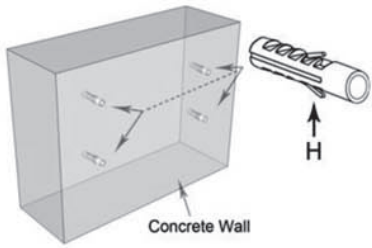

2. Attaching the mount to your wall: Once the holes are pre-drilled and all four plastic anchors are inserted, affix the wall plate with the four supplied lag bolts and washers into the wall.

At this point you can proceed back to Step 4 in the wood stud installation section to complete your Concrete/Masonry installation.

ATTENTION:

This mount must be installed using the supplied hardware with all four lag bolts screwed into your studs. If you are mounting into concrete or mortar, all four anchors and screws must be used for maximum support. This mount cannot be held liable for damage to Walls, TV's, Furniture, or Fixtures after installing this item.