rocstor®

SolidRack 6U Low Profile Vertical Mount
Switch-Depth Wall-Mount Rack Enclosure Cabinet

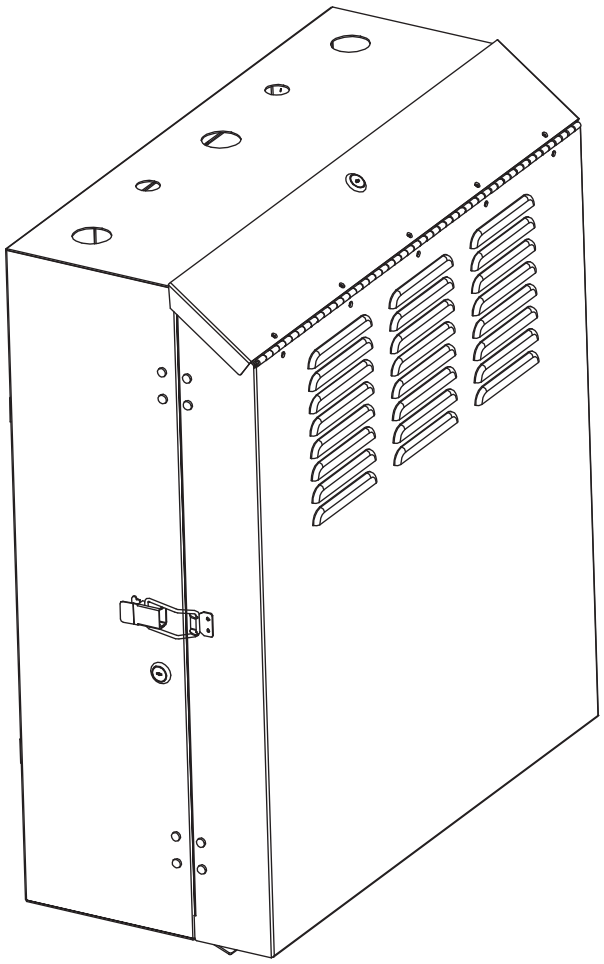

User Manual

Y10E071-B1

Table of Contents

	Page
Rocstor Legal Disclaimer	**1**
Important Safety Instructions	**2**
Important Safety Information	**3**
Introduction	**4**
Feature Identification	**4**
Hardware and Accessories	**5**
Unit Dimension	**5**
Enclosure Installation	**6, 7**
Enclosure Configuration	**8, 9, 10, 11, 12**
Wall Mounting the Enclosure	**13**
Five-Year Factory Warranty	**14**
Contact Information	**15**

Rocstor Legal Disclaimer

The information presented in this manual is not warranted by Rocstor to be totally authoritative, error free, or complete. This publication is not meant to be a substitute for a detailed operational and a site-specific development plan for the use of the product. Therefore, Rocstor assumes no liability for damages, violations of codes, improper installation, system failures, or any other problems that could arise based on the use of this Manual.

THE WARRANTY AND REMEDIES SET FORTH ABOVE ARE LIMITED IN TIME TO THE DURATION OF THE WARRANTY AS STATED HEREIN AND IS EXCLUSIVE IN LIEU OF ALL OTHER WARRANTIES, LEGAL THEORIES, REMEDIES AND CONDITIONS, WHETHER ORAL OR WRITTEN, EXPRESS OR IMPLIED. IN NO EVENT SHALL ROCSTOR, OR ANY PARENT, AFFILIATE OR SUBSIDIARY COMPANY OF ROCSTOR OR THEIR RESPECTIVE OFFICERS, DIRECTORS, OR EMPLOYEES BE LIABLE FOR ANY DIRECT, INDIRECT, CONSEQUENTIAL, PUNITIVE, SPECIAL, OR INCIDENTAL DAMAGES, INCLUDING, WITHOUT LIMITATION, DAMAGES FOR LOSS OF BUSINESS, CONTRACTS, REVENUE, LOST PROFITS, DATA, INFORMATION, GOODWILL OR BUSINESS INTERRUPTION RESULTING FROM OR ARISING OUT OF THE USE OF THE PRODUCT OR FAILURE TO FOLLOW INSTRUCTIONS IN THE MANUAL.

FURTHERMORE, ROCSTOR SPECIFICALLY DISCLAIMS ANY AND ALL IMPLIED WARRANTIES INCLUDING, WITHOUT LIMITATION, WARRANTIES OF MERCHANTABILITY AND FITNESS FOR A PARTICULAR PURPOSE. IF ROCSTOR CANNOT LAWFULLY DISCLAIM SUCH IMPLIED WARRANTIES, THOSE IMPLIED WARRANTIES WILL BE LIMITED IN DURATION TO THE DURATION SET FORTH ABOVE.

FURTHER STILL, ROCSTOR RESERVES THE RIGHT TO MAKE CHANGES OR UPDATES WITH RESPECT TO THE CONTENT OF THE PUBLICATION OR THE FORMAT THEREOF AT ANY TIME AFTER PURCHASE WITHOUT NOTICE.

Some states and provinces do not allow the exclusion or limitation of incidental or consequential damages or exclusions or limitations on the duration of implied warranties or conditions, so the above limitations or exclusions may not apply to you. This warranty gives you specific legal rights and you may also have other rights that vary by state or province.

Copyright, intellectual, and all other proprietary rights in the content of the manual (including but not limited to software, audio, video, text, and photographs) rests with Rocstor or its licensor. All rights in the content are the property of Rocstor and are not granted, licensed, assigned or otherwise passed to the purchaser' of the product or to persons having access to the information in the manual

Important Safety Instructions ⚠

⚠ WARNING

Please follow the essential and important instructions in this manual. The information provides you useful instructions for installation and customization of the rack or equipment.

• Wear appropriate personal protective equipment (PPE) when installing or configuring the cabinet.
• Keep the enclosure the away from moisture, high and low temperature extremes, flammable liquids and gases, conductive contaminants, dust and direct sunlight. And in a controlled indoor environment.
• The enclosure needs to be installed or be placed in order to have an adequate space at the front and rear of the enclosure for proper ventilation.
• It is important not to block, cover or insert objects into the enclosure that will block ventilation openings in all sides including front and top of the enclosure.
• The content of this packaging is easily tipped. Please be extra careful and use extreme caution
• When moving or unpacking this cabinet. Two people are preferred and are required to move and
• unpack the cabinet.
• Use a mechanical device such as a forklift or pallet jack to move the enclosure.
• No object should be placed on the enclosure, such as containers of liquid.
• Do not attempt to stack the enclosures due to excessive weight.
• This enclosure should be installed in a structurally sound area that can handle the load and the weight of the cabinet.
• If you place the cabinet on a level floor, make sure the floor is able to bear the weight of the enclosure, all equipment that will be installed in the enclosure.
• For permanent wall mount installation, make sure to securely fasten the enclosure to the building structure.

Important Safety Information

Please review and read the instructions very carefully in order to understand the specification of the equipment. This is essential information before installing, operating, service or maintaining your equipment. These messages or alerts may appear throughout this publication and manual for your purchased equipment. The messages are designed to warn you of possible hazards or to bring to your attention the information that would assist and clarifies steps and procedures.



This symbol and label provides Danger or Warning safety which indicates an electrical hazard exists. If instructions are not fully followed, it may result in personal injury.



This is a safety alert symbol. It is used to alert you to potential personal injury hazards. Please follow the instructions very carefully and obey all safety messages that follow this symbol to avoid possible injury or death.

⚠ DANGER

DANGER This symbol represents an imminently hazardous situation which, if not avoided, will result in death or serious injury. Please follow instructions carefully.

⚠ WARNING

WARNING This symbol represents a potentially hazardous situation which, if not avoided, can result in death or serious injury. Please follow instructions carefully.

⚠ CAUTION

CAUTION This symbol indicates a potentially hazardous situation which, if not avoided, can result in minor or moderate injury.

CAUTION

CAUTION, This symbol is used without the safety alert symbol, indicates a potentially hazardous situation which, if not avoided, can result in equipment damage. Please follow instructions carefully. Please follow instructions carefully.

NOTICE

NOTICE This symbol provides informations and practices not related to physical injury including certain environmental hazards, potential damage or loss of data. Please follow instructions carefully.

Introduction

Rocstor SolidRack 6U Low Profile Vertical Mount Switch-Depth Wall-Mount Rack Enclosure Cabinet - 6U Rack Height x 19" Rack Width - 20 in. Deep - Wall Mountable - 150 lb Static/Stationary Weight Capacity - Wallmount Cabinet - Steel - (Optional Cabinet fan PN: Y10E014-B1) - Black

Feature Identification

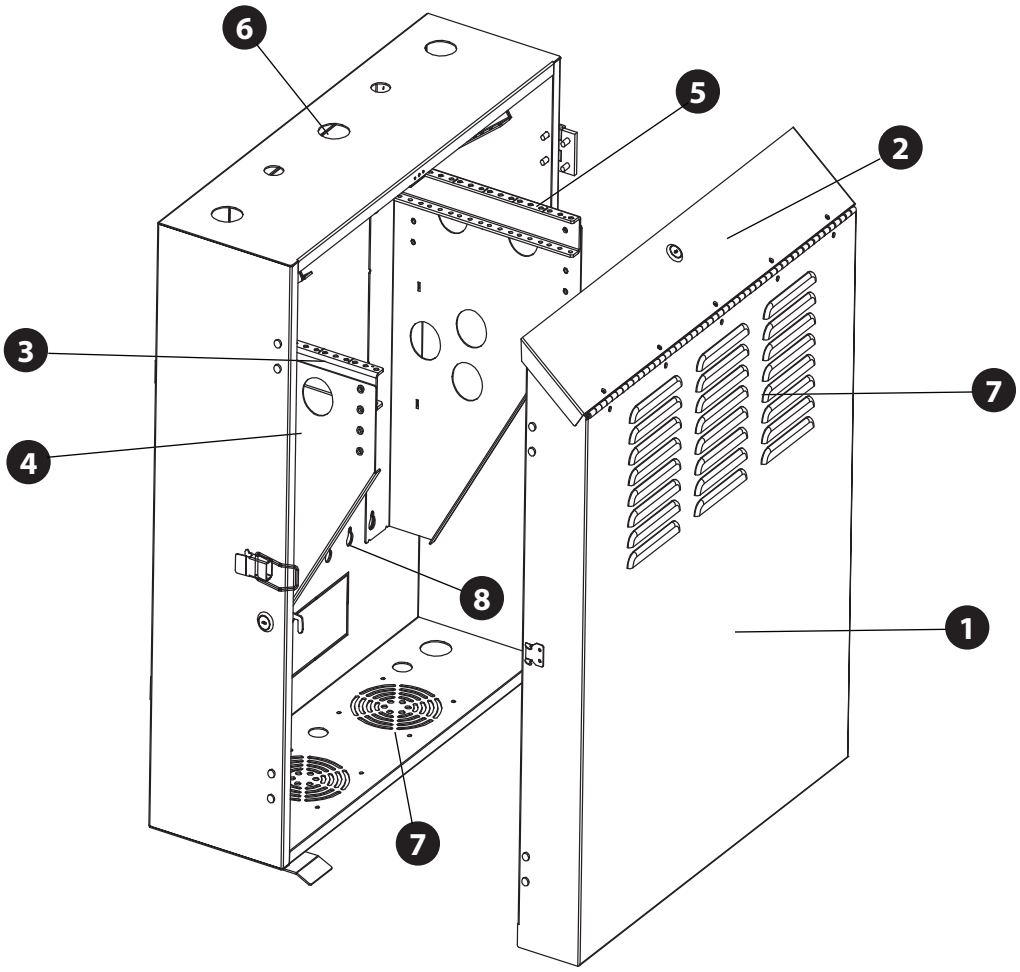

1. Front Door
2. Top Panel Door
3. Vertical Mounting Rails
4. Vertical Mounting Bracket
5. Patch Panel Mounting Bracket
6. Cable Access Holes
7. Vents
8. Wall-Mounting Slots

Hardware and Accessories

QTY		
4	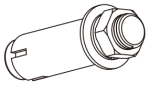	Wall Anchor
4		Large Screw M6 x L70mm
12		M6 1/2" Screw
12		12-24 5/8" Rack Screw
2		Cabinet Keys

Unit Dimension

Dimension Unit : Millimeter (mm)

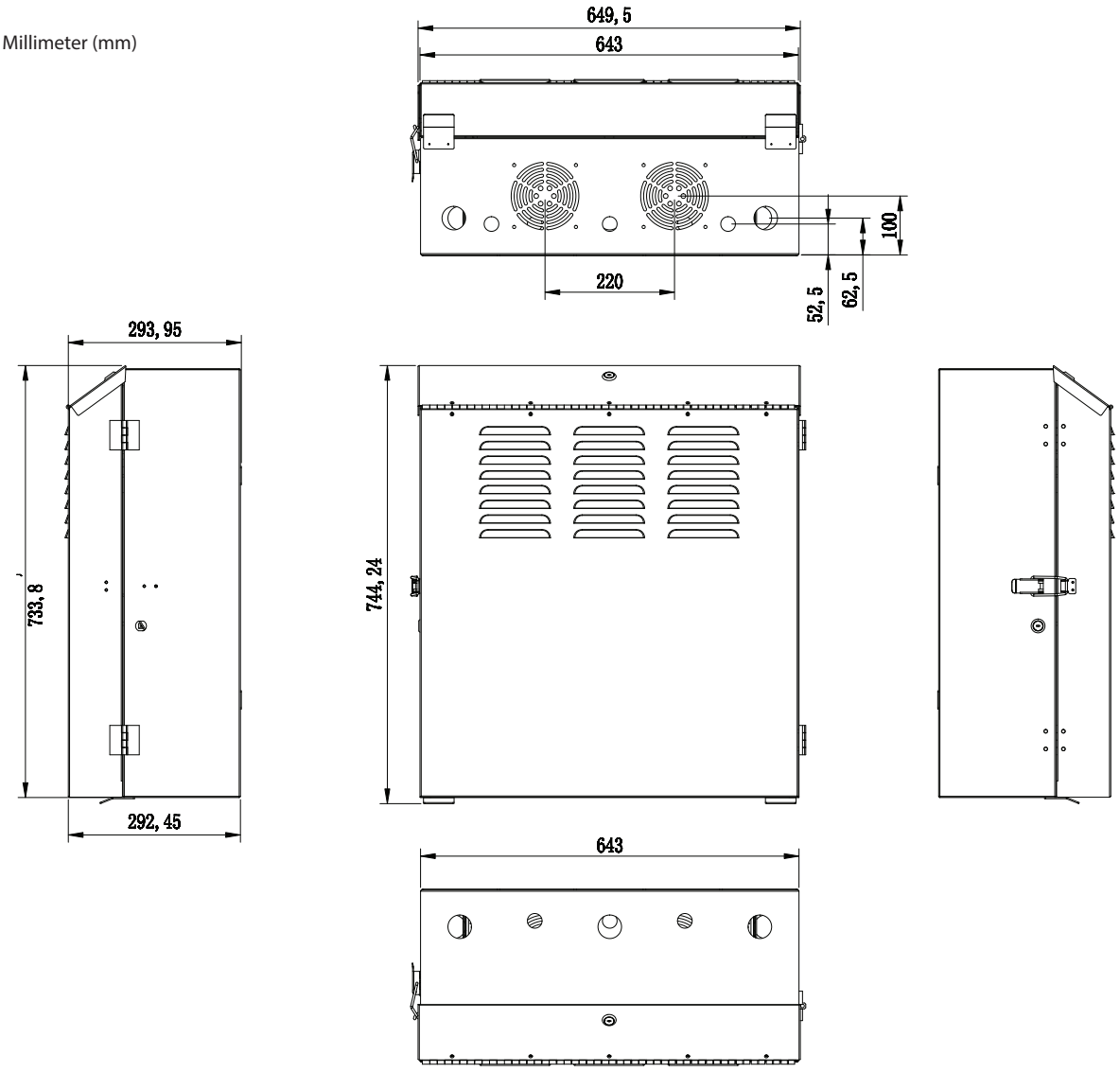

Enclosure Installation

CAUTION

CAUTION, This symbol is used without the safety alert symbol, indicates a potentially hazardous situation which, if not avoided, can result in equipment damage. Please follow instructions carefully. Please follow instructions carefully.

NOTICE

NOTICE This symbol provides informations and practices not related to physical injury including certain environmental hazards, potential damage or loss of data. Please follow instructions carefully.

Tools Requirement & Preparation for Installation

Make sure you inspect the area that this cabinet will be installed. This enclosure should be installed in a structurally sound area that can handle the load and the weight of the cabinet. If you place the cabinet on a level floor, make sure the floor can bear the weight of the enclosure, all equipment that will be installed in the enclosure. For permanent wall mount installation, make sure to securely fasten the enclosure to the building structure.

The following tools are required for proper installation:

- **Level (not included)**
- **Phillips-head screwdriver (not included)**
- **Appropriate tools for wall mounting (not included)**
- **Appropriate hardware for wall mounting (not included)**

Enclosure Installation

⚠ WARNING

Use at least two people to unpack the enclosure.



Move the Cabinet

TIP/ HEAVY EQUIPMENT HAZARD

- Be extremely cautious when moving or unpacking this rack/cabinet.
- When moving or unpacking this cabinet. Two people are preferred and are required to move and unpack the cabinet.
- Make sure the leveling feet are up when moving or pushing the cabinet. DO NOT push the cabinet from its sides.

Not following these instructions carefully, it can result in death, serious injury, or equipment damages.

Customer Equipment Installation

- Review the equipment manufacturer's installation instructions.
- Locate the top and bottom U-space on the vertical mounting rails. Every third hole on the mounting rails is numbered to indicate the middle of a U-space.
- Install the cage nuts on the interior of the vertical mounting rail; then install the equipment. (To remove a cage nut, squeeze the sides to release it from the square hole.)

Enclosure Configuration

Locks

Both the front door and the top panel door are equipped with locks accessible through the provided keys. Additionally, the front door latch can be secured with a user-supplied padlock to enhance security.

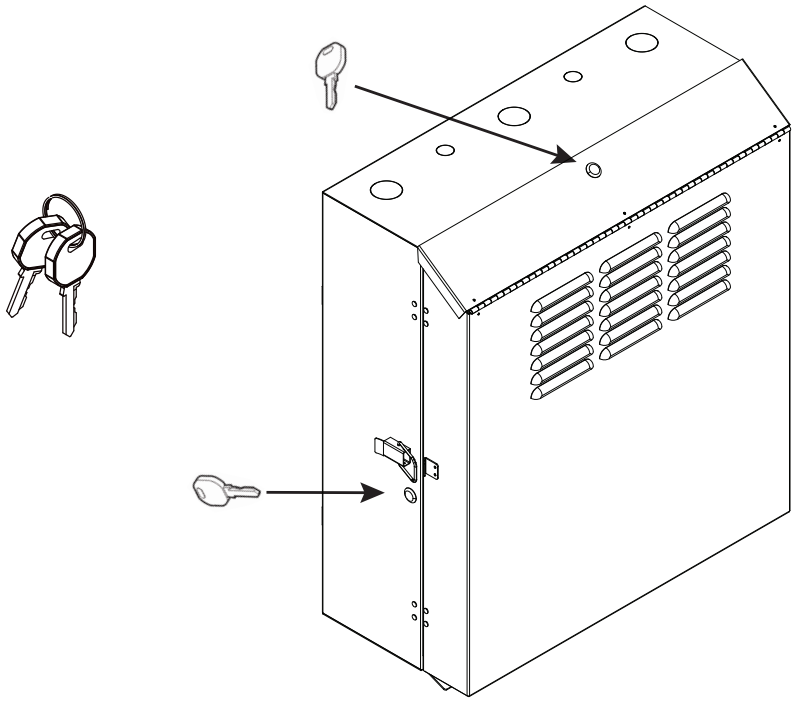

Cable Access and Management

For seamless cable management, the enclosure features circular cable access ports on both the top and bottom panels. The top panel is equipped with three 1.57" (40mm) ports and two 1" (25mm)ports, while the bottom panel has three 1" (25mm) ports and two 1.57" (40mm) ports.

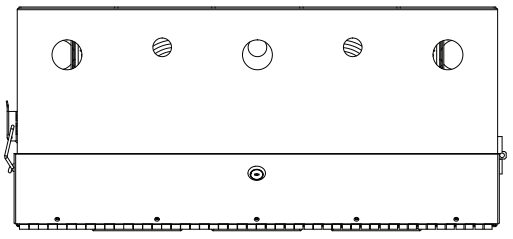

Top View

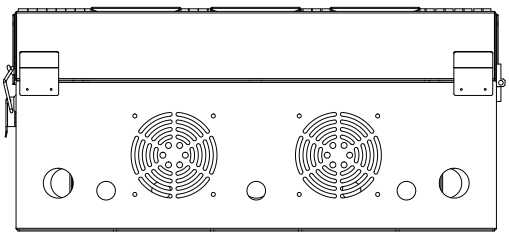

Bottom View

Enclosure Configuration

Reversing the Front Door

In various installation scenarios, it might be necessary to reverse the swing direction of the door. To achieve this, the front door can be easily reversed by reconfiguring the hinges, latch, and lock to the opposite side. Begin by removing the hinges, latch, and lock from their current location and transferring them to the corre sponding holes on the opposite side. As a result, you will have two hinges (one at the top and one at the bottom) on one side, while the latch and lock will be positioned on the other side.

Note: Within the enclosure, you will notice small rubber fill plugs in the unused screw holes. These plugs can be effortlessly removed. Ensure to keep them and reinsert them into the unused holes on the opposite side.

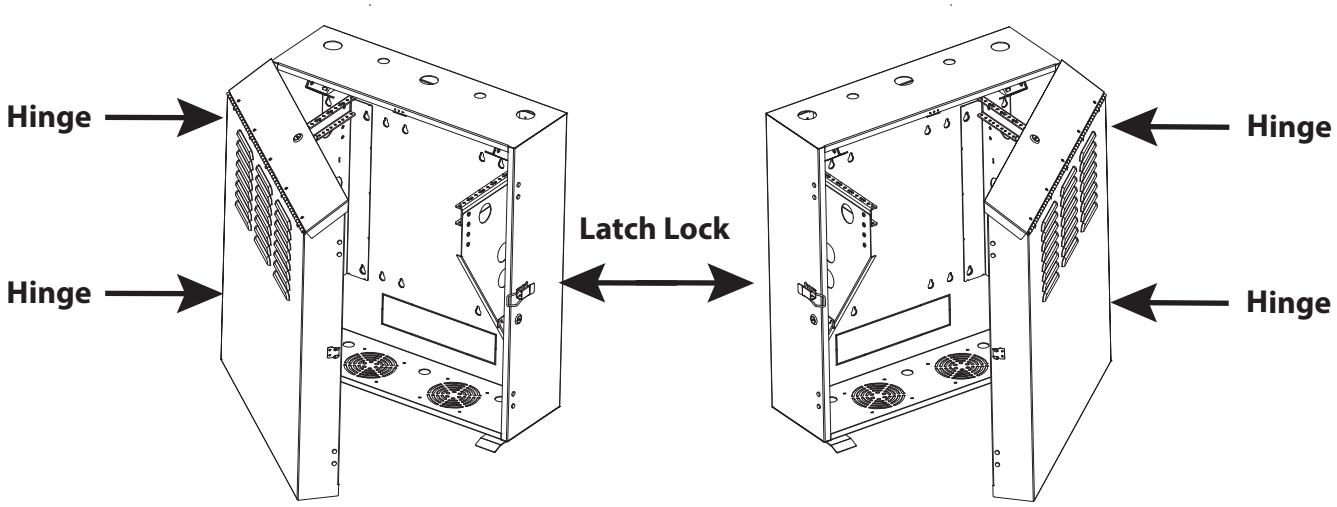

Mounting Rails Installation

The enclosure offers two threading options to accommodate your preference and the type of equipment being used. One side of the rail features M6 threading, while the other side is threaded for 12-24 hardware. The rails are clearly labeled to indicate both options. Ensure that the desired thread pattern is positioned on top and proceed with installing your equipment. Utilize the provided M6 or 12-24 hardware included with the enclosure, or use the hardware provided with your equipment, to securely fasten the equipment to the rails.

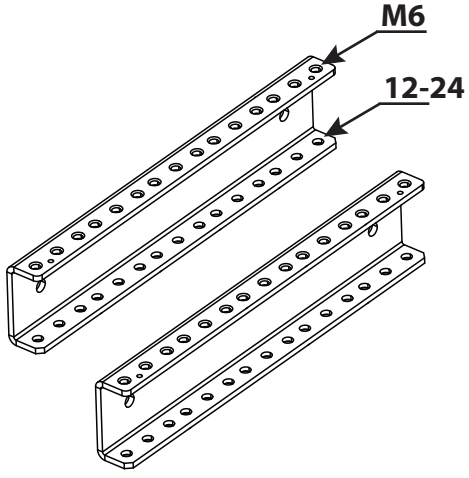

Enclosure Configuration

Adjusting the Mounting Rail Depth

Note: Please ensure that both screws are installed and attached to the vertical mounting bracket before using the mounting rails. Additionally, avoid adjusting the rails while equipment is installed in the enclosure.

The two horizontal mounting rails come pre-installed with a default mounting depth of 20 inches for this cabinet. If needed, the rails can be adjusted in 1-inch increments to accommodate mounting depths ranging from 17 to 20 inches. It is typically unnecessary to adjust the mounting rails unless your specific equipment necessitates a different mounting depth.

To modify the height of the rails, follow these steps: remove the two screws, vertically position the rails at the desired depth, and reattach them using the same two screws. Ensure to adjust both rails equally for proper alignment.

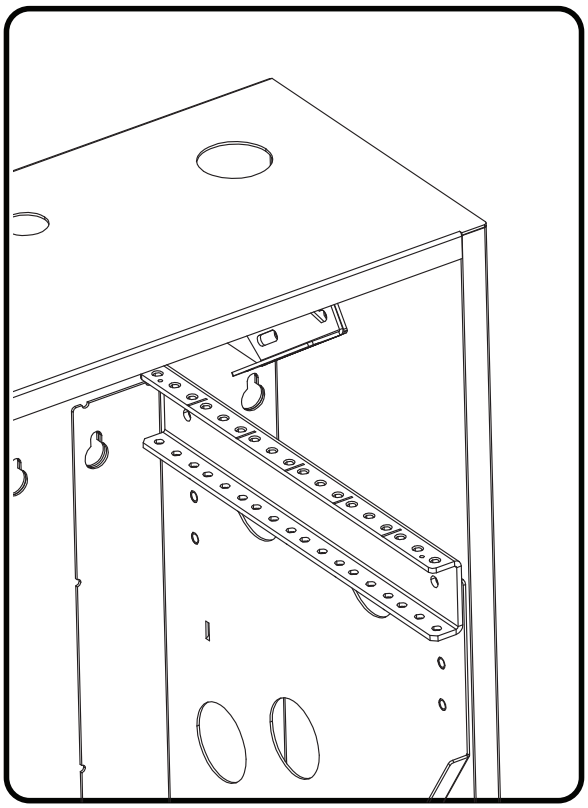

Equipment Installation

Installing your Equipment

IMPORTANT: Before installing your equipment, ensure that the enclosure is securely mounted and stabilized. When utilizing sliding equipment rails, exercise caution while extending them. Refrain from extending more than one set of sliding equipment rails simultaneously, and avoid extending them near the top of the enclosure.

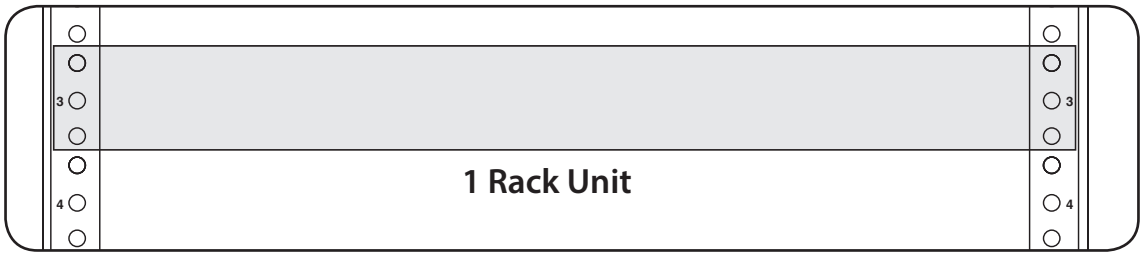

For ease of use, each rack unit is clearly indicated on the rail. To install your equipment, carefully lower it into the enclosure and place it on the mounting rails. Ensure that the mounting holes on your equipment align with the corresponding holes on the mounting rails while staying in line with the rail markings. Utilize the provided hardware or compatible hardware that came with your component to securely fasten your equipment to the rack rails.

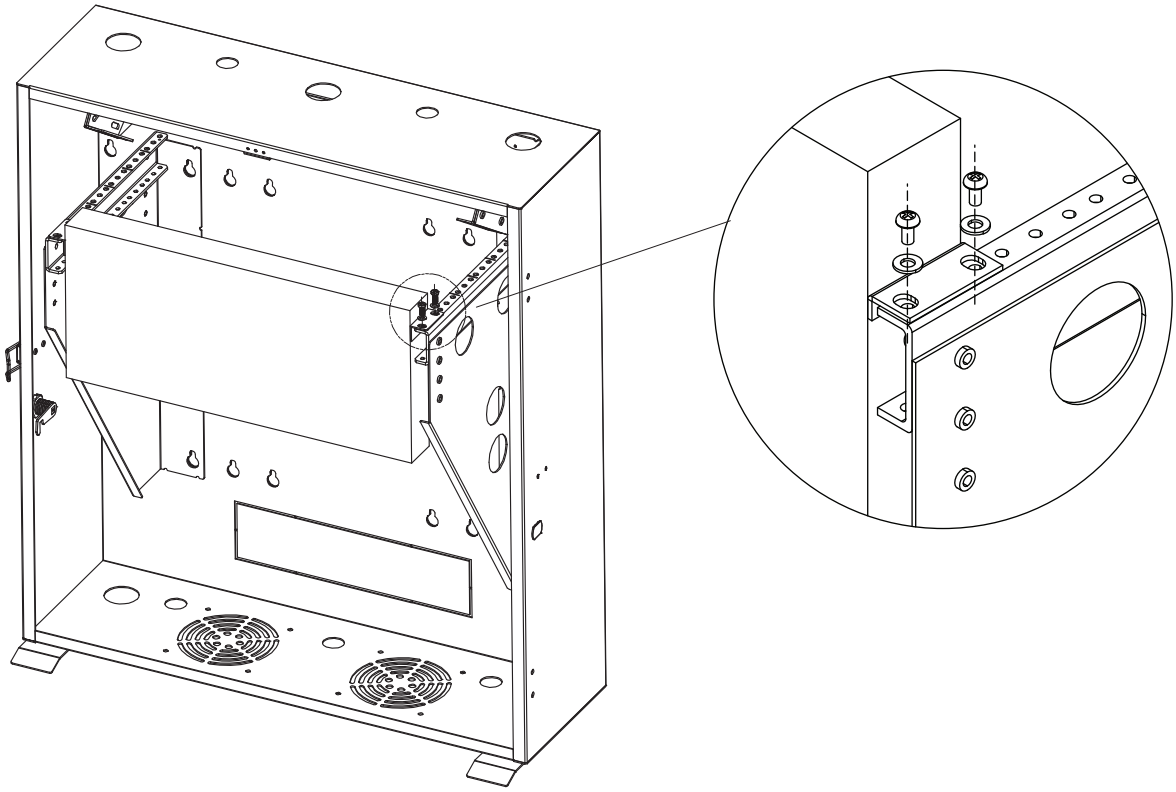

Equipment Installation

Optional Patch Panel Installation

The SolidRack 5U Low Profile Vertical Mount features a built-in, slide-out mounting bracket at the top of the enclosure. This bracket is designed to secure a patch panel, providing convenient cabling access. To install a patch panel on the mounting bracket, utilize the provided mounting screws and washers. Fasten your equipment to the rack rail, ensuring to position the washers between the screws and the patch panel mounting bracket.

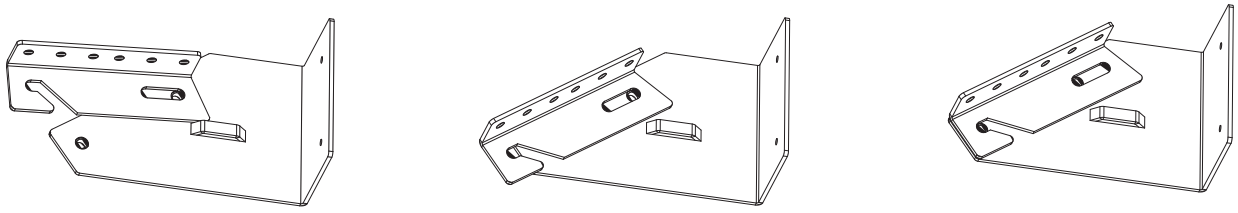

Wall Mounting the Enclosure

⚠ WARNING

Install the appropriate hardware (not included) to the wall. Follow all local regulations. Refrain from mounting the enclosure cabinet to the wall with equipment in the cabinet.

Rocstor recommends the cabinet enclosure installation to be performed by professional or qualified technician. Plan for the installation and make sure there are no equipment installed in the cabinet during installation. Prior wall mounting and rack installation, first use a tape measure and precisely mark the position of the rack. Then use a level and make sure the rack will be installed in the straight position. Use correct fasteners which are not included and place the rack and secure the cabinet to the wall. Your installer or technician must use the correct mounting equipment for installation of the rack to cinder block, concrete, drywall or wood studs.

Warning: Make sure you follow the installation manual carefully. Failure to incorrectly installing the cabinet, it will cause bodily injury, cabinet, and property damages. Make sure the supporting surface can safely handle the combined load of the equipment and attached

Mounting your Enclosure

To offer versatility, the cabinet is equipped with keyhole cutouts at the back, allowing for multiple mounting options. There are four sets of five keyholes, providing five mounting possibilities on 16-inch centers. Each set of keyholes is spaced at 2-inch intervals. For precise positioning, it is recommended to use a level and measurement tools. Always utilize suitable mounting hardware to securely attach the enclosure to the wall. Prior to installation, ensure that the mounting surface is capable of safely supporting the combined weight of the enclosure, mounting hardware, and equipment within. Additionally, verify that the mounting surface is suitable for drilling. Please note that the unit includes mounting hardware specifically for wooden studs, so alternative hardware will be necessary for surfaces other than wooden studs. Professional installation or the assistance of professionals is advised. It is important to acknowledge that Rocstor will not assume responsibility for any improper use or installation of their products.

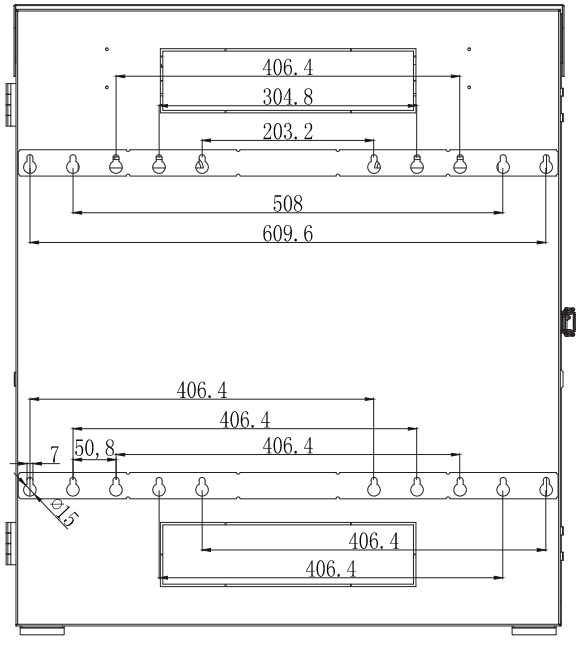

Five-Year Factory Warranty

Rocstor provides a Limited Factory Warranty which applies to products you have purchased for commercial or industrial use in the ordinary course of your business.

Terms of warranty

Rocstor warrants its SolidRack product series to be free from defects in materials and workmanship for a period of five years from the date of purchase. Rocstor's obligation under this warranty coverage is limited to repairing or replacing, at its sole discretion, any such defective products. This warranty does not apply to equipment that has been damaged by accident, negligence, or misapplication or has been altered or modified in any way. In the event Rocstor repairs or provide a replacement of a defective product or part, the warranty does not extend the original warranty period. Rocstor reserves the right to repair or replace any parts under warranty as new or factory re manufactured.

Non-transferable warranty

This warranty extends only to the original purchaser who must have properly registered the product. The product may be registered at the Rocstor Web site, https://rocstor.com/customer-support/warranty registration.

Exclusions

If Rocstor tests or examines the alleged defect in the product and finds that the damages or defects do not exist or were caused by a third party or an end user's misuse, improper installation or testing, or negligence, then Rocstor shall not be liable under the warranty. Furthermore, unauthorized attempts to repair or modify the product by wrong or inadequate electrical connection or voltage, inadequate or inappropriate site operation conditions, repair, installation corrosive area or atmosphere, a change in location or operating conditions or use, repair by non-Rocstor designated personnel, exposure to the elements, fire, Acts of God, theft, or equipment installation not recommended or contrary to Rocstor's specifications or recommendations. Warranties will be void and Rocstor will not be liable if the product serial number is tampered with, altered, removed, defaced or any other cause beyond the range of intended use.

Corporate Headquarters
12979 Arroyo St
San Fernando, CA 91340 - USA

Office: +1 (818) 727-7000
Fax: +1 (818) 875-0002
Email: info@Rocstor.com

Technical Support / RMA
Hours: 9:00 am - 5:00 pm PST
Mon - Fri (excluding holidays)

Tell: +1 (818) 727-7000 (Domestic and International)
Fax: +1 (818) 875-0002
Email: support@Rocstor.com

Sales Info
Hours: 8:00 am - 5:00 pm PST
Mon - Fri (excluding holidays)

Tell: +1 (818) 727-7000 (Domestic and International)
Fax: +1 (818) 875-0002
Email: support@Rocstor.com

Corporate, Government and Academic Customers

Our Corporate Sales Team's goal is to help our U.S.A. and Canadian customers find a storage solution that best serves their needs. We will help you determine your best purchasing options. For more information please contact the appropriate department below or call us at +1 (818) 727-7000.

General sales information: sales@Rocstor.com
Corporate sales information: corporate_sales@Rocstor.com
Educational sales information: academic_sales@Rocstor.com
Federal, State & Local government sales information: government_sales@Rocstor.com

Resellers/Business Development/OEM Partners

All Channel National and International Resellers, VARs, Consultants …
contact Rocstor Channel Sales: call: +1 (818) 727-7000
Email: reseller_info@Rocstor.com