8381A

Operating Manual

Genelec 8381A
Smart Active Monitor

GENELEC®



GENELEC®

8381A Quick Setup Guide

Needed tools



Inventory

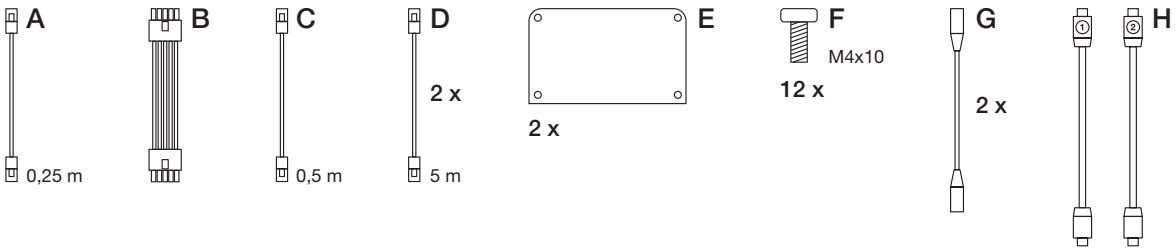

A CAT45 cable
B Interconnection cable
C CAT45 cable
D CAT45 cable
E Protective plate
F Bolt
G XLR
H Speakon
I Protective sleeve
J Mains cable
K Rubber feet for amplifiers
L Card
M 8381A Quick Setup Guide

Warnings

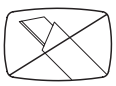

Do not use blades for opening plastic bags.

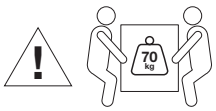

Caution! Heavy package. Lift carefully with the help of another person.



Please only remove the protective foam in front of the drivers after completely assembling the monitor unit.



WARNING: This loudspeaker may cause traumatic and permanent hearing damage. Before applying power, read the warnings in the operating manual and the paragraphs about analogue and digital input sensitivity.

GENELEC®

Unpacking and assembling

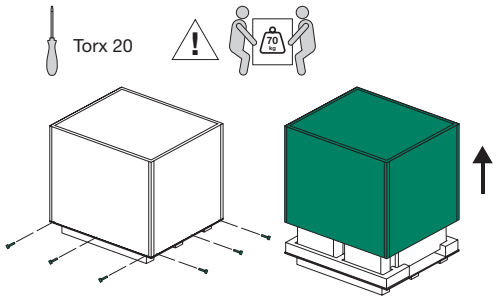

1. Remove screws from the box's base and lift the box's top section away.

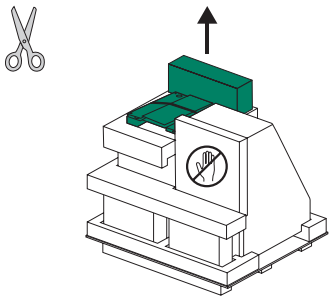

2. Remove accessory box, then cut incliner wedges free and remove them.

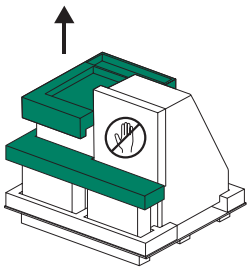

3. Remove the two large pieces of foam padding.

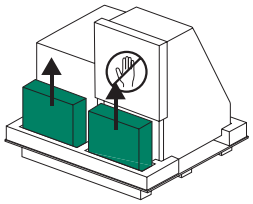

4. Remove both amplifiers and take them out of their plastic bags.

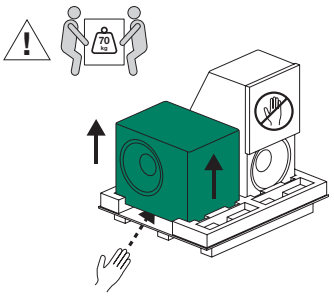

5. Remove plastic bag from the lower enclosure and lift lower enclosure to final location.

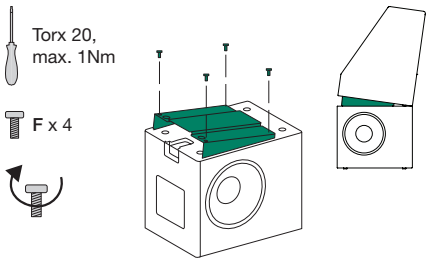

6. (Optional) If tilting is needed, install incliner wedge onto lower enclosure. Attach with 4 pcs M4x10 torx bolts.

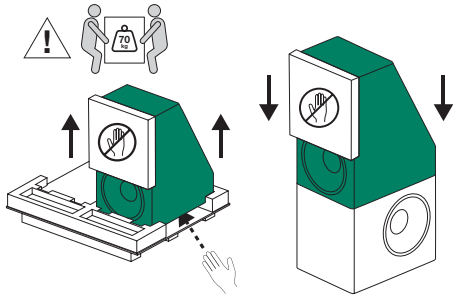

7. Remove plastic bag from upper enclosure and lift upper enclosure onto lower enclosure.

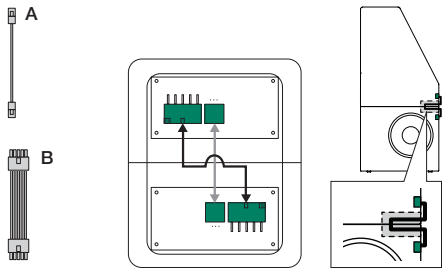

8. Insert cables A and B to connect upper and lower enclosures. Carefully push cable into space between enclosures.

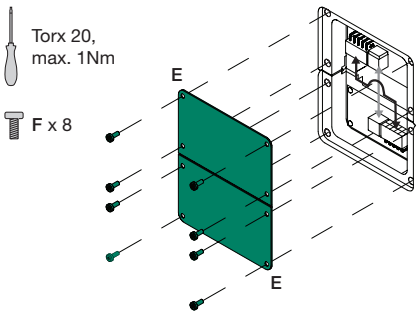

9. Attach protective plates (E) using 8 pcs torx bolts (F) in total. Do not overtighten.

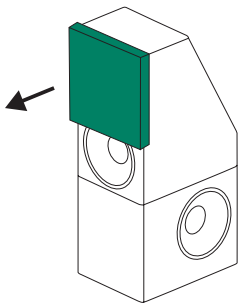

10. Carefully remove protective foam. Foam has been secured with double-sided tape.

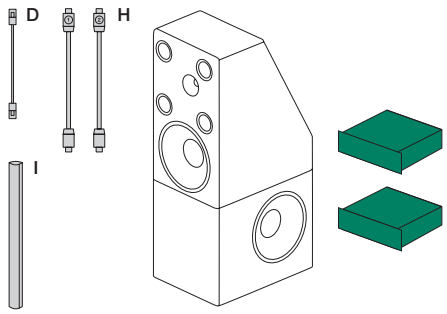

11. Connect amplifiers to inputs in bottom enclosure using cables D and H. Match amp 1 to input 1 and amp 2 to input 2. Match serial numbers between amplifiers and enclosure inputs. (Optional) Sleeve (I) may be used over cables D and H.

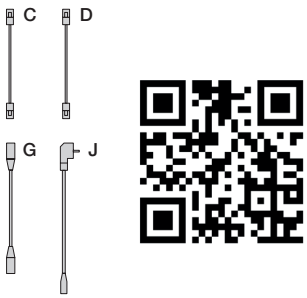

12. Use cables C, D, and G to connect amplifiers to each other, and J to the mains power. Scan QR code to read detailed explanation in 8381A Operating Manual and GLM System Operating Manual.

Genelec 8381A Operating Manual



Warning!
This loudspeaker may cause traumatic and permanent hearing damage. Read warnings in the operating manual before applying power. Ear protection should be worn at all times when working in the vicinity of a powered system.

Introduction

Congratulations and thank you for choosing Genelec!

Since 1978, Genelec has been guided by a single idea – to make exceptional active monitors that deliver neutral and accurate sound in every kind of acoustical environment. In Genelec's quest for this ultimate goal, our unrivalled commitment to research and development has led us to continuously develop innovative driver technology, electronic circuitry, enclosure designs and more. Our design philosophy is based on sustainability and environmental values, where industrial design serves the acoustical performance of our products.

Your Genelec product has been designed and manufactured with great care in our factory, in Finland, using environmentally efficient solutions to give you reliable operation over many years.

Please take the time to read this manual. Happy monitoring!

General Description

System Design

The Genelec 8381A Adaptive Point Source Main Monitor is intended for free-standing placement and is designed for precise stereo imaging and neutral sound reproduction in high sound pressure level applications in medium to large control rooms. The maximum SPL of the 8381A enables use at most control room listening distances at high linearity, delivering excellent audible dynamic range. The system can be placed directly on the floor when an acoustic axis height equal to the typical seating height in a studio is needed for natural stereo image creation (1.2 m) and includes an inclining kit to optimally aim the acoustic axis towards the listening position when the monitors is placed on a pedestal so that the acoustic axis is located higher. A height extension block is available as an option.

High Resolution

The system low frequency response extends down to 20 Hz (-6 dB) and up to 35 kHz (-6 dB) for complete recorded audio content playback capability and capacity for high resolution output. The system is time aligned for equal input-to-output delay at all frequencies down to 200 Hz, ensuring perfect transient waveform fidelity.

Point Source Architecture

The acoustically coaxial operating principle – with the adaptive woofer technology – enable precise reproduction integrating also the very low frequencies in the sound image excellently to the full audible frequency range while minimising room-related influence on sound, improving the quality of the complete system sound imaging. In the Adaptive Point Source Continued Directivity design, most frequencies of audio appear to come from the same location and the directivity is maintained across the frequency range.

Because the acoustic design of 8381A is a Point Source down to bass frequencies, the listening distance can be freely selected, including very short listening distances. The maximum listening distance is not limited and is normally set by the maximum SPL requirement at the listening location, giving 8381A great flexibility.

Time-Domain Alignment

In addition to keeping the directivity and source of audio constant, the 8381A monitor also very carefully aligns all frequencies in time, so that the input-to-output latency of 8381A is constant over a wide range of frequencies, and this improves the reproduction of the pressure waveforms and imaging.

All loudspeakers naturally delay audio. This delay progressively increases towards low frequencies and when the bandwidth

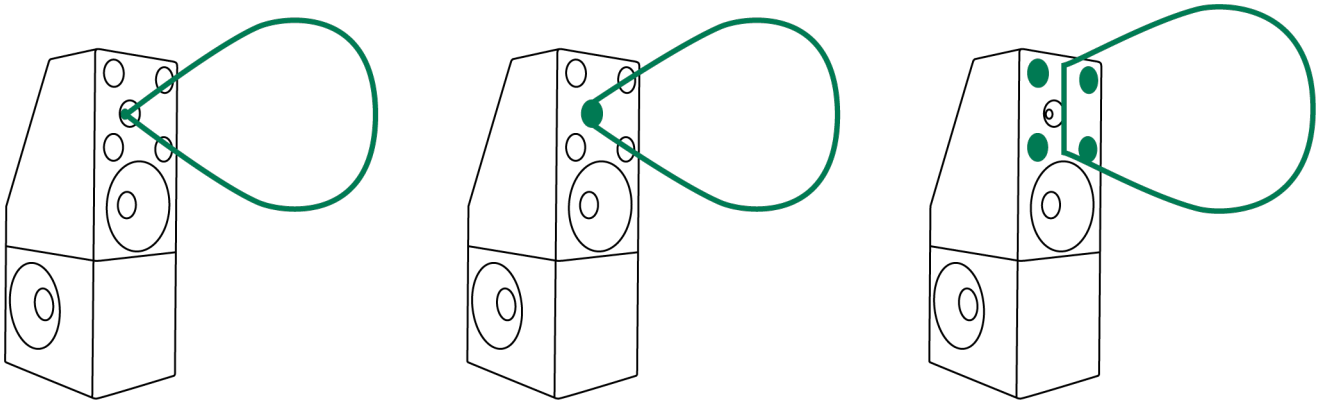

Figure 1. Principles of maintaining directivity; high frequencies in the tweeter (left), coaxial midrange driver range (middle) and low midrange (right).

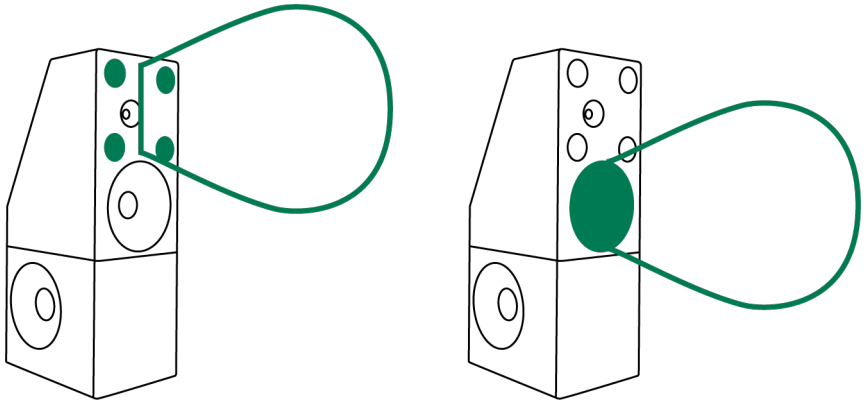

Figure 2. Principles of maintaining directivity; low midrange (left) matches to the directivity of the 15-in woofer (right).

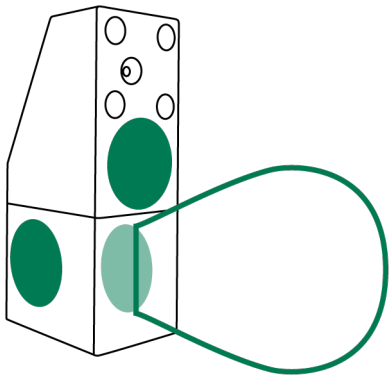

Figure 3. Room-adaptive woofer system adjusts directivity according to room acoustics so that the frequency response is neutral at the listening position.

gets narrower. This means that in a typical loudspeaker, the input-to-output latency is the smallest close to the highest frequency, progressively increases towards the bass frequencies, and close to the low corner frequency where the loudspeaker output starts reducing the input-to-output delay is usually the highest.

Genelec monitors use digital signal processing to align the input-to-output delay. This is done by applying a very small amount of delay to higher frequencies to line them up with lower frequencies. 8381A monitor offers two values for this line-up, 'low latency' and 'extended phase linearity'. These can be selected in the GLM software. The 'low latency' mode applies the minimum amount of additional delay at higher frequencies and can keep the latency constant down to about 500 Hz. The 'extended phase linearity' setting applies just a little bit more delay at higher frequencies and keeps the delay constant down to about 200 Hz. As the delay has a relationship to the rate of changes of the system phase response, these settings also have the effect that the phase change for audio down to these frequencies remains very small, and all audio output is in phase across the important mid and high frequencies, and this results in very accurate reproduction of the waveforms at the monitor output and therefore excellent reproduction of the details in audio transients.

High-SPL Coaxial

The coaxial driver is installed in a directivity control waveguide (DCW). The coaxial driver uses a high linearity compression tweeter with a 13 mm (.5 in) throat diameter and a 5-in conical midrange driver forming a part of the complete Genelec Directivity Control Waveguide™ (DCW™) design. The system directivity is set by the driver size (diameter) and the directivity control effect of the DCW and enclosure front.

Quad Midrange System

The top enclosure offers an acoustic point source design the high SPL tweeter-midrange coaxial driver in a DCW is supplemented with four 127 mm (5 in) dome drivers. Combined, their acoustic output appears to locate on the same acoustic axis with the coaxial driver, and the quad

midrange system directivity matches with the coaxial system and the 381 mm (15 in) front woofer, maintaining directivity at upper bass, midrange and to high frequencies. This results in a well-controlled and predictable sound character in all room acoustics and produces detailed and precise acoustic imaging for free-standing monitoring loudspeaker arrangements.

Room Adaptive Woofer System

The woofer in the front of the top enclosure and the two woofer transducers in the bottom enclosure combine into a Complementary Mode adaptive woofer system. The two lowest crossover frequencies are adjustable with the GLM software. The crossovers from the quad midrange system to the front woofer and from the front woofer to the double low-woofer system can also be set during system calibration with GLM.

Towards low frequencies, the bass reproduction moves from to the front 381 mm (15 in) woofer to the bottom enclosure housing two recoil-compensated 381 mm (15 in) woofers in a bass reflex enclosure – with a port opening towards the back of the enclosure.

The adjustable crossover frequencies enable the complete bass reproduction to be adapted depending on the loudspeaker location and listening location. This adaptation is done with the aid of the Genelec Loudspeaker Manager, during the system calibration, the bass output at the listening location is calculated by GLM and is optimised during the calibration process. This ensures flat low frequency output with minimizing the problems related to room resonances in the total system response. This creates a high output bass reproduction system with excellent precision.

Amplifiers

The 8381A system is a two-part design comprising top and bottom enclosures and two dedicated RAM-81 amplifier units. The amplifier units are 19-in 3U high rack mount enclosures, and each amplifier unit is factory calibrated to a unique enclosure and contains a serial number that matches with the enclosure input.

The power amplifiers in the RAM-81 produce 2600 W, 2400 W, and 926 W short-term power, respectively, for the three woofers, quad midranges, and coaxial driver midrange and tweeter combined. The total amplifier power is 5926 W. Both RAM-81 amplifiers are needed to power all drivers in the full 8381A system. The high power capacity ensures wide dynamic range and clean transient reproduction even for the most demanding audio signals.

Signal Processing

Digital signal processing in the RAM-81 amplifier unit is done with high precision algorithms. Each RAM-81 is factory-calibrated to a specific 8381A enclosure and is adapted by GLM management software for room acoustics to obtain neutral sound character. The signal processing includes driver and amplifier overload protection and ISS power saving for the highest efficiency and long-term system reliability. The room response compensations include highly flexible parametric filters, level alignment, acoustic delay compensation, and low frequency output adaptation. These allow accurate matching to all DAW output sections and room acoustics in the most demanding free-standing monitoring loudspeaker installations.

Accessory Kit

Each 8381A is delivered with the following accessory kit:

- Two mains cables (for amplifiers).
- For connecting the amplifiers to the enclosures: One cable sleeve to cover all cables, two 8-pole 'Speakon' cables and one RJ45 cable, each 5 m (20 ft).
- For interconnecting the two amplifier units: One RJ 45 cable, two XLR male-to-female cables, each 0.5 m (1.5 ft).
- For connecting bottom and top enclosures: One flat multipole cable 0.25 m (0.8 ft), one RJ45 cable 0.25 m (0.8 ft).
- Two sheet metal plates with screws for covering the enclosure interconnection areas in the top and bottom enclosures.
- Top enclosure incliner wedges, one 4 deg and one 8 deg (for downward angles 4 degrees and 8 degrees).
- Printed Quick Setup Guide

In addition, a Genelec Loudspeaker Manager (GLM) kit will be provided with each pair of 8381's. All except the incliner wedges are required to complete the 8381A monitor system setup. The incliner wedges are optional and should be used when the 8381A is installed such that the coaxial driver is higher than the listening level.

In addition to the accessories included with the 8381A, a height extension block 8381A-480 is available separately. The height extension block increases the height of the acoustic axis of 8381A by 300 mm (12 in). This height extension is suitable in situations where the monitoring is also done standing up or when the studio equipment layout requires the acoustic axis of the monitor to be high.

Installation Height and Axis Optimisation

The system default acoustic axis height optimally presents the sound image for a seated listener, but 8381A axis height can be optimised by placing the monitoring system on a pedestal. High acoustic axis placement can be useful when the furniture in the room prevents lower axis height from being used, to emulate traditional high main monitor placement or to have more equal presentation in a situation where the system is frequently auditioned standing up.

The 8381A system comes with two incliner wedge accessories to optimise the acoustic axis vertical aiming. One wedge accessory can be placed between the bottom enclosure and the top enclosure. The top enclosure tilt-down can be 4 or 8 degrees (see Figure 5). This allows optimal vertical alignment towards the listening location. Do not use both wedges at the same time or use them "backwards" to tilt the top enclosure upwards.

Operating Environment

Mains Power, Voltage, Frequency and Thermal Load

The 8381A monitoring system uses two RAM-81 amplifier units, each built in a standard 19-in 3U size rack-mount enclosure. Connect the amplifiers to mains outlets with safety ground (protective earth) terminal connections. The RAM-81 amplifier is compatible with a universal mains voltage input from 100-240 VAC with a mains frequencies 50-60 Hz, and always deliver full power despite the mains voltage level. The RAM-81 amplifiers contain turn-on surge reduction and power factor compensation, reducing the electrical system peak load.

Although the peak output power of the

amplifiers is about 6 kW, the mains power connection must be able to provide 2.2 kW of continuous power. The difference between the mains input power and peak output power is supplied by the amplifier power storage capacity.

When the 8381A is idle, the power consumption is about 140 W. This is also usually the thermal load of the 8381A as the thermal load is caused by the amplifier unit idle power consumption while extended playback at very high output level will increase the thermal load.

The RAM-81 amplifiers have a temperature controlled forced air cooling, and the fan rotation speed is normally very low and does not cause audible noise. However, if thermal load increases, the fan will run faster and cause some noise. For critical application and for maximum performance, Genelec recommends that the RAM-81 amplifier units are remoted into a separate space, in an air-conditioned equipment rack.

Operating and Storage Environment

The monitor enclosures and RAM-81 amplifiers are designed for indoor use only. The operating ambient temperature of the monitoring system is 15-35 °C (50-95 °F) and permissible non-condensing relative humidity between 20-80 %.

If the product has been stored or transported in cold and is then taken into a warm room, the product must warm up to ambient temperature inside unopened packing for at least three hours before opening the packing and connecting to the mains power.

As the enclosures are made of MDF medium fibre board, they should be protected from water or other liquids accumulating on the top of the enclosure or other surfaces. Prolonged exposure to liquids will affect the board.

Clearances Amplifier

A forced-air cooling system circulates air into the amplifier from behind, and air exits through openings on the right side. Free space around the amplifier must be sufficient to ventilate accumulating heat.

Place the amplifier so that at least 100 mm (4 in) free space is available behind the amplifier to allow for cable connections and air circulation and the perforated side of the amplifier should be open in the rack to allow air to flow – the rack sides must not block the openings in the amplifier.

If the amplifier overheats, it shuts down until a safe temperature is reached. When the amplifier is placed in a constrained environment, such as an equipment rack, there should be sufficient air conditioning inside the constrained space to maintain the ambient temperature below the maximum value.

Clearances Enclosure

Space of at least 50 mm (2 in) should be left behind and around the monitor enclosure because the bass reflex port in the lower enclosure opens to the back and clearance to the wall is needed to avoid reduction of bass output or increase of distortion.

Ensure that the speaker cables can reach the rear of the enclosure.

Mechanical Vibrations

If the flooring construction is light, the monitor can be mounted on vibration isolators to reduce mechanical resonances and vibrations in the floor and other structures. The mechanical resonant frequency of the monitor on the vibration mount should not be higher than 2–8 Hz for effective vibration isolation.

Installation

See Quick Setup Guide on pages 2-4.

Delivery on Pallet

The Genelec 8381A Smart Active Monitor is shipped in a plywood-covered pallet containing two enclosures, two individually calibrated RAM-81 amplifier units, and an accessory kit.

The monitor pallet is heavy; almost 200 kg (440 lb). It should be moved carefully using proper methods and a pallet truck.

The free opening in the door frame has to be more than 1 m (39 3/8 in) to allow the pallet to be taken into the room.

Before installing the system, check all items for damage and omissions. If damage is found, directly contact the dealer and insurance agent. If there are any missing components, contact your local dealer.

Opening and Accessing the Components

The packing crate is closed with screws. Place the create on the floor and remove the screws at the bottom of the crate using the correct screwdriver. Do not open at the top.

Once all screws at the bottom are removed, lift the complete covering box (top and sides) up and away as one unit. At least two persons are needed for this because of the size of the top.

Removing the complete covering box gives easy access to all the parts.

Remove the inclining wedges and the accessory box. Remove the amplifiers.

Assembling at Installation Location

If the coaxial unit of the 8381A must be higher than 1.2 m, place the necessary height extension pedestal on the floor. The necessary height extension must be supplied separately. An optional 300 mm (12 in) height extension block is available from Genelec. The pedestal must be able to support the full weight of the two enclosures, about 160 kg (350 lb). We recommend a mechanically robust pedestal material and construction to avoid any acoustic resonances in the pedestal and to be able to support the full weight of the monitor system.

Genelec recommends at least two persons for lifting and moving the individual loudspeaker enclosures. Please pay attention to the weight of each enclosure and note that hitting any objects while lifting and moving the enclosure can cause visible marks or even dents onto the enclosure surface and painting finish.

First lift the bottom enclosure out and place it to the final installation location. At least two persons are needed for this. To lift the unit, hands must go under the unit. The cushioning has openings to allows this. Note that the unit is heavy, more than 70 kg (155 lb).

If necessary, place the inclining wedge on the bottom unit at this time. When the designed coaxial driver height is more than 1.2 m or if the listening position is much lower than 1.2 m from the floor, install the correct incliner wedge to direct the acoustic axis towards the listening position (see Figure 5). Attach the wedge to the bottom enclosure with four M4x10 Torx bolts provided in the accessories package.

Lift the top enclosure out and place it on top of the bottom enclosure (or incliner wedge, if used). At least two persons are needed for this. To lift the unit, hands must go under the unit. The cushioning has openings to allows this. Note that the unit is

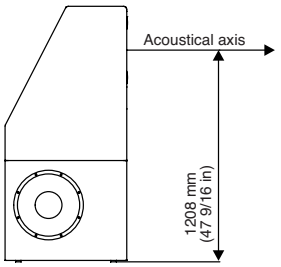

Figure 4. Height of the acoustical axis. Horizontally the axis is located at the centreline of the enclosure

heavy, more than 70 kg (155 lb).

The top enclosure DCW area is covered by a plastic protection sheet. Do not remove this until the enclosure is fully assembled in its intended location and do not apply any pressure on it as this may damage the 5 in midrange domes. Remove the protection sheet attaching tapes carefully to avoid marks in the paintwork. Store the protective sheet for possible later use if the top enclosure has to be moved.

Note: The top enclosure must be placed on top of the bottom enclosure to get the designed acoustic characteristics and frequency response quality. Genelec does not recommend the top enclosure to be placed away from the bottom enclosure and does not support such placements.

Warning: Do not apply pressure on the 5 in domes in the DCW area. Avoid touching the domes. Structural changes in the domes may affect the sound quality.

Placement and Aiming

The 8381A monitor is designed to be placed free-standing on the floor. The monitor has point source characteristics down to 200 Hz. Because of this the listening distance can be chosen quite freely – down to a listening distance of around 1 m (3 ft). The automatic calibration system with the adaptive woofer system allows excellent performance in free-standing positions, away from room walls. These characteristics together allow the monitor to be placed at the ideal loudspeaker locations for monitoring in the room.

Acoustic Axis Definition

The monitor acoustic axis is at the centre of the coaxial driver. This axis from the middle of the coaxial driver should point at the listener. This is also the measuring axis of the system (see Figure 4).

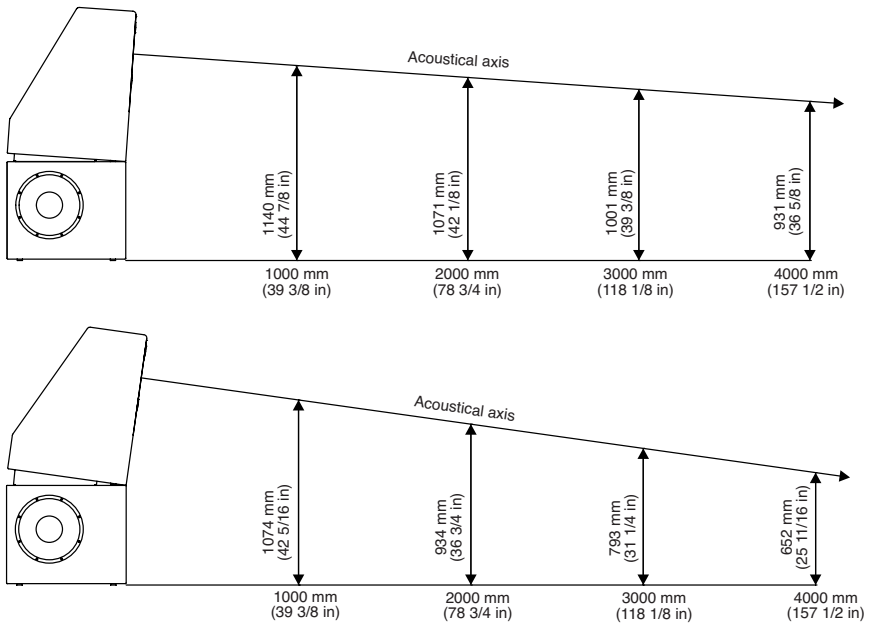

Figure 5. Height of the acoustical axis using the 4 deg (above) and 8 deg (below) incliner wedges. Do not use the wedges to tilt the top enclosure upwards

Selecting the Installation Height

Consider the need of lifting up the 8381A if you have high furniture such as the mixing console, to give the mid and high frequency drivers enough clearance over the tops of the furniture. An optional 0.3 m (1 ft) pedestal is available from Genelec for this.

Aiming the Acoustic Axis

The monitor should be aimed horizontally and vertically toward the listener.

When the monitor is placed on the floor, the acoustic axis height is 1.2 m. When listening at the typical sitting height (1.2 m), no vertical alignment is needed. In applications where the monitoring is frequently done standing up, axis direction should be adjusted vertically to midway between the standing and seated positions, typically 1.5 m (5 ft from the floor), allowing similar frequency response for standing and seated listening positions.

Acoustic Axis Optimisation When Monitor is Lifted

When the monitor is lifted on a pedestal, the top enclosure can be tilted towards the listener. For a typical seating height, this normally means the top enclosure acoustic axis is pointing slightly down. This can be achieved by tilting the top enclosure slightly forward using an incliner wedge, to achieve either a 4 or 8 degree tilt-down angle. These wedges are included with the 8381A. The wedges are marked with the tilt angle.

Genelec does not recommend using any other method for tilting the top enclosure as the wedges are designed to create structural rigidity and ensure that the enclosure stack has maximum stability when tilted.

See Figure 5 for the acoustic axis height at different distaces when using the tilt wedges.

Connections

Enclosure to Enclosure Cabling

Locate the covering plates at the top of the bottom enclosure and the bottom of the top enclosure – these are included in the Accessories Kit.

Locate and connect the 0.25 m (0.8 ft) flat cable and 0.25 m (0.8 ft) RJ45 cables between the top and bottom enclosures. These cables are provided in the Accessories Kit.

After cables are in place, attach the covering plates using the included screws.

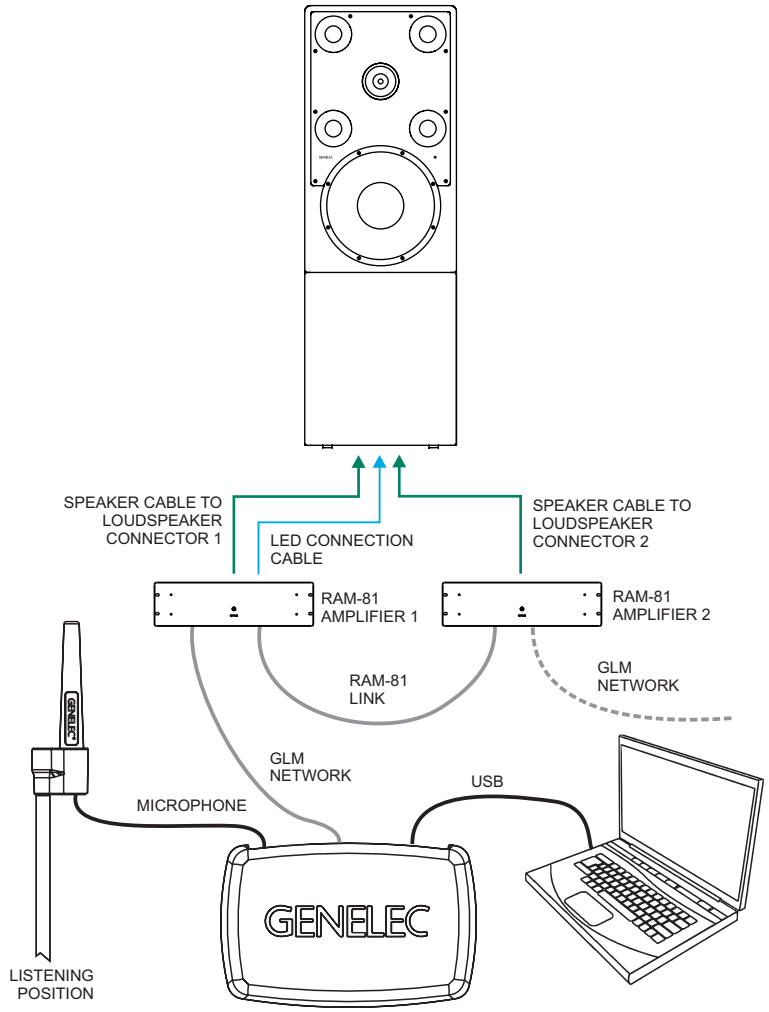

Figure 6. GLM control network cabling, speaker cables and LED connecting cable



Figure 7. Connector panel on the bottom enclosure

Cable gauge	Max. cable length
2.0 mm² (14 AWG)	Up to 10 m (100 ft)
3.3 mm² (12 AWG)	30 - 40 m (100-130 ft)
5.3 mm² (10 AWG)	40 - 60 m (130 - 200 ft)

Table 1. Recommended minimum cable gauges fot different speaker cable lengths



Figure 8. Back panel pf the 8381A with enclosure to enclosure cables and covering plates installed

Do not exceed 1 Nm (0.7 ft lb) torque.

Now 8381A enclosure is ready for attaching the cabling to the amplifier system.

Amplifier to Enclosure Cable Assembly

The cable assembly is designed to go between the two amplifiers and the bottom monitor enclosure. Each amplifier is marked next to the loudspeaker connector. The amplifier marked as '1' must be connected to the enclosure input 1 and amplifier marked as '2' must be connected to enclosure input 2.

The cables also indicate the markings ‘1’ and ‘2’. Match the markings in the cables to the marking on the amplifier and the enclosure input terminal.

If you need a custom cable length between the amplifiers and the enclosure, please contact Genelec for availability of custom cable assemblies.

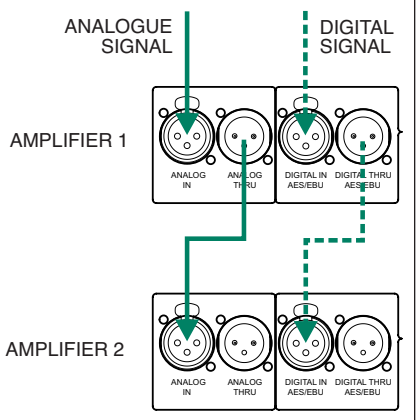

Figure 9. Connecting audio input using analogue audio (solid line) or alternatively using AES/EBU audio (dashed) inputs and thru outs

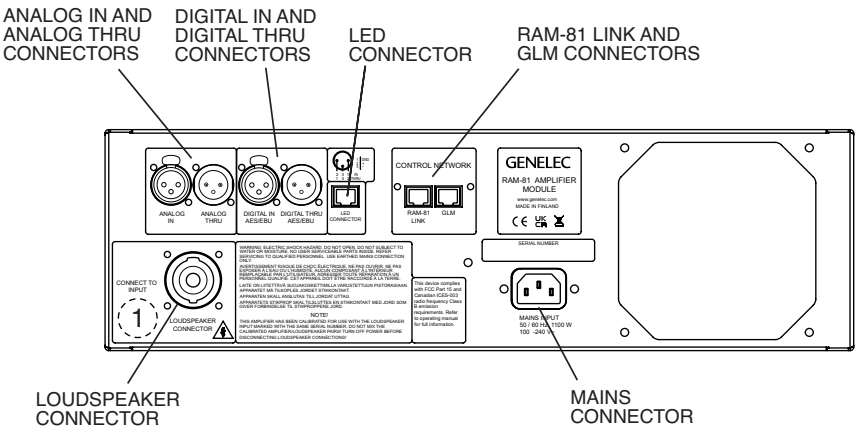

Figure 10. RAM-81 amplifier connector panel. Amplifier 1 shown, amplifier 2 has similar layout. However, the amplifiers are not interchangeable

You may also build your own interconnecting cable assembly. For this, connect the eight-pin 'Speakon' connectors pin-to-pin using at least the cable gauge given in Table 1. The cable gauge depends on the length of the cable. Pin-to-pin connection means that pin number 1 in the first Speakon connector is connected to pin number 1 in the second Speakon connector, and so on.

As the RAM-81 amplifiers can produce potentially hazardous voltages, use a trained electrical technician to build and connect the custom Speakon cables to ensure safety and compliance with local regulations.

Standard CAT 5 or CAT 6 cables can be used for the RJ-45 interconnection between the amplifiers and the enclosure, and different lengths are available in stores selling CAT cables. Do not use special CAT cables with crossed interconnections or cables that do not have all pins connected.

RAM-81 LINK Amplifier Communication Cable

The two amplifiers communicate using one interconnecting control network cable. This link interface is named 'RAM-81 LINK'. This cable is provided.

The GLM network cable is connected to Amplifier Unit 1 and, if needed, continued to further Genelec SAM monitors using the GLM output on Amplifier Unit 2. See Figure 6.

Audio Cabling

The incoming audio signal(s) are connected to Amplifier Unit 1. The THRU out is connected to the input of Amplifier Unit 2. XLR male-to-female cables are provided for this. See Figure 9.

System Calibration

GLM software can fully set up your Genelec Smart Active (SAM) Monitoring system. GLM software works with SAM monitors to minimise the unwanted acoustic influences of the monitoring room and helps your mixes sound great, everywhere. Among other new features, GLM system calibration includes the optional GRADE Report, extending GLM's scope beyond ultra-precise system calibration, to complete in-depth room and system acoustical analysis.

Connecting GLM Network

In order to use the setup software, the GLM Network must be connected (see Figure 6):

- Link Amplifier 1 and Amplifier 2 using the supplied CAT5 (RJ45) cable. Connect the cable between the RAM-81 LINK connectors on both amplifiers.
- Link all monitors and subwoofers in a daisy-chain manner by connecting CAT5 (RJ45) cables to the 'CONTROL NETWORK' connectors of all the Genelec SAM monitors and RAM amplifiers. The order connection in the daisy-chain is not important.
- Run the final network cable to GLM network input in the GLM Adapter device.
- Connect the GLM Adapter device to the USB connector on your computer.

Measurement Microphone Placement

Place the Genelec measurement microphone on a stand at the listening location of the engineer, with the microphone pointing upwards and the microphone top at the height of the engineer's ear at the position where the engineer would normally work. The microphone is a part of the GLM User Kit. Run the microphone cable into the microphone input of the GLM Adapter device.

In case of a multi-point calibration, several microphone positions are used. Consult the GLM Operating Manual for further instructions.

Installing and Using GLM Software

Download GLM software at the Genelec web site (www.genelec.com). Install the GLM software. The software comes with an operating manual explaining the process of calibrating the monitoring system. Follow the GLM software instructions to measure and set up your monitors. You can choose to calibrate for one listening position or for a wider listening area, using multiple measurement microphone positions. GLM software can calibrate any SAM monitoring system up to tens of monitors

and subwoofers in one room, including very high channel count immersive systems. For more information, latest downloads and documentation, see https://www.genelec.com/glm.

Storing Settings in Amplifiers

If you plan not to use a computer for controlling the monitors after the calibration, use GLM software to write the settings into the monitors ('Store the Settings').

One of these settings is the volume setting applied inside the monitor which should be optimised for the audio source level adjustment. The following two points are guidelines for selecting the optimal volume setting for the stand-alone use of the monitor.

Analogue Audio Level

The sensitivity of the monitor system can be adjusted using GLM software. It is advantageous to keep the incoming signal level high and to lower the level in the monitor using the GLM level control to maintain the highest digital resolution. Frequently the best overall signal-to-noise ratio can be obtained when the GLM volume setting is set to -10 to -15 dB when the analogue input is controlled in the mixing console.

AES/EBU Audio Level

For a digital –30 dBFS input, the 8381A produces 100 dB of sound level (SPL) at 1 meter in free space when the volume is set to the maximum (0 dB). The sensitivity of the monitor system can be adjusted by the volume setting in the GLM software. It is advantageous to keep the incoming signal level high and to lower the level in the monitor using the GLM level control to maintain the highest digital resolution.

RAM-81 Amplifier

Amplifiers for the Top and Bottom Enclosures

The 8381A monitor includes two RAM-81 amplifiers. Each amplifier comes from the factory with a unique calibration that is specific to a certain enclosure of the 8381A. Please observe the match of the RAM-81 serial number with the serial number marked next to the amplifier connector in the lower enclosure to ensure correct connections.

Connectors on the RAM-81

The 'MAINS INPUT' Connector: Connects to a mains supply of 100-240 VAC and 50-60 Hz.

'DIGITAL IN AES/EBU' Connector: The monitor defaults to reproducing an analogue input signal. The digital audio AES/EBU input is selected automatically when a valid digital audio signal is presented. Use GLM software to define the AES/EBU subframe to monitor.

The digital input is set at the factory to the highest sensitivity, resulting in a sound output of 130 dB SPL for a 0 dBFS digital input signal. This sensitivity can be adjusted using GLM software.

'DIGITAL THRU AES/EBU' Connector: This output carries an unaltered copy of the digital audio signal and can be used for daisy-chaining the signal to up to three additional SAM monitors or subwoofers.

'ANALOG IN' Connector: The maximum input level of the analogue input is +24 dBu. The analogue input must not be overloaded, otherwise distortion will result. When the maximum input is exceeded, the enclosure front panel light turns red, indicating the overload.

The sensitivity of the monitor system is set using GLM software. The analogue input is set at the factory to the highest sensitivity, resulting in a sound output of 100 dB SPL for a -6 dBu analogue input signal. This sensitivity can be adjusted using GLM software.

'CONTROL NETWORK' Connectors: The RJ45 sockets connect the monitor to the proprietary Genelec Loudspeaker Manager™ (GLM™) network. Do not connect to Ethernet LAN.

'Loudspeaker Connectors' Group, 'LED' Connector: This RJ45 socket is connected to the bottom enclosure to drive the front panel warning LED. Connect the LED cable to RAM-81 marked as ‘1’.

'SPEAKER' Connector: Takes an eight-pole 'Speakon' cable. The 8381A monitor uses two RAM-81 amplifiers, both connecting to the bottom enclosure of the monitor. On the GLM network, both amplifiers appear as one 8381A monitor. CAUTION! The 'SPEAKER' connectors on the RAM-81 amplifiers can output hazardously high voltages. To ensure electrical safety, unless the included cable assembly is used, the enclosure wiring must be installed by a qualified and trained person.

LED Indications on the Enclosure

The 8381A enclosure has an LED indicator light in the waveguide area.

Steady green light indicates that all systems are working normally.

A red light is shown when the 8381A system protection activates. It is possible that the sound output changes and does not have the designed quality and characteristics. This can be corrected by reducing the output level or the level of input to the 8381A. Genelec does not recommend the 8381A to be operated such that the red light is blinking or is steadily on as this may mean that the acoustic output quality level may be reduced and judgements on the audio character and quality may not be accurate.

The red overload light can be activated by several events:

- Exceeding the maximum input of the analogue input (analogue input clipping).
- Reaching very close to the digital input maximum (likelihood of digital clipping).
- Overload of drivers or amplifier.
- Clipping in the power amplifier.
- Error detected in AES/EBU audio data.
- Mute function is on

A yellow light is shown when the 8381A is handled by GLM software or is not part of the currently playing GLM Group. This is normal and indicates the state of 8381A in the GLM management network. This does not reduce or change the output sound quality.

The light turns red in an overload or error condition. If a red warning light appears on the monitor at high output levels, turn the source level down. If the red warning light turns on at low output level, ensure that there are no bit errors in the AES/EBU digital audio and check the volume setting as low volume setting can allow the input to clip early.

Power Button Indications

When the amplifier is turning on the power button light flashes rapidly.

After the amplifier power up correctly, the lights glows steadily after the turn-on has been completed. This is the normal indication.

When powering up the amplifier, if the Power Button continues to flash, this may indicate that the amplifier to monitor enclosure cabling is not correctly connected. Check the cabling, power down the amplifier and power up the amplifier again to see if the flashing is resolved.

Resetting the Amplifier

Settings can be permanently stored into the RAM-81 amplifiers. These settings will automatically be applied when the amplifier turns on unless the GLM network is connected and the GLM software is running.

To reset the RAM-81 amplifier settings to the factory defaults, turn on the amplifiers. After the amplifier is on, continuously press the power button on each amplifier for at least 10 seconds. The amplifier will indicate this by starting to beep. Release the button and the restoration of factory defaults begins.

After the factory reset, no room-related settings exist in the RAM-81 amplifiers and the input sensitivity is restored to the factory default settings.

ISS™ Settings and Energy Saving

GLM software can power down and power up all the monitors.

GLM software can also be configured to automatically power down and up the monitoring system when the GLM software exists or is started again in the computer. Genelec recommends GLM software management.

The Intelligent Signal Sensing™ (ISS™) is an automatic energy saving features inside each monitor and can automatically put the monitor into a power-saving stand-by mode.

The factory setting for ISS is 'OFF', where the monitor never enters the power save mode. ISS can be activated and configured using GLM software (see Figure 5). The ISS setting is shared by all ISS-enabled monitors in the currently selected GLM Setup.

When ISS is active, if no audio signal is sensed during the selected time, the monitor powers down. The monitor powers up again once a signal is detected. AES digital audio is sensed even if the content of audio is total silence. To enable ISS with a digital audio input, the AES connection to the monitor must stop transmitting. When the AES data is zero and the channel is silent, this does not activate the ISS.

Maintenance

Periodically check that the protective grilles on the cooling fans of the RAM-81 amplifiers. Clean them gently with a vacuum cleaner, if necessary. Increased fan noise can indicate reduced air circulation and the need for cleaning. In an extreme condition, the amplifier may automatically shut down to cool.

Safety Warnings

The 8381A monitor is capable of playing sound levels significantly in excess of 100 dB SPL. The monitor may cause traumatic and permanent hearing damage from even a single, short duration incident. Precautions must be taken to prevent unwanted or accidental excessive sound levels, and hearing protection should be always worn when working in the vicinity of a powered system.

Genelec recommends that the sound exposure of the personnel operating the 8381A system does not exceed the limits set out in the noise at work directive by the European Commission, Directive 2003/10/EC. In case local requirements are more conservative, the more conservative limits should be observed.

Although 8381A has been designed in accordance with international safety standards, to ensure safe operation and to maintain the monitor under safe operating conditions, the following warnings and precautions must be observed:

- Servicing and adjustment must only be performed by a certified Genelec service. The monitor enclosure or the RAM-81 amplifier unit must not be opened as this may result in loss of accurate acoustic calibration.
- Do not use this product with an unearthed mains cable or a mains connection without the protective earth contact as this may lead to personal injury.
- To prevent fire or electric shock, do not expose any part of the product to water or moisture.
- Do not place any objects filled with liquid, such as vases on or near any part of the product.
- The 'SPEAKER' connectors on the RAM-81 amplifiers can output hazardously high voltages. To ensure safety, the wiring connected to these connectors must be installed by a qualified and trained person, unless the included wiring assembly is used.
- Note that the amplifier is not completely disconnected from the AC mains service unless the mains power cord is removed from the amplifier or the mains outlet. Easy access to either end of the power cord must be ensured at all times.
- Observe the minimum clearances. Sufficient clearances, free flow of air around the RAM-81 amplifier as defined in chapter 'Operating Environment' and maintaining the ambient temperature within limits are necessary to maintain sufficient cooling.

Symbols


WEEE Directive 2012/19/EU


Power/standby switch


IEC 60417-6044 symbol

Compliance to FCC Rules

This device complies with part 15 of the FCC Rules. Operation is subject to the following two conditions:

- This device may not cause harmful interference, and
- This device must accept any interference received, including interference that may cause undesired operation.

Note: This equipment has been tested and found to comply with the limits for a Class B digital device, pursuant to part 15 of the FCC Rules. These limits are designed to provide reasonable protection against harmful interference in a residential installation. This equipment generates, uses and can radiate radio frequency energy and, if not installed and used in accordance with the instructions, may cause harmful interference to radio communications. However, there is no guarantee that interference will not occur in a particular installation. If this equipment does cause harmful interference to radio or television reception, which can

be determined by turning the equipment off and on, the user is encouraged to try to correct the interference by one or more of the following measures:

- Reorient or relocate the receiving antenna.
- Increase the separation between the equipment and receiver.
- Connect the equipment into an outlet on a circuit different from that to which the receiver is connected.
- Consult the dealer or an experienced radio/TV technician for help.

Modifications not expressly approved by the manufacturer could void the user's authority to operate the equipment under FCC rules.

Warranty

This product is warranted for a period of two year, and ten years once the customer registers the product at Genelec web portal. The warranty covers faults in materials or workmanship. The warranty period can be extended registering the product at www.genelec.com. Refer to your supplier for full sales and warranty terms in your region.

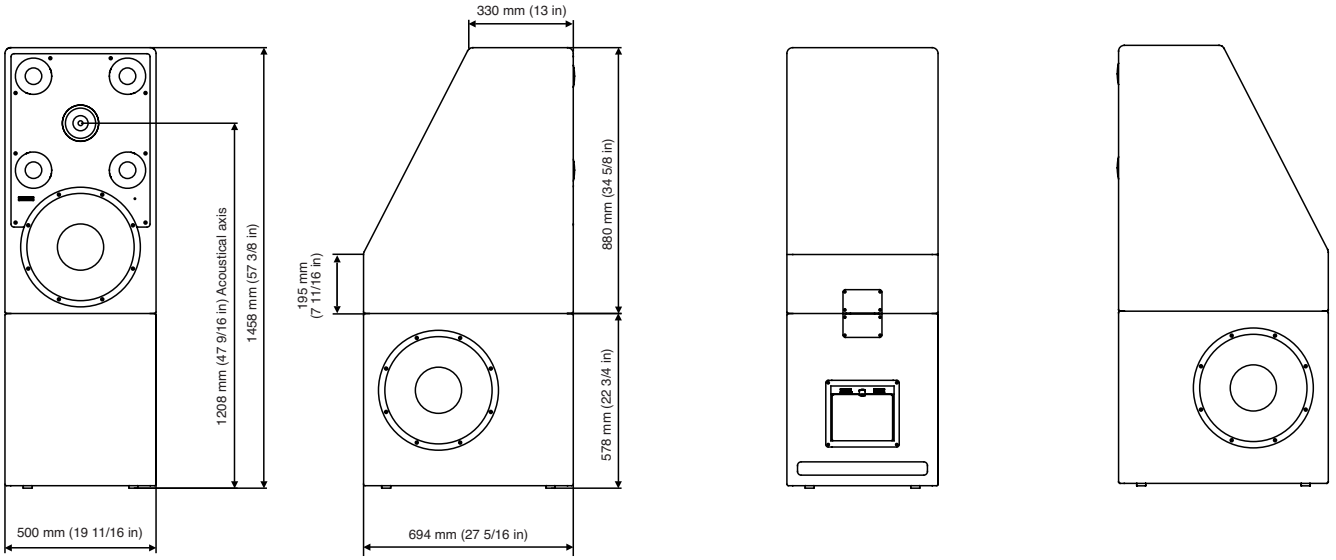

Figure 11. Dimensions of the 8381A enclosure

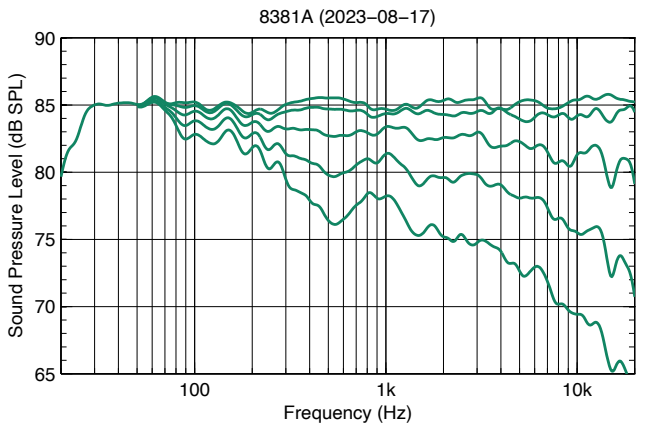

Figure 12. Horizontal directivity characteristics of the 8381A.

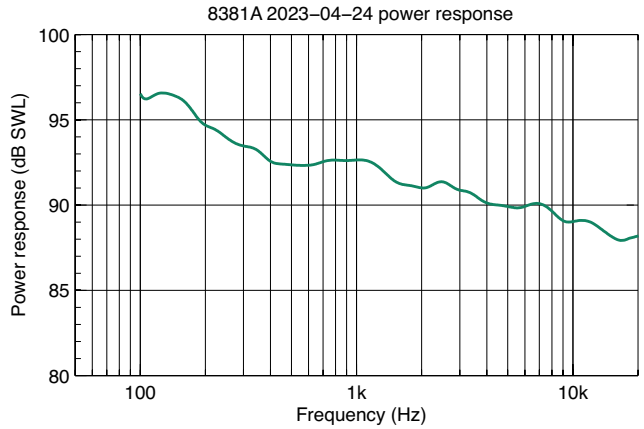

Figure 13. The monitor's power response.

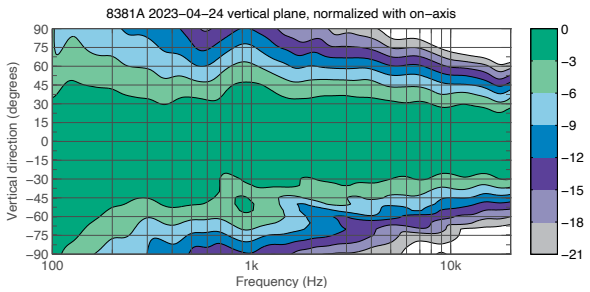

Figure 14. Vertical directivity characteristics of the 8381A.

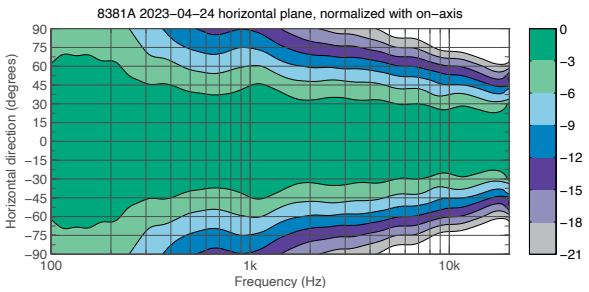

Figure 15. Horizontal directivity characteristics of the 8381A.

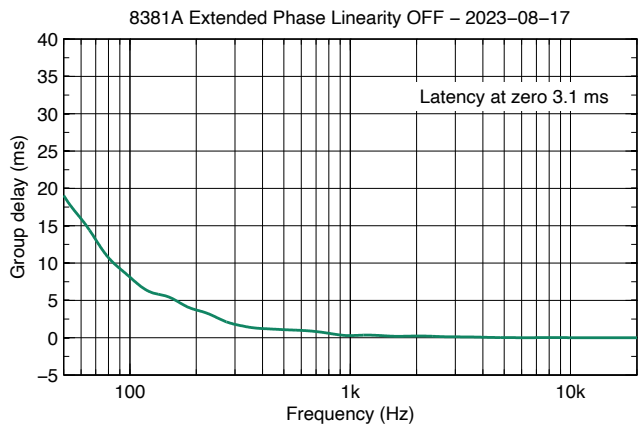

Figure 16. The delay variation of the 8381A as a function of frequency with Extended Phase Linearity function OFF

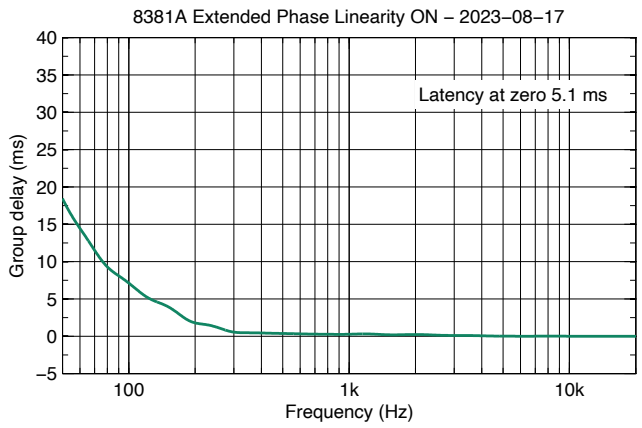

Figure 17. The delay variation of the 8381A as a function of frequency with Extended Phase Linearity function ON

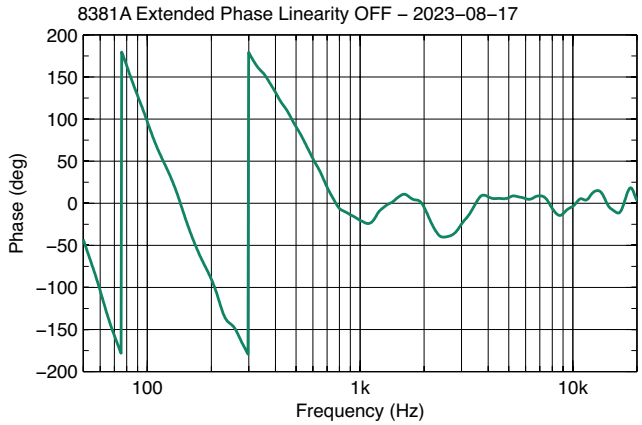

Figure 18. The phase response of the 8381A as a function of frequency with Extended Phase Linearity function OFF

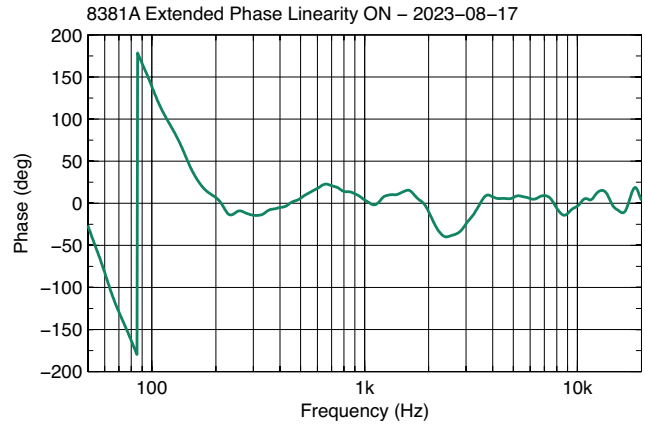

Figure 19. The phase response of the 8381A as a function of frequency with Extended Phase Linearity function ON

SYSTEM SPECIFICATIONS

	8381A
Lower cut-off frequency, –6 dB	≤ 20 Hz
Upper cut-off frequency, –6 dB	≥ 35 kHz
Accuracy of frequency response, ± 1.5 dB	30 Hz – 20 kHz
Maximum short term sine wave acoustic output on axis in half space, averaged from 100 Hz to 3 kHz at 1 m	126 dB SPL
Maximum long term RMS acoustic output in the same conditions with IEC weighted noise (limited by driver protection circuit) at 1 m	121 dB SPL
Maximum peak acoustic output per pair in a listening room with music material at 2 m	132 dB SPL
Self generated noise level in free space	
At 1 m on axis with analog input and -10 dB level (A-weighted)	< 1 dB SPL
At 10 cm on axis with analog input and -10 dB level (A-weighted)	< 17 dB SPL
Harmonic distortion at 100 dB SPL at 1 m on axis	
Freq: 50…2300 Hz	< 0.5 %
> 2.3 kHz	< 1.4 %
Drivers	
Low Woofer	2 x 380 mm (15 in) cone
Higher Woofer	1 x 380 mm (15 in) cone
Lower Midrange System	4 x 125 mm (5 in) dome
Coaxial Midrange	1 x 125 mm (5 in) cone
Coaxial Tweeter	Compression tweeter with 25 mm voice coil and 13 mm (1/2 in) exit
Monitor enclosure weight 1 (top) + 2 (bottom)	69 + 71 kg (152 + 156 lb) total 140 kg (308 lb)
Amplifier weight (1 + 2)	11 + 11 kg (24 + 24 lb) total 22 kg (48 lb)
Monitor enclosure 1 (top) dimensions	
Height	880 mm ($34^{5}/_{8}$ in)
Width	694 mm ($27^{5}/_{16}$ in)
Depth	500 mm ($19^{11}/_{16}$ in)
Monitor enclosure 2 (bottom) dimensions	
Height	578 mm ($22^{3}/_{4}$ in)
Width	694 mm ($27^{5}/_{16}$ in)
Depth	500 mm ($19^{11}/_{16}$ in)
Amplifier dimensions (both 1 and 2)	
Height	3U 132 mm ($5^{3}/_{16}$ in)
Width (front plate)	483 mm (19 in)
Width (casing)	425 mm ($16^{3}/_{4}$ in)
Depth	345 mm ($13^{5}/_{8}$ in)

AMPLIFIER SECTION

	8381A
RAM-81 Amplifier 1 short term power output	
Lower midrange amplifier 1 (2 x 5 in + 2 x 5 in)	1200 + 1200 W
Coaxial midrange amplifier	620 W
Coaxial tweeter amplifier	306 W
RAM-81 Amplifier 2 short term power output	
Bass amplifier 1 (2 x 15 in lower enclosure)	2 x 700 W
Bass amplifier 2 (1 x 15 in top enclosure)	700 W
Long term output power is limited by driver protection circuitry	
Amplifier system THD at nominal output	< 0.02 %
Signal to Noise ratio, referred to full output	
Bass	> 115 dB
Midrange	> 120 dB
Tweeter	> 120 dB
Mains voltage	100-240 VAC 50/60 Hz
Power consumption	
Standby ISS active	< 0.7 + 0.7 W
Idle	70 + 70 W
Full output, long term	1100 + 1100 W
Full output, peak	2400 + 2400 W

SIGNAL PROCESSING SECTION

	8381A
Analog signal input connector XLR female, balanced 10 kOhm	pin 1 gnd, pin 2 non-inverting, pin 3 inverting
Analog signal output / Thru connector XLR male balanced 10 kOhm	pin 1 gnd, pin 2 non-inverting, pin 3 inverting
Maximum analog input signal	+24.0 dBu
Analog input sensitivity (100 dB SPL at 1 m)	-6 dBu
Digital signal input connector XLR female 110 Ohm	AES/EBU
Digital signal output / Thru connector XLR male 110 Ohm	AES/EBU
Digital audio input	
Word length	16 - 24 bits
Sample rate	32 - 192 kHz
Digital input sensitivity (100 dB SPL at 1 m)	-30 dBFS
Control network	
Type	Proprietary GLM™ network
Connection	2 RJ45, CAT5 cables
Crossover frequency	
Lowe Woofer/Higher Woofer	60 - 130 Hz (variable)*
Higher Woofer/Lower Midrange System	150 - 250 Hz (variable)*
Lower Midrange System/Coaxial Midrange	500 Hz
Coaxial Midrange/Tweeter	1900 Hz
GLM™ software frequency response adjustment	
Parametric notch filters	16
Shelving filters	2 LF and 2 HF
System calibration	Genelec GLM AutoCal™ Genelec WooferCal™

*Variable crossover frequensies are optimised by GLM AutoCal and WooferCal based on room acoustics

8381A Operating Manual

Genelec Document D0190R001 Copyright Genelec Oy 8.2023. All data subject to change without prior notice

www.genelec.com

GENELEC®

International enquiries:
Genelec, Olvitie 5
FIN-74100, Iisalmi, Finland
Phone +358 17 83881
Fax +358 17 812 267
Email genelec@genelec.com

In the U.S. please contact:
Genelec, Inc., 7 Tech Circle
Natick, MA 01760, USA
Phone +1 508 652 0900
Fax +1 508 652 0909
Email genelec.usa@genelec.com

In China please contact:
Beijing Genelec Audio Co.Ltd
Room 101, Building B33,
Universal Business Park,
No.10 Jiuxianqiao Road,
Chaoyang District,
100015 Beijing, China
Phone +86 (10) 5823 2014
+86 400 700 1978
Email genelec.china@genelec.com

In Japan, please contact:
Genelec Japan Inc.
2-22-21 Akasaka, Minato-ku
07-0052, Tokyo
Phone +81-3-6441-0591
genelec.japan@genelec.com
Email genelec.japan@genelec.com

In Sweden please contact
Genelec Sverige
Tureholmsvägen 12
125 35 Älvsjö
Sweden
Phone +46 8 449 5220
Email sweden@genelec.com