JMAZ®



MAD PAR 4IP

User Manual

© **2024 JMAZ GROUP, INC.** All rights reserved. The information, specifications, diagrams, images, and instructions provided in this document are subject to change without prior notice. The JMAZ GROUP, INC. logo, as well as the product names and numbers mentioned, are trademarks of JMAZ GROUP, INC. Copyright protection extends to all forms and types of copyrightable materials and information, both currently recognized by law and any future extensions. All product names mentioned may be trademarks or registered trademarks of their respective companies and are acknowledged accordingly. Trademarks and registered trademarks of non-JMAZ GROUP, INC. brands are the property of their respective owners.

JMAZ GROUP, INC. and its affiliated companies disclaim any and all liability for property, equipment, building, and electrical damages, injuries to individuals, and any direct or indirect economic loss resulting from the use or reliance on any information contained in this document. This includes damages resulting from improper, unsafe, inadequate, or negligent assembly, installation, rigging, or operation of this product.

DOCUMENT VERSION

This document may be updated online to include new product features or enhancements. For the most recent version of this manual, please visit www.jmazlighting.com before starting installation or programming.

Date	Document Version	DMX Channels	Notes
10/01/2024	1.0	5/6/8/16	Initial Release

Europe Energy Saving Notice

Energy Saving Matters (EuP 2009/125/EC)
Conserving electrical energy is crucial for environmental protection. Please turn off all electrical products when they are not in use. To prevent power consumption in idle mode, disconnect all electrical equipment from the power source when not in use. Thank you!

JMAZ®

Table of Contents

3 – Introduction
4 – Safety Instructions
5 – Warranty Information
7 – FCC Statement
8 – Power / Battery Information
9 – IP65 Disclaimer
11 – Safety Precautions
14 – Specifications
15 – Box Contents
16 – Photometrics
17 – Installation Guidelines
20 – Control panel
21 – System Menu
24 – IR Remote
31 – Wireless DMX Settings
33 – Standalone Setup
39 – DMX Chart
56 – CAD Drawings
57 – Maintenance Guidelines

RoHS CE

Retain This Manual for Future Reference

Introduction

Unpacking: Thank you for purchasing the MAD PAR 4IP by JMAZ. Every device has been thoroughly tested and shipped in perfect operating condition. Please carefully inspect the shipping carton for any damage that may have occurred during transit. If the carton appears damaged, inspect the fixture for any signs of damage and ensure all necessary accessories are intact. If any damage is found or parts are missing, contact our toll-free customer support number for further instructions. Do not return the unit to your dealer without first contacting customer support.

This product is intended for use by professionally trained personnel only and is not suitable for private use.

Customer Support

For any product-related service and support needs, please contact JMAZ Customer Service. Visit www.jmazlighting.com for questions, comments, or suggestions.

JMAZ GROUP, INC

Monday - Friday, 8:30 am to 5:00 pm PST

Phone: 626-380-0883 | Fax: 626-866-8868

Email: support@jmazlighting.com

Address: 2422 Lee Ave, South El Monte, CA 91733

JMAZ®

IMPORTANT SAFETY INSTRUCTIONS
READ AND FOLLOW ALL SAFETY INSTRUCTIONS

Lighted lamp is HOT!

WARNING – To reduce the risk of FIRE OR INJURY

CAUTION – Use indoors only.

CAUTION – Risk of Electric Shock

CAUTION –Hot surface. Keep away from curtains and other combustible materials.

Turn off the power and allow to cool before replacing lamp.

The lamp gets HOT quickly! Contact only switch/plug when turning on.

Do not touch hot lens, guard, or enclosure

Keep lamp away from materials that may burn.

Do not touch the lamp at any time. Use a soft cloth. Oil from the skin may damage the lamp.

Do not operate the luminaire with a missing or damaged shield.

Do not use if there is any damage to the light or cord insulation. Inspect periodically.

CONSULT A QUALIFIED ELECTRICIAN TO ENSURE CORRECT BRANCH CIRCUIT CONDUCTOR

This portable luminaire has a polarized plug (one blade is wider than the other) as a feature to reduce the risk of electric shock. This plug will fit in a polarized outlet only one way. If the plug does not fit fully in the outlet, reverse the plug. If it still does not fit, contact a qualified electrician. Never use with an extension cord unless plug can be fully inserted. Do not alter the plug.

SAVE THESE INSTRUCTIONS

CAUTION! Do NOT expose the fixture or front lens opening to direct sunlight, other lighting, moving head fixtures, or lasers during unpacking, installation, use, or extended idle periods outdoors. Additionally, do not focus a light beam from one fixture directly at another.

CAUTION! To avoid the risk of shock or fire, do NOT expose this unit to rain or moisture.

CAUTION! There are no user-serviceable parts inside this unit. Attempting repairs yourself will void the manufacturer's warranty. If your unit requires service, please contact JMAZ Group, INC.

CAUTION! Do not discard the shipping carton in the trash; please recycle whenever possible.

MANUFACTURER'S LIMITED WARRANTY PERIODS:

A. Lighting Products (Non-LED): 1 Year (365 Days) Limited Warranty (ex: Special Effect Lighting, Intelligent Lighting, UV Lighting, Strobes, Fog Machines, Bubble Machines, Mirror Balls, Par Cans, Trussing, Lighting Stands, etc.)
B. Lighting Products (LED and Lamp): 2 Year (1095 Days) Limited Warranty (ex: LED Moving Heads, OSRAM Bulb Moving Heads, Laser Products.)
C. Batteries: 6 Months (180 Days) Limited Warranty (ex: Lithium-Ion Batteries)
D. Non-LED Bulbs: 6 Months (180 Days) or 2,000 hours of Run time (whichever comes first.) (ex: OSRAM bulbs)

MANUFACTURER'S LIMITED WARRANTY

A. JMAZ Group, Inc., hereby warrants, to the original purchaser, JMAZ products to be free of manufacturing defects in material and workmanship for a prescribed period from the date of purchase. This warranty shall be valid only if the product is purchased within the United States of America, including possessions and territories. It is the owner's responsibility to establish the date and place of purchase by acceptable evidence at the time service is sought out.
B. For warranty service, you must obtain a Return Merchandise Authorization Number (RMA#) before sending back the products – Please contact JMAZ at support@jmazlighting.com. Send the product only to the JMAZ Headquarter. All shipping charges must be Pre - Paid. If the requested repairs or service (including parts replacement) are within the terms of this warranty, JMAZ will pay return shipping charges only to a designated point within the United States of America. If the entire instrument is sent, it must be shipped in its original package. No accessories should be shipped with the product. If any accessories are shipped, JMAZ shall have no liability whatsoever for loss of or damage to any such accessories, not for the safe return thereof.
C. This warranty is void if the serial number has been altered or removed; if the

product is modified in any manner which JMAZ concluded, after inspection, affects the reliability of the product; if the product has been repaired or serviced by anyone other than the JMAZ factory unless prior written authorization was issued to purchaser by JMAZ; if the product is damaged because of improper maintenance as set forth in the instruction manual.

D. This is not a service contract, and this warranty does not include maintenance, cleaning, or periodic checkup. During the period specified above, JMAZ will replace defective parts at its expense with new or refurbished parts and will absorb all expenses for warranty service and repair labor by reason of defects in material or workmanship. The sole responsibility of JMAZ under this warranty shall be limited to the repair of the product, or replacement thereof, including parts, as the sole discretion of JMAZ.
E. JMAZ reserves the right to make changes in design and/or improvements to its products without any obligation to include these changes in any products theretofore manufactured.

F. No warranty, whether expressed or implied, is given or made with respect to any accessory supplied with the products described above. Except to the extent prohibited by applicable law, all implied warranties made by JMAZ in connection with this product, including warranties of merchantability or fitness, are limited in duration to the warranty period set forth above. No warranties, whether expressed or implied, including warranties of merchantability or fitness, shall apply to this product after said period has expired. The consumer’s and/or Dealer’s sole remedy shall be such repair or replacement as is expressly provided above; and under no circumstances shall JMAZ be liable for any loss or damage, direct or consequential, arising out of the use of, or inability to use, this product.

JMAZ®

FCC Statement

This device meets the requirements of FCC Part 15 regulations. Its operation is subject to the following two conditions:

1. It must not cause harmful interference.
2. It must accept any interference received, including interference that could result in undesired operation.

FCC Radio Frequency Interference Warnings & Instructions

Please be aware that any changes or modifications to this product not explicitly approved by the party responsible for compliance may void the user's authority to operate the equipment.

Note: This equipment has been tested and found to comply with the limits for a Class A digital device under Part 15 of the FCC Rules. These limits are intended to provide reasonable protection against harmful interference in a commercial environment. This equipment generates, uses, and can emit radio frequency energy, and if it is not installed and used in accordance with the instructions in this manual, it may cause harmful interference to radio communications. Operating this equipment in a residential area is likely to result in harmful interference, and the user may need to resolve the interference at their own expense.

Europe Energy Saving Notice

Energy Efficiency Matters (EuP 2009/125/EC)

Saving electricity is crucial for protecting the environment. Please turn off all electronic devices when not in use. To prevent power consumption in standby mode, disconnect all equipment from the power source when not in use.

AC Power

Power Requirements: The MAD PAR 4IP has an external power supply that requires 12.6V DC, 3 Amps, with a frequency of 50/60Hz.

To ensure proper power supply, refer to the current rating listed on the product's back panel or consult the specifications chart. This rating indicates the average current draw under standard operating conditions.

For accurate circuit breaker sizing, power outlet selection, and wiring requirements, use the listed current value as a guideline. Consider any additional factors, such as the number of fixtures in the installation and the overall electrical load on the circuit.

Safety First: Always connect the product to a protected circuit equipped with a circuit breaker or fuse. Ensure the product is grounded properly to minimize the risk of electrical shock or fire.

Extend Product Life: To reduce unnecessary wear and extend the product's lifespan, disconnect it completely from power—either by turning off the breaker, unplugging it, or switching it off—during periods of non-use.

Battery

Battery Life Indicator

The OLED menu screen indicators display the remaining battery life of the fixture.

Battery Run Time

Maximum Fixture Run Time:
14 Hours @ 100% Battery Mode
40 Hours @ 25% Battery Mode

Note: Battery run time will be affected by how many LED diodes are currently turned on.

Battery Charging

The MAD PAR 4IP's built-in battery charges automatically when connected to a power source with the included AC charger. If the fixture is plugged in but not in use, make sure it is fully powered off.

Battery Safety Information

- The MAD PAR 4IP must NOT exceed 8 hours of plug-in time to a power source. Please ensure you have someone watching the fixtures when they are charging.
- Avoid causing a short circuit in the battery. A short circuit generates a high current, which can lead to overheating, leakage of electrolyte gel, release of harmful fumes, explosion risk, or other types of battery damage.
- Dropping, impacting, striking, bending, or subjecting the unit to other forms of mechanical shock may compromise the battery's performance and longevity.
- The fixture should not be exposed to intense heat or fire. Incineration or disposal of the fixture in a fire is strictly prohibited and may result in an explosion of the battery.
- Please be aware that shipping may result in damage to the fixture. Should any damage be observed, including damage to the metal casing, chemical or electrolyte odors, leakage of the electrolyte gel, or other miscellaneous damage,

IP65 Disclaimer:

The International Protection (IP) rating system is represented as "IP" (Ingress Protection) followed by two numbers (e.g., IP65), which indicate the level of protection. The first digit (Foreign Bodies Protection) shows the degree of protection against solid particles entering the device, while the second digit (Water Protection) represents the level of protection against water ingress. An IP65-rated lighting fixture is designed and tested to protect against dust ingress (6) and low-pressure water jets from any direction (5).

WARNING: Intended for TEMPORARY outdoor use only.

Maritime/Coastal Environment Installations: A coastal environment refers to areas directly adjacent to the sea and poses a risk to electronics due to exposure to atomized saltwater and humidity. A maritime environment includes any area within 5 miles of a coastal environment.

Not suitable for maritime or coastal environments. Installing this fixture in a marine or coastal area may lead to corrosion or excessive wear, damaging both internal and external components. Any damage or performance problems resulting from such installation will void the manufacturer's warranty.

Maritime installations require specialized preparation and maintenance. Due to the corrosive nature of marine environments, IP ratings designed for freshwater may not be sufficient. Regular maintenance and potential duty-cycles are essential to prevent damage. In humid or cold conditions, condensation can occur internally, necessitating duty-cycles to expel moisture. For permanent outdoor installations, a waterproof dome is highly recommended. Consult the dome manufacturer for specific duty-cycle guidelines.

Important: Not all features are available on every fixture. These instructions may not apply to your specific model. Please contact support for more information.

Exterior Maintenance: Inspect the exterior every 30 days. Ensure the unit is powered off and disconnected. Check the optics for any obstructions on the lens, and clean both the optics and chassis as needed. Schedule future maintenance based on your initial findings, keeping in mind that regular exterior maintenance is required, even if the luminaires are not in use due to their outdoor location. Applying a durable wax to the chassis is recommended to prevent contaminant buildup. Inspect power and data lines for signs of contamination or corrosion, and periodically reapply dielectric grease, especially in coastal environments. If any contamination or corrosion is found, thoroughly clean and/or replace connectors, then reapply dielectric grease. This maintenance should typically be performed annually or whenever an opportunity arises. To prevent issues, it is recommended to replace both vent valves annually, as the membrane can become contaminated or clogged, leading to improper venting of humidity within the luminaire. Inspect all mounting hardware as a precaution.

Interior Maintenance: Inspect the interior monthly while the unit is powered off.

- Inspect and clean the zoom/focus mechanism. Lubricate linear bearings with Krytox oil as needed, and check belts for wear.
- Inspect and manually rotate all rotating effect wheels, noting any resistance.
- Inspect all remaining rotating belts for wear.
- Inspect, clean, and check the rotation and connections of all fans.
- Inspect the CMY module, manually move flags, and check for resistance. If necessary, clean guide rods and reapply a thin layer of moly lube.
- Clean the interior with low-volume compressed air and optics before reassembling head covers.

While the base has limited moving parts, inspect the pan belt for wear. Always perform an IP test after removing any cover.

There's no fixed replacement schedule for parts like belts, stepper motors, PCBs, or LEDs. Replace them only when necessary. Cooling fans should be replaced proactively at 10,000 hours to maintain optimal cooling and protect internal components. In case a full-service breakdown is needed, please reach out to us at:

Important: Only the fixtures are IP65 rated. The flight case and charging bases are not designed for outdoor use or exposure to moisture.

This unit contains no user-serviceable parts. Attempting repairs will void the warranty. Modifications or disregard of safety instructions will also void the warranty.

Never look directly into the light source. Doing so can cause serious eye damage, including blindness. Sensitive individuals may experience epileptic seizures.

Operating Temperature: –10 ° C (14 ° F) To 60 ° C (140 ° F)

Safety Precautions:

- **Keep away from children.**
- **Avoid touching the fixture housing during operation.** Allow it to cool for 15 minutes before servicing.
- **Handle with care.** Avoid shaking or using excessive force.
- **Inspect the power cord.** Do not use if frayed, crimped, or damaged. Replace damaged cords immediately.
- **Do not remove the ground prong.** It's for safety.
- **Do not operate if damaged.**
- **Disconnect power before making connections.**
- **Ensure proper ventilation.** Maintain at least 6 inches (15 cm) of clearance around the fixture.
- **Do not remove the cover.**
- **Use secure mounting.** Use M10 x 25mm hardware and a safety cable for suspended installations.
- **Avoid dimmer packs.**
- **Disconnect during long periods of non-use.**
- **Mount in a stable location.**
- **Route power cords carefully.**
- **Clean as recommended by the manufacturer.**
- **Keep away from heat sources.**

Service: Have the fixture serviced by a qualified technician if:

- The power cord or plug is damaged.

- Objects have fallen into the fixture, or liquids have been spilled on it.
- The fixture is not operating normally or exhibits performance changes.

Protection Class 1: This fixture must be properly grounded. It contains no user-serviceable parts. Attempting repairs yourself will void the manufacturer's warranty. Modifying the fixture or ignoring the safety instructions and guidelines will also void the warranty and exclude any warranty claims or repairs.

Environment: This fixture is designed for use in dry, indoor environments only. Do not expose it to rain, or moisture.

Light Source: Never look directly into the light source, as it can cause retina injury or blindness. Sensitive individuals may experience epileptic shock.

Temperature: The maximum ambient operating temperature is 140°F (60°C), the minimum ambient operating temperature is 14°F (-10°C). Do not touch the fixture housing during operation. Disconnect the power and allow approximately 15 minutes for the fixture to cool down before servicing.

Handling: Do not shake the fixture or use brute force when installing or operating it.

Power Cord: Do not operate the fixture if the power cord is frayed, crimped, or damaged. Replace the power cord immediately if damaged, using one with the same power rating. Do not remove or break off the ground prong from the electrical cord, as it reduces the risk of electrical shock and fire in the event of an internal short.

Damage: Do not attempt to operate the unit if it has been damaged in any way. Avoid spilling water or other liquids onto the unit.

Connections: Disconnect from the main power before making any type of connection.

Ventilation: Do not block any air ventilation slots. Ensure all fans and air inlets remain clean and unobstructed. Maintain approximately 6 inches (15 cm) between the fixture and other devices or walls for proper cooling. Mount the unit in an area that allows proper ventilation.

Cover: Do not remove the cover for any reason.

Power Supply: Never plug the unit into a dimmer pack. Disconnect the main power during long periods of non-use. Mount the unit safely and securely. Route power-supply cords to prevent them from being walked on or pinched, especially at the point where they exit the unit.

Cleaning: Clean the fixture only as recommended by the manufacturer.

Heat Sources: Keep the fixture away from heat sources such as radiators, heat registers, stoves, or other appliances (including amplifiers) that produce heat.

Servicing: The fixture should be serviced by qualified personnel if:

- The power-supply cord or plug is damaged.
- Objects have fallen onto, or liquid has been spilled into the fixture.
- The fixture does not operate normally or shows a marked change in performance.
- The fixture has fallen or been subjected to extreme handling.

UV Warning

Risk Group 3 - Ultraviolet (UV) Radiation Hazard

This fixture emits high-intensity UV light from the UV color filter.

Wear protective eyewear and clothing. Limit prolonged exposure to the UV color filter.

Avoid white clothing and UV paints on skin. Maintain a minimum distance of 11 feet (3.3 meters) from the fixture to prevent direct eye or skin exposure.

Do not operate with damaged or missing covers.

Never look directly into the UV light or use optical instruments to view it.

Individuals with eye conditions, sunlight sensitivity disorders, or those taking photosensitive medication may experience discomfort from exposure to the UV light."

Additional Note: It's essential to include a warning about potential eye and skin damage from UV radiation, emphasizing the importance of protection.

JMAZ®

Specifications:

Light Source

- 60W (4 x 15W) RGBWA+UV LEDs
- LED Life Expectancy: 50,000 hrs

Color System

- RGBWA+UV Color Mixing 8/16 bit
- CCT: 2300K to 8500K

Body

- Die-Cast Aluminum and Steel Structure

Electronics

- Strobe Shutter: 1-25Hz
- Dimming Modes: 4

Electrical

- Input Voltage: 100 V – 240 V AC, 50/60 Hz
- Power Consumption: 60W
- PWM: 1.5KHz
- Battery Voltage: 11.1V
- Battery Capacity: 10,400 mAH, 115.5 Wh/hour
- Charger: 12.6V, 3A
- Rechargeable Battery Type: Lithium Ion ***UL Listed***

Optics

- Advanced Quadrilateral Lens Optic: 10° Beam Angle
- Diffuser Angle (Included): 20° Beam Angle

JMAZ®

Dynamic Effect

- Max 14 Hour Battery Life / 40 Hour In Battery Saving Mode
- Charging Time: 4 Hours
- Selectable Battery Saving Mode: 25%, 50%, 75%, 100%
- 73 Preset Color Programs
- 50 Advanced Sound Active Mode
- 72 Auto / Fade Built-In Programs
- Stand Alone Color Mixing
- Electronic Dimmer
- Fading/Jumping Macros Light Change And Jump
- Shutter/Strobe: Electronic
- Strobe Rate: 0-25 Hz
- Preset Color Temperature
- 4 Favorite Color Customization Triggered via DMX / IR Remote

Control

- Control Protocol: Wireless DMX, IR Remote
- Personalities: 5/6/8/16 CH DMX Modes
- OLED Graphical Display

Physical

- Adjustable Tilt Base: 0-40 Degree
- Cooling: Fanless

Certification / Qualifications

- RoHS, CE, FCC
- IP Rating: IP65
- Operating Temperature: - 10° C (14° F) to 60° C (140° F)

Box Content

- 1 x 20 Degree Diffuser
- 1 x External Charger
- 1 x User Manual
- 1 x IR Remote

Item Dimension & Weight

- Dimensions: 7.2” x 5.9” x 3”
- Weight: 4.4lbs

Photometric Beam Angle Data *10° Beam Angel*

R	3428	395	137	70
G	7307	906	302	161
B	1094	130	45	23
W	8551	1042	352	187
A	3537	432	151	79
UV	16	2	0.7	0.4
RGBWA/UV	21811	2500	872	429 (LUX)

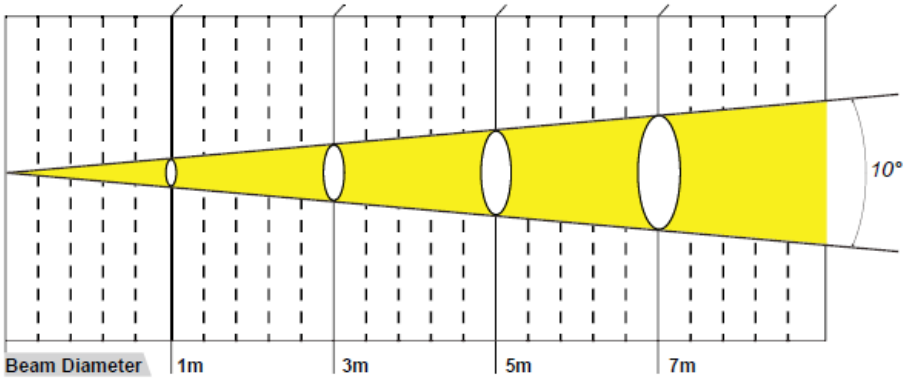

Photometric Beam Angle Data *20° diffuser*

R	788	83	32	17
G	1438	167	64	34
B	250	31	13	8
W	1724	199	76	40
A	671	79	31	18
UV	2.9	0.5	0.2	0.1
RGBWA/UV	4362	495	182	95 (LUX)

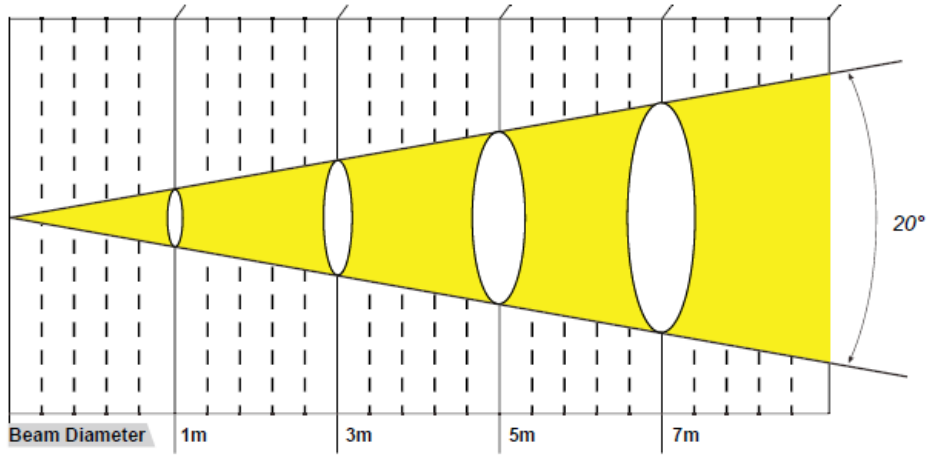

Installation Guidelines

Qualification: Only qualified individuals should install this fixture.

Compliance: Installation must comply with all local, national, and international commercial electrical and construction codes and regulations.

Support Structure: The trussing or installation area must support at least 10 times the weight of the fixture and any attached accessories without deformation.

Safety Attachments: The unit must be secured with a secondary safety attachment, such as an appropriately rated safety cable.

Professional Consultation: Before mounting the fixture to any metal truss/structure or placing it on any surface, consult a professional equipment installer to ensure the structure or surface can safely support the combined weight of the fixture, clamps, cables, and accessories.

Operating Temperature: The maximum ambient operating temperature is 140°F (60°C).

Placement: Install fixtures away from walking paths, seating areas, or locations where unauthorized personnel might reach them.

Safety Precautions: Never stand directly below the fixture when rigging, removing, or servicing it.

Overhead Installation: Overhead installations must always be secured with a secondary safety attachment, such as an appropriately rated safety cable that can hold at least 10 times the weight of the fixture.

Experience Required: Overhead mounting requires extensive experience, including calculating working load limits, understanding the installation material, and periodically inspecting all installation materials and the fixture itself. If you lack these qualifications, do not attempt the installation yourself.

Annual Inspection: The installation should be checked by a skilled professional once a year.

Potential Internal Damage from External Light Sources

Exposure to external sources such as direct sunlight, other lighting fixtures, moving head units, and lasers can cause significant internal damage to JMAZ lighting fixtures. This includes potential harm to optics, dichroic color filters, gobos (both glass and metal), prisms, animation wheels, frost filters, irises, shutters, motors, belts, wiring, discharge lamps, and LEDs. Such damage is not exclusive to JMAZ fixtures but is a common risk with lighting equipment from all manufacturers. While it is not possible to eliminate this risk, the following guidelines can help minimize potential damage. For further assistance, please contact JMAZ Service.

Guidelines:

INSTALLATION INSTRUCTIONS

Rigging the device



AUTION!

PLEASE CONSIDER THE RESPECTIVE NATIONAL NORMS DURING THE INSTALLATION. THE INSTALLATION MUST ONLY BE CARRIED OUT BY A QUALIFIED PERSON.

- The installation of the effect must be built and constructed in a way that it can hold 10 times the weight for 1 hour without any harmful deformation.
- The installation must always be secured with a secondary safety attachment, e.g. an appropriate safety rope.
- Never stand directly below the device when mounting, removing or servicing the fixture.
- The operator must make sure the safety relating, and machine technical installations are approved by an expert before taking the device into operation for the first time.
- These installations must be approved by a skilled person once a year.
- Overhead mounting requires extensive experience, including amongst others calculating working load limits, installation material being used, and periodic safety inspection of all installation material and the device. If you lack these qualifications, do not attempt the installation yourself. Improper installation can result in bodily injury.

Rigging using the omega brackets

Important: This step is very important to ensure safe rigging of the fixture.

- Fix the clamp to the bracket by tightening the nut and bolt to the bracket through the hole in the middle of the bracket.
- Insert the quick-lock fasteners of the first Omega holder into the respective holes on the

bottom of the device. Tighten the quick-lock fasteners fully clockwise.

- Install the second Omega holder.
- Pull the safety cable through the holes on the bottom of the base and over the trussing system or another suitable rigging point. Insert the end into the carabiner and tighten the safety screw.

Rigging Drawing

Important：Overhead rigging requires extensive experience, including (but not limited to) calculating working load limits, specifying installation/ rigging materials, and periodic safety inspection of all installation material as well as the device. If you lack these qualifications, do not attempt the rigging of this device yourself. Improper installation/ rigging can result in serious bodily injury.

- Be sure this fixture is kept at least 0.1m away from any flammable materials (decoration etc.).
- Always use and install the supplied safety cable as a safety measure to prevent accidental damage and/or injury in the event the clamp fails.
- Rig the projector high enough to provide clearance for people who may walk beneath the beam path or establishing a restricted access area that extends beyond the beam hazard distance.

BATTERY

The MAD PAR 4IP is equipped with a rechargeable lithium battery, allowing for cable-free operation.

Battery Charging: The MAD PAR 4IP's battery charges automatically when connected to a power source using the included adapter. Ensure the product is turned off when plugged in but not in use. Charge for no more than 8 hours, then unplug the device to maximize battery life.

Battery Safety: Before charging, read and follow battery safety instructions. Avoid using the MAD PAR 4IP on full power mode (100% LED power) while charging or plugged in to prevent overheating.

CONTROL PANEL

The MAD PAR 4IP features a display screen with a 5-button control pad, which can be used to easily adjust any device settings.

OVERVIEW

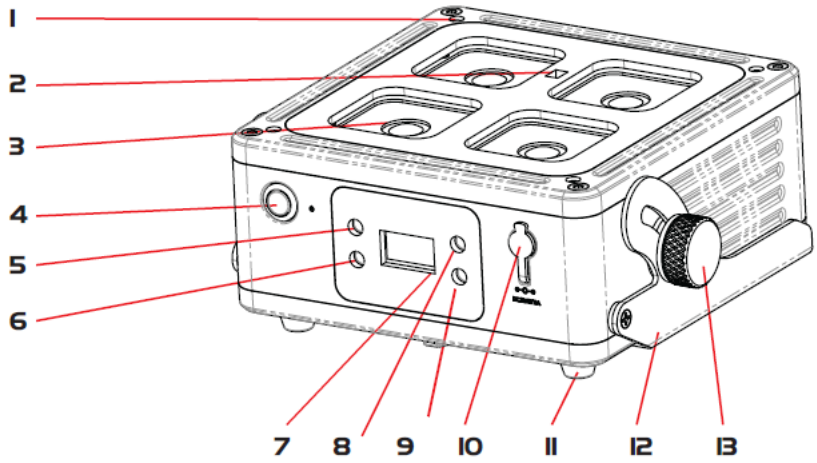

(1) Thread for fixing the diffuser
(2) Infrared sensor
(3) Lens/LED
(4) ON/OFF switch
(5) Menu button
(6) Enter button
(7) OLED display
(8) Up button
(9) Down button
(10) Charger input
(11) Rubber foot
(12) Folding foot
(13) Fixation screw folding foot

System Menu

Main Menu	Sub-Menu	Sub-Menu	Sub-Menu Options	Sub-Menu Options	Description
Address	DMX ADDR <001-512>				Set DMX Address
Channel	<5> <6> <8> <16>				Select DMX Channel Mode
Color	Color <01-73>				Select Preset Color
CCT	CCT <2300K> <2400K> <2500K> ..... <8500K>				Select Preset Color Temperature
Favorite	Favorite Custom01	Dimmer Red Green Blue White Amber UV	000-255		Set your Favorite Color Option (1-4)
	Favorite Custom02				1.Select Color 2. Select Fade/Jump
	Favorite Custom03				3. Select Speed 0-255
	Favorite Custom04				Select Built-In Advanced Sound Active Mode
Color Pro	Color Pro <PTY1,W,R+G+A>	PTY1 <Jump/Fade>	Jump/Fade <0-255>		Select Sound Sensitivity
Sound	Sound (1)	Sound <01-50>			0-100
	Sensitivity	Sensitivity <0-100>			Select Speed for Effect
	Speed	Speed <0-10>			0-10

	Microphone	Microphone Guest Mic Host Mic			Select Fixture Microphone Under Sound Mode. Host Mic = Master Light (All fixtures under the Master/Slave Mode will listen to the microphone from the Master fixture)
Manual	Dimmer	<000-255>			Guest Mic = Current Isolated Fixture
	Strobe	<000-255>			Combine Red, Green, Blue, White, Amber, UV to make custom colors
	Red	<000-255>			Display Battery Percentage
	Green	<000-255>			1-100%
	Blue	<000-255>			Display Current Temperature on Fixture
	White	<000-255>			Displays total amount of hours the fixture has been powered on in its lifetime.
	Amber	<000-255>			Displays the total amount of hours the fixture has been powered on during this session.
	UV	<000-255>			Software Version
Setting	Wireless	Power	Off On		Turn Wireless Features On or Off
		Mode	W-RCV	UnLink No/Yes	Sets fixture to Receive WDMX Signal
			W-SND	Linking No/Yes	Sets fixture to Transmit WDMX Signal
			WiDMX	WiDMX <01-06>	Sets fixture to WiDMX Protocol
			Generic	Generic <01-07>	Sets fixture to Generic Wireless DMX Protocol
	Power	<25%> <50%> <75%> <100%>			Total Power Output from LED's
	Dimmer	<OFF> <Dim 1> <Dim 2> <Dim 3> <Dim 4>			Sets Dimmer Mode for the fixture
	Host/Guest	Host/Guest <Guest> <Host>			Master and Slave settings

	Password	LOCK-30s LOCK-60s OFF			Automatic Screen Lock Settings Default Password: UP, DOWN, UP DOWN, ENTER
	Blcklight	OFF ON			Backlight Settings
	Loss Data	<Hold> <Blackout>			Settings for when DMX Signal is lost
	Reset	<NO> <YES>			Reset the fixture to Factory Settings
	White Bal.	Red Green Blue White Amber UV	<0-255>		White Balance Settings
	IR Setting	OFF ON			IR Settings (On or Off)
Battery	XXX%				Current Battery Capacity
Sys Info	Temp	Temp <xxC>			Current LED Temperature
	Fix Hours	Fix Hours <xxxxH>			Total On Time for fixture in its lifeitme.
	Cur Hours	Cur Hours <xxxxH>			Total On Time for fixture in this session.
	Software	Software <V1.0>			Current Software Version for fixture.
ID	ID <01-12>				All fixtures under the ID mode will be set as DMX Channel 6. ID 1 = DMX Address 1 ID 2 = DMX Address 7 ID 3 = DMX Address13 ID 4 = DMX Address19 ID 5 = DMX Address 25 ID 6 = DMX Address 31 ID 7 = DMX Address 37 ID 8 = DMX Address 43 ID 9 = DMX Address 49 ID 10 = DMX Address 55 ID 11 = DMX Address 61 ID 12 = DMX Address 67

IR Remote

The MAD PAR 4IP comes with an IR Remote that allows a user to cycle through different configurations and settings.

To enable the IR Control function, follow the instructions below:
Press Menu or the Up and Down buttons repeatedly until you see “Setting” on the display.
Press Enter.
Use the Up and Down buttons until you see “IR Setting” on the display.
Press Enter.
Use the Up and Down buttons to select either “ON” or “OFF” to Enable or Disable the IR Function.

IR Remote Control Operations:
Note: To use the IR Remote, please ensure you are pointing the IR Remote to the top of the fixture at the JMAZ Logo.



OFF
To black out the light of the fixture.
Pressing the “Off” Button will turn off the light and put the fixture into standby mode.

ON
To turn on the light of the fixture.
Pressing the “On” Button will turn on the light and activate the fixture.

UP
Pressing the “Up” Button will scroll the menu you are in or will increase the value of the function you are selecting.

DOWN
Pressing the “Down” Button will scroll the menu you are in or will decrease the value of the function you are selecting.

Red (R)
Pressing the “Red (R)” button, will change the light to a static Red color.

Green (G)
Pressing the “Green (G)” button, will change the light to a static Green color.

Blue (B)
Pressing the “Blue (B) button, will change the light to a static Blue color.

White (W)
Pressing the “White (W) button, will change the light to a static White color.

Amber (A)
Pressing the “Amber (A) button, will change the light to a static Amber color.

Cyan (C)
Pressing the “Cyan (C) button, will change the light to a static Cyan color.

Magenta (M)
Pressing the “Magenta (M) button, will change the light to a static Magenta color.

Pink (P)
Pressing the “Pink (P)” button, will change the light to a static Pink color.

Yellow (Y)
Pressing the “Yellow (Y)” button, will change the light to a static Yellow color.

Brightness
Pressing the “Brightness” Button will enter the Dimming setting and will enable you to adjust the brightness of the fixture from 0-100% under the **Manual Mode** only.
Use the Up and Down Button to adjust the brightness from 0-255. (0 = 0% brightness, and 255 = 100% brightness)
Under the Brightness Mode you can also use Buttons 1 – 10 to adjust the brightness from 0-100% in 10% intervals. (Ex. 1 = 10%, 2 = 20% ..10 = 100% Brightness, Button 11 has No Function, Button 12 will Reset the Value back to 0.)

Manual
Pressing the “Manual” Button will set the fixture into the Manual Color Mode.
Pressing the Color Buttons (R, G, B, W, A, and C = UV) will set the fixture to the value of the color.
Pressing the R Button will adjust the brightness value of the Red color.

A. Button 1 = 10%, Button 2 = 20% ...10 = 100% Brightness, Button 11 has No Function, Button 12 will Reset the brightness of the Red color back to 0.
B. Using the Up and Down Button will adjust the brightness from 0-255. (0 = 0% brightness, and 255 = 100% brightness)

Pressing the G Button will adjust the brightness value of the Green color.

A. Button 1 = 10%, Button 2 = 20% ...10 = 100% Brightness, Button 11 has No Function, Button 12 will Reset the brightness of the Green color back to 0.
B. Using the Up and Down Button will adjust the brightness from 0-255. (0 = 0% brightness, and 255 = 100% brightness)

DMX
Pressing the “DMX” Button will set the fixture into DMX Mode.

Fave 1, 2, 3, 4
Note: Please see Favorite Custom Color Mixing to program your Favorite Colors.
Pressing Fave 1 will set the fixture to the Favorite Custom Color Number 1 you have programmed in the menu.
Pressing Fave 2 will set the fixture to the Favorite Custom Color Number 2 you have programmed in the menu.
Pressing Fave 3 will set the fixture to the Favorite Custom Color Number 3 you have programmed in the menu.
Pressing Fave 4 will set the fixture to the Favorite Custom Color Number 4 you have programmed in the menu.

Button 1 – 10
Pressing Buttons 1 – 10 will change the value, function, or color depending on the mode you are on.

Host
Pressing the Host Button will set the Fixture to be the “Host” (Master) Light.

Guest
Pressing the Guest Button will set the Fixture to the “Guest” (Slave) Light.

ID
Pressing the ID Button will set the Fixture into the ID Mode.
Pressing Buttons 1 – 10 or the Up and Down buttons will set your desired ID Number to the fixture from ID 1-10.
Note: Button 11 and Button 12 have no function under the ID Mode.

Battery
Pressing the Battery Button will set the fixture into the Battery setting.
Pressing Buttons 1 – 4 will adjust the brightness of the Fixture in 25% intervals.
Button 1 = 25%
Button 2 = 50%
Button 3 = 75%
Button 4 = 100% (By default, the Fixture will be set at 100%)
Note*: Buttons 5-12 have No Function in this setting.
Note**: Decreasing the Brightness in this setting will extend the current battery life for this session depending on usage.

Auto (Total: 52 Auto Programs)
Pressing the Auto Button will set the Fixture into “Auto” Program Mode
Press Buttons 1 – 12 to select your desired Auto Program (1-12 Only)
After the 12th Program, please use the Up and Down Buttons to cycle through other Auto Programs (Programs 13-52)

CCT (Correlated Color Temperature, 2300K-8500K)
Pressing the CCT Button will set the Fixture into the CCT Mode
Pressing Buttons 1 – 12 will adjust the Preset Color Temperature
Button 1 = 2300K

Button 2 = 3200K
Button 3 = 4000K
Button 4 = 4500K
Button 5 = 5000K
Button 6 = 5600K
Button 7 = 6000K
Button 8 = 6500K
Button 9 = 7000K
Button 10 = 7500K
Button 11 = 8000K
Button 12 = 8500K
Pressing the Up and Down Buttons will adjust the Color Temperature in 100K intervals.

CCT	Button on Remote
2300K	1
2400K	
2500K	
2600K	
2700K	
2800K	
2900K	
3000K	
3100K	
3200K	2
3300K	
3400K	
3500K	
3600K	
3700K	
3800K	
3900K	
4000K	3
4100K	
4200K	
4300K	
4400K	
4500K	4
4600K	
4700K	
4800K	
4900K	
5000K	5
5100K	
5200K	
5300K	
5400K	
5500K	
5600K	6

5700K	
5800K	
5900K	
6000K	7
6100K	
6200K	
6300K	
6400K	
6500K	8
6600K	
6700K	
6800K	
6900K	
7000K	9
7100K	
7200K	
7300K	
7400K	
7500K	10
7600K	
7700K	
7800K	
7900K	
8000K	11
8100K	
8200K	
8300K	
8400K	
8500K	12

Strobe
Pressing the Strobe Button will set the Fixture into the Strobe setting.
Pressing Buttons 1 – 10 will change the value of the Strobe, this will affect the speed in 10% speed intervals. (Ex: 1 = 10%, 2 = 20%,… 10 = 100%)
Note: Button 11 and Button 12 have no function under the Strobe setting.

Fade (Total Fade Programs: XXX)
Pressing the Fade Button
Pressing the Fade Button will set the Fixture into “Fade” Program Mode
Press Buttons 1 – 12 to select your desired Fade Program (1-12 Only)
After the 12th Program, please use the Up and Down Buttons to cycle through other Fade Programs

Sound (Advanced Sound Active Mode, Total Sound Programs: XXX)
Pressing the Sound Button
Pressing the Sound Button will set the Fixture into “Advanced Sound Active” Program Mode
Press Buttons 1 – 12 to select your desired Sound Program (1-12 Only)
After the 12th Program, please use the Up and Down Buttons to cycle through other Sound Programs

Sound Mode Numbers	New Modes	Buttons
1	Red @ 12, Red @ 255	1
2	Green @ 12, Green @ 255	2
3	Blue @ 12, Blue @ 255	3
4	White @ 12, White @ 255	
5	Amber @ 12, Amber @ 255	4
6	(Red@255+Blue@255) @5%, (Red@255+Blue@255) @100%	
7	(Red@255+Blue@50) @5%, (Red@255+Blue@50) @100%	
8	(Red@255+UV@255) @5%, (Red@255+UV@255) @ 100%	
9	(Red@255+White@128) @5%, (Red@255+White@128) @100%	
10	(Green@255, Blue@128) @5%, (Green@255, Blue@128) @100%	
11	(Red@255, Green@128) @5%, (Red@255, Green@128) @100%	
12	(Red@255, Blue@35, UV@255) @5%, (Red@255, Blue@35, UV@255) @100%	
13	(Green@255, UV@255) @5%, (Green@255, UV@255) @100%	
14	(White@255, UV@255) @5%, (White@255, UV@255) @100%	
15	(Green@255, Blue@255) @5%, (Green@255, Blue@255) @100%	
16	(Red@255, Green@255) @5%, (Red@255, Green@255) @100%	
17	(Green@255, White@128) @5%, (Green@255, White@128) @100%	
18	(Red@255, Amber@255) @5%, (Red@255, Amber@255) @100%	
19	(Red@255, Green@255, Blue@80, White@255, Amber@180) @5%, (Red@255, Green@255, Blue@80, White@255, Amber@180) @100%	
20	(Red@255) @5%, (Red@255) @100%, (Blue@255) @5%, (Blue@255) @100%	
21	(Red@255+Blue@255) @5%, (Red@255+Blue@255) @100% ,(Blue@255) @5%, (Blue@255) @100%	5
22	(Red@128+Blue@255) @5%, (Red@128+Blue@255) @100% ,(Green@255) @5%, (Green@255) @100%	6
23	(Red@255+Blue@50) @5%, (Red@255+Blue@50) @100% ,(Green@255) @5%, (Green@255) @100%	
24	(Amber@255) @5%, (Amber@255) @100%, (White@255) @5%, (White@255) @100%	
25	(Red@255, Green@128) @5%, (Red@255, Green@128) @100%, (Green@255+Blue@128) @5%, (Green@255, Blue@128) @100%	7
26	(Red@255) @5%, (Red@255) @100%, (White@255) @5%, (White@255) @100%	
27	(Blue@255) @5%, (Blue@255) @100%, (White@255) @5%, (White@255) @100%	
28	(Red@255) @5%, (Red@255) @100%, (Green@255) @5%, (Green@255) @100%	8
29	(Red@255) @5%, (Red@255) @100%, (Amber@255) @5%, (Amber@255) @100%	
30	(Blue@255) @5%, (Blue@255) @100%, (Green@255) @5%, (Green@255) @100%	
31	Sound 1 + Sound 2 + Sound 3	
32	Sound 1 + Sound 4 + Sound 3	
33	Sound 2 + Sound 3 + Sound 4	
34	Sound 5 + Sound 2 + Sound 1	

35	Sound 21 + Sound 22 + Sound 24	
36	Sound 15 + Sound 16 + Sound 17	
37	Sound 18 + Sound 19 + Sound 20	
38	Sound 5 + Sound 6 + Sound 7	
39	Sound 10 + Sound 20 + Sound 30	
40	Sound 19 + Sound 25 + Sound 22	
41	Sound 3 + Sound 5 + Sound 7 + Sound 9	
42	Sound 2 + Sound 4 + Sound 6 + Sound 8	
43	Sound 5 + Sound 10 + Sound 15 + Sound 20	
44	Sound 8 + Sound 12 + Sound 13 +Sound 14	
45	Sound 12 +Sound 10 + Sound 11 + Sound 19	
46	Sound 1 +Sound 2 + Sound 3 + Sound 4 + Sound 5	
47	Sound 24 + Sound 25 + Sound 26 + Sound 27 + Sound 28	9
48	Sound 1 - 30 (Cycle Through ALL Sound Modes)	10
49	Randomly Select Sound Numbers 6 - 19	11
50	Randomly Select Sound Numbers 1 - 30	12

Sense (Sensitivity for Sound Mode)
Pressing the Sense Button will set the fixture into the Sensitivity Setting under the Advanced Sound Active Mode.
Pressing Buttons 1 – 10 will change the value of the Sensitivity, this will affect the Sensitivity in 10% intervals. (Ex: 1 = 10%, 2 = 20%… 10 = 100%)
Using the Up and Down buttons will change the value of the Sensitivity from 0 – 100%
*Note: Button 11 has no function, Button 12 will reset the fixture's current Sensitivity value back to 0.

Speed
Pressing the Speed Button will change the current value of the Fixture depending on the current mode.
Using the Up and Down buttons will change the value of the Speed from 0 - 10
(Ex: 1 = Slowest, 10 = Fastest)
Note: Button 11 has no value, Button 12 will reset the fixture's current Speed value back to 0.

1. Under Auto Mode, Changing the Speed value will change the speed of the auto programs from fast to slow, or slow to fast.
2. Under Sound Mode, changing the Speed value will change the speed of the Sound Program from fast to slow, or slow to fast. (Loud Environments may affect the fixtures' ability to work properly, please adjust the Speed for the most optimal experience.)
3. Under Fade Mode, changing the Speed value will change the speed of the Fade Program from fast to slow, or slow to fast.

Color (Static Preset Colors, Total Preset Colors: 73)
Pressing the Color Button will set the fixture into the Static Preset Color Mode. Use the Color Buttons to set your desired color.
Pressing R will set the fixture to a static Red color.
Pressing G will set the fixture to a static Green color.
Pressing B will set the fixture to a static Blue color.
Pressing W will set the fixture to a static White color.
Pressing A will set the fixture to a static Amber color.
Pressing C will set the fixture to a static Cyan color.
Pressing M will set the fixture to a static Magenta color.
Pressing Y will set the fixture to a static Yellow color.

Pressing Buttons 1 - 12 will set the fixture into Preset Colors
Button 1 = Pink
Pressing Up and Down buttons will cycle through the Preset Colors from 1 – 73.

DMX-512: DMX is short for Digital Multiplex. This is a universal protocol used as a form of communication between intelligent fixtures and controllers. A DMX controller sends DMX data instructions from the controller to the fixture. DMX data is sent as serial data that travels from fixture to fixture via the DATA "IN" and DATA "OUT" XLR terminals located on all DMX fixtures (most controllers only have a DATA "OUT" terminal).

DMX Linking: DMX is a language allowing all makes and models of different manufacturers to be linked together and operate from a single controller, if all fixtures and the controller are DMX compliant. To ensure proper DMX data transmission, try to use the shortest cable path possible when linking several DMX fixtures. The order in which fixtures are connected in a DMX line does not influence the DMX addressing. For example, a fixture assigned a DMX address of 1 may be placed anywhere in a DMX line: at the beginning, at the end, or anywhere in the middle. When a fixture is assigned a DMX address of 1, the DMX controller knows to send DATA assigned to address 1 to that unit, no matter where it is in the DMX chain.

Wireless DMX Settings

1. To turn on/off the Wireless DMX Function, please follow the steps below:
    a. Press the Menu repeatedly until you see Setting.
    b. Press Enter.
    c. Press Up and Down arrows repeatedly until you see "Wireless" show up on the Display.
    d. Press Enter.
    e. Press Up and Down until you see "Power" show up on the Display.
    f. Press Up and Down arrows to select either "ON" or "OFF" to turn On or Off the Wireless DMX Function.
2. **W-RCV (Wi-MAZ Wireless DMX Receiving Mode)**
    a. Press the Menu repeatedly until you see Setting.
    b. Press Enter.
    c. Press Up and Down arrows repeatedly until you see "Wireless" show up on the Display.
    d. Press Enter.
    e. Press Up and Down until you see "Mode" show up on the Display.
    f. Press Enter.
    g. Press Up and Down arrows until you see "W-RCV" on the Display.
    h. Press Enter.
    i. Press Up and Down arrows in the "UnLink" setting to select "NO" to delete the current connection.
    j. Now you can create a new connection

3. **W-TRN (Wi-MAZ Wireless DMX Transmitting Mode, Creating a New Connection)**
   ***Note: In order to be in Wireless DMX Transmitting Mode, please ensure the light is under the Host(Master) Light. Please see Host/Guest Instructions for more information.**
   a. Press the Menu repeatedly until you see Setting.
   b. Press Enter.
   c. Press Up and Down arrows repeatedly until you see “Wireless” show up on the Display.
   d. Press Enter.
   e. Press Up and Down until you see “Mode” show up on the Display.
   f. Press Enter.
   g. Press Up and Down arrows until you see “W-TRN” on the Display.
   h. Press Enter.
   i. Press Up and Down arrows in the “Linking” setting to select “YES” to establish a connection with the receiver(s).

4. **WiDMX (Wireless DMX Transmitting / Receiving Mode)**
   a. Press the Menu repeatedly until you see Setting.
   b. Press Enter.
   c. Press Up and Down arrows repeatedly until you see “Wireless” show up on the Display.
   d. Press Enter.
   e. Press Up and Down until you see “Mode” show up on the Display.
   f. Press Enter.
   g. Press Up and Down arrows until you see “WiDMX” on the Display.
   h. Press Enter.
   i. Use Up and Down arrows to select from Group 01 – 06.
      i. Group 1 = Red
      ii. Group 2 = Green
      iii. Group 3 = Blue
      iv. Group 4 = Yellow (R+G)
      v. Group 5 = Cyan (G+B)
      vi. Group 6 = Purple (R+G)

5. **Generic (Wireless DMX Transmitting / Receiving Mode)**
   Note: Under the Generic Mode, this Wireless DMX Protocol will be compatible with all generic Wireless DMX Transmitters.
   a. Press the Menu repeatedly until you see Setting.
   b. Press Enter.
   c. Press Up and Down arrows repeatedly until you see “Wireless” show up on the Display.
   d. Press Enter.
   e. Press Up and Down until you see “Mode” show up on the Display.
   f. Press Enter.
   g. Press Up and Down arrows until you see “Generic” on the Display.
   h. Press Enter.
   i. Use Up and Down arrows to select from Group 01 – 07.
      i. Group 1 = Red
      ii. Group 2 = Green
      iii. Group 3 = Blue
      iv. Group 4 = Yellow (R+G)
      v. Group 5 = Cyan (G+B)
      vi. Group 6 = Purple (R+B)
      vii. Group 7 = White (R+G+B)

Standalone Setup:

Address:
To set the DMX Address on the MAD PAR 4IP, follow the instructions below:
Press Menu, or the Up and Down arrows repeatedly until Address shows on the display.
Press Enter
Use Up or Down to select the DMX Address between 1 to 512.
Press Enter once you've chosen your desired DMX Address

Channel:
To set the DMX Channel on the MAD PAR 4IP, follow the instructions below:
Press Menu, or the Up and Down arrows repeatedly until Channel shows on the display:
Press Enter
Use Up or Down to select your desired DMX Channel: 6, 8, 16.
Press Enter once you've chosen your desired DMX Channel.

Preset Color-Mode:
To run the MAD PAR 4IP on a Preset Static Color, follow the instructions below:
Press Menu, or the Up and Down arrows repeatedly until Color shows up on the Display.
Press Enter
Use Up or Down to select Preset Color from Color 1 to Color 70.
Press Enter once you've chosen your desired color.

CCT Mode:
To run the MAD PAR 4IP on CCT Mode, follow the instructions below:
Press Menu, or the Up and Down arrows repeatedly until you see CCT on the Display.
Press Enter
Use Up or Down to select the CCT Color value between 2300K to 8500K.
Press Enter once you've chosen your desired color.

Favorite Custom Color Mixing:
To select between your 4 favorite color options, follow the instructions below:
Press Menu or the Up and Down arrows repeatedly until you see Favorite on the Display.
Press Enter.
Use Up and Down to select between the 4 custom colors you should like to change:

- Favorite Custom 1
- Favorite Custom 2
- Favorite Custom 3
- Favorite Custom 4.

1. Press Enter
2. Use Up and Down to switch between Dimmer Brightness: 0-255.
3. Press Enter once you've chosen your desired value.
4. Use Up and Down to switch between Red Value: 0-255.
5. Press Enter once you've chosen your desired value.
6. Use Up and Down to switch between Green Value: 0-255.
7. Press Enter once you've chosen your desired value.
8. Use Up and Down to switch between Blue Value: 0-255.
9. Press Enter once you've chosen your desired value.
10. Use Up and Down to switch between White Value: 0-255.
11. Press Enter once you've chosen your desired value.
12. Use Up and Down to switch between Amber Value: 0-255.
13. Press Enter once you've chosen your desired value.
14. Use Up and Down to switch between UV Value: 0-255.
15. Press Enter once you've chosen your desired value.

16. Repeat the above for Custom Color 2, 3, and 4.
17. Press Enter once you've finished your selections.

Auto-Programs

To set the MAD PAR 4IP In Automatic Mode, follow the instructions below:
Press Menu or the Up and Down arrows repeatedly until you see Color Pro on the display.
Press Enter
Use Up and Down buttons to choose your desired colors:

1. PTY1 (RGB)
2. PTY2 (CMY)
3. PTY3 (RGBCMY)
4. PTY4 (RGBWAUV)
5. RBW (RYGCBM)
6. RD
7. RG
8. RB
9. RA
10. RY
11. R,UV
12. RM
13. RW
14. R+UV, B
15. R+UV, G
16. R+UV, W
17. R+UV, A
18. R+W, B
19. R+W, G
20. R+W, A
21. R+W, W
22. GD
23. GB
24. GA
25. GY
26. G,UV
27. GM
28. GW
29. G+UV, B
30. G+UV, G
31. G+UV, W
32. G+UV, A
33. G+W, B
34. G+W, G
35. G+W, A
36. G+W, W
37. BD
38. BA
39. BY
40. B,UV
41. BM
42. BW
43. B+UV, B
44. B+UV, G
45. B+UV, A
46. B+W, B
47. B+W, G

48. B+W, A
49. AD
50. AY
51. A,UV
52. AM
53. AW
54. YD
55. Y,UV
56. YM
57. YW
58. UV,D
59. UV,M
60. UV,W
61. MD
62. MW
63. WD
64. W,R+A
65. W,R+W
66. W,R+UV
67. W,B+G
68. W,B+W
69. W,B+UV
70. W,A+UV
71. W,A+W
72. W,R+G+A

Press Enter once you've chosen your desired color.
Use Up and Down arrows to select the light to either Fade or Jump.
Press Enter on the desired effect.
Use Up and down arrows to select the speed value from 0-255 for either Fade or Jump.

Advanced Sound Active Mode:

- To enter the Advanced Sound Active Mode, follow the instructions below:
- Press Menu or the Up and Down arrows repeatedly until you see Sound on the Display.
- Press Enter.
- Use Up and Down arrows to select the Sound Program from 1-26.
- Press Enter once you've found your desired value.
- Use Up and Down arrows to select the Sensitivity: 1-100
- Press Enter once you've found your desired value.
- Use Up and Down arrows to select the Speed: 1-10
- Press Enter once you've found your desired value.
- Use Up and Down arrows to select the Microphone selection:
- Press Enter
- Use Up and Down arrows to select between Host Mic, and Guest Mic.
- Press Enter once you've found your desired value.
- Press Enter.

Manual Mode:

- To set the custom color on the MAD PAR 4IP, follow the instructions below:
- Press Menu, or Up and Down arrows until you see Manual on the display.
- Press Enter.
- On Dimmer, press Enter and select a value between 0-255.
- Press Enter once you've found your desired value.
- Use Up and Down arrows to select the Strobe: 0-255.

- Press Enter once you've found your desired value.
- Use Up and Down arrows to select the Red Color Value: 0-255.
- Press Enter once you've found your desired value.
- Use Up and Down arrows to select the Green Color Value: 0-255.
- Press Enter once you've found your desired value.
- Use Up and Down arrows to select the Blue Color Value: 0-255.
- Press Enter once you've found your desired value.
- Use Up and Down arrows to select the White Color Value: 0-255.
- Press Enter once you've found your desired value.
- Use Up and Down arrows to select the Amber Color Value: 0-255.
- Press Enter once you've found your desired value.
- Use Up and Down arrows to select the UV Color Value: 0-255.
- Press Enter once you've found your desired value.

Settings:

- To access the Settings Menu Page, follow the instructions below:
- Press Menu, or Up and Down arrows until you see Setting on the Display.

Wireless DMX Protocol:

Power:

- Use Up and Down arrows until you see Power on the Display.
- Press Enter.
- Select from: 25%, 50%, 75%, and 100% to select the level of brightness for the MAD PAR 4IP.

Dimmer:

- Use Up and Down arrows until you see Dimmer on the Display.
- Press Enter.
- Use Up and Down arrows to select between: OFF, Dim 1, Dim 2, Dim 3, Dim 4
- Press Enter once you've found your desired selection.

Host/Guest.

- Use Up and Down arrows until you see Host/Guest on the Display.
- Press Enter.
- Use Up and Down arrows to select either from Guest or Host. Guest will be the slave light, and Host will be the Master light.
- Press Enter once you've found your desired selection.

Password:

- Use Up and Down arrows until you see Password on the Display.
- Press Enter.
- Use Up and Down arrows to select between LOCK-30s, LOCK60s, and OFF.
- Press Enter once you've found your desired selection.

Backlight:

- Use Up and Down arrows until you see Backlight on the Display.
- Press Enter.
- Use Up and Down arrows to select either OFF or ON.
- Press Enter once you've found your desired selection.

Loss Data:

- Use Up and Down arrows until you see Loss Data on the Display.
- Press Enter.

- Use Up and Down arrows to select either HOLD or BLACKOUT.
- Press Enter once you've found your desired selection.

Reset:

- Use Up and Down arrows until you see Reset on the Display.
- Press Enter.
- Use Up and Down arrows to select between NO and YES.
- Press Enter once you've found your desired selection.

White Balance:

- Use Up and Down arrows until you see White Bal. on the Display.
- Press Enter.
- Use Up and Down to select your desired Color: Red, Blue, White, Amber, or UV
- Press Enter once you've found your desired selection.
- Use Up and Down arrows to select the Value from 0-255 for the Color.
- Press Enter once you've found your desired selection.

IR Setting:

- Use Up and Down arrows until you see IR Setting is on the Display.
- Press Enter.
- Use Up and Down arrows to select ON or OFF.
- Press Enter once you've found your desired selection.

Battery:

To access the Battery Page, follow the instructions below:

- Press Menu, or Up and Down arrows until you see Battery on the Display.
- Press Enter.
- This will display the current battery level of the light.

System Info:

To access the System Info Page, follow the instructions below:

- Press Menu or Up and Down arrows until you see SYS INFO on the Display.
- Press Enter.
- Use Up and Down arrows to select Temp., this will display the current Temperature of the fixture.
- Press Enter.
- Use Up and Down arrows to select Fix Hours, this will display the total lifetime of the fixture being powered on.
- Press Enter
- Use Up and Down arrows to select Cur Hours, this will display the number of hours the fixture has been powered on during this session.
- Press Enter
- Use Up and Down arrows to select Software, this will display the currently installed firmware version on the fixture.
- Press Enter.

ID:

To access the ID page, follow the instructions below:

- Press Menu, or Up and Down arrows until you see ID on the display.
- Press Enter.
- Use Up and Down arrows to select from 1 – 10.
- Press Enter once you've found your desired selection.

All fixtures under the ID mode will be set as DMX Channel 6 with the pre-assigned DMX to the following ID's:

ID 1 = DMX Address 1
ID 2 = DMX Address 7
ID 3 = DMX Address13
ID 4 = DMX Address19
ID 5 = DMX Address 25
ID 6 = DMX Address 31
ID 7 = DMX Address 37
ID 8 = DMX Address 43
ID 9 = DMX Address 49
ID 10 = DMX Address 55
ID 11 = DMX Address 61
ID 12 = DMX Address 67

DMX Traits/Chart

6-channel mode		
Channel	Value	Feature
1	0-255	Red, 0 - 100 %
2	0-255	Green, 0 - 100 %
3	0-255	Blue, 0 - 100 %
4	0-255	White, 0 - 100 %
5	0-255	Amber, 0 - 100 %
6	0-255	UV, 0 - 100 %
8-Channel Mode		
Channel	Value	Setting
1	0-255	Dimmer, 0-100%
2	0-255	Red, 0 - 100 %
3	0-255	Green, 0 - 100 %
4	0-255	Blue, 0 - 100 %
5	0-255	White, 0 - 100 %
6	0-255	Amber, 0 - 100 %
7	0-255	UV, 0 - 100 %
8	0	No Function
	1-5	Sound control
	6-10	No Function
	11-255	Strobe Effect, slow to fast
16-Channel Mode		
Channel	Value	Setting
1	0-255	Dimmer, 0-100%
2	0-255	Red, 0 - 100 %
3	0-255	Green, 0 - 100 %
4	0-255	Blue, 0 - 100 %
5	0-255	White, 0 - 100 %
6	0-255	Amber, 0 - 100 %
7	0-255	UV, 0 - 100 %
8	0-9	No Function
	10-255	Strobe, Slow - Fast
9	0-36	No Function
	37-39	R
	40-42	G
	43-45	B
	46-48	W
	49-51	A
	52-54	UV
	55-57	R255+B050
	58-60	R255+G128
	61-63	R+G
	64-66	R255+B128
	67-69	R+B
	70-72	R255+W128
	73-75	R+A
	76-78	R+W

	79-81	R255+B35+UV255
	82-84	R+UV
	85-87	G255+B128
	88-90	G+B
	91-93	G255+W128
	94-96	G+A
	97-99	G255+A128
	100-102	G+W
	103-105	G+UV
	106-108	B255+W128
	109-111	B+A
	112-114	B+W
	115-117	B+UV
	118-120	A+W
	121-123	B+UV
	124-126	W+UV
	127-129	R+G+B
	130-132	R+G+A
	133-135	R+G+W
	136-138	R+G+UV
	139-141	R+B+A
	142-144	R+B+W
	145-147	R+B+UV
	148-150	R+A+W
	151-153	R+A+UV
	154-156	R+W+UV
	157-159	G+B+A
	160-162	G+B+W
	163-	G+B+UV

	165	
	166-168	G+A+W
	169-171	G+A+UV
	172-174	G+W+UV
	175-177	B+A+W
	178-180	B+A+UV
	181-183	B+W+UV
	184-186	A+W+UV
	187-189	R+G+B+A
	190-192	R+G+B+W
	193-195	R+G+B+UV
	196-198	R+G+A+W
	199-201	R+G+A+UV
	202-204	R+G+W+UV
	205-207	R+B+A+W
	208-210	R+B+A+UV
	211-213	R+B+W+UV
	214-216	R+A+W+UV
	217-219	G+B+A+W
	220-222	G+B+A+UV
	223-235	G+B+W+UV
	226-228	G+A+W+UV
	229-231	B+A+W+UV
	232-234	R+G+B+A+W
	235-237	R+G+B+A+UV
	238-240	R+G+B+W+UV

	241-243	R+G+A+W+UV
	244-246	R+B+A+W+UV
	247-249	G+B+A+W+UV
	250-252	R255+G255+B80+W255+A180+UV000
	253-255	RGBAWUV
10	0-22	No Function
	23	2300K
	24	2400K
	25	2500K
	26	2600K
	27	2700K
	28	2800K
	29	2900K
	30	3000K
	31	3100K
	32	3200K
	33	3300K
	34	3400K
	35	3500K
	36	3600K
	37	3700K
	38	3800K
	39	3900K
	40	4000K
	41	4100K
	42	4200K
	43	4300K
	44	4400K
	45	4500K
	46	4600K
	47	4700K
	48	4800K
	49	4900K
	50	5000K
	51	5100K
	52	5200K
	53	5300K
	54	5400K
	55	5500K
	56	5600K
	57	5700K
	58	5800K
	59	5900K

	60	6000K
	61	6100K
	62	6200K
	63	6300K
	64	6400K
	65	6500K
	66	6600K
	67	6700K
	68	6800K
	69	6900K
	70	7000K
	71	7100K
	72	7200K
	73	7300K
	74	7400K
	75	7500K
	76	7600K
	77	7700K
	78	7800K
	79	7900K
	80	8000K
	81	8100K
	82	8200K
	83	8300K
	84	8400K
	85	8500K
	86-255	No Function
11	0-36	No Function
	37-39	PTY1(RGB)
	40-42	PTY2(CMY)
	43-45	PTY3(RGBCMY)
	46-48	PTY4(RGBWAUV)
	49-51	RBW(RYGCBM)
	52-54	RD
	55-57	RG
	58-60	RB
	61-63	RA
	64-66	RY
	67-69	R,UV
	70-72	RM
	73-75	RW
	76-78	R+UV, B
	79-81	R+UV, G
	82-84	R+UV, W
	85-87	R+UV, A
	88-90	R+W, B
	91-93	R+W, G

	94-96	R+W, A
	97-99	R+W, W
	100-102	GD
	103-105	GB
	106-108	GA
	109-111	GY
	112-114	G,UV
	115-117	GM
	118-120	GW
	121-123	G+UV, B
	124-126	G+UV, G
	127-129	G+UV, W
	130-132	G+UV, A
	133-135	G+W, B
	136-138	G+W, G
	139-141	G+W, A
	142-144	G+W, W
	145-147	BD
	148-150	BA
	151-153	BY
	154-156	B,UV
	157-159	BM
	160-162	BW
	163-165	B+UV, B
	166-168	B+UV, G
	169-171	B+UV, A
	172-	B+W, B

	174	
	175-177	B+W, G
	178-180	B+W, A
	181-183	AD
	184-186	AY
	187-189	A,UV
	190-192	AM
	193-195	AW
	196-198	YD
	199-201	Y,UV
	202-204	YM
	205-207	YW
	208-210	UV,D
	211-213	UV,M
	214-216	UV,W
	217-219	MD
	220-222	MW
	223-235	WD
	226-228	W,R+A
	229-231	W,R+W
	232-234	W,R+UV
	235-237	W,B+G
	238-240	W,B+W
	241-243	W,B+UV
	244-246	W,A+UV
	247-249	W,A+W

	250-255	W,R+G+A
12	0-127	Speed for Auto Programs(AUTO)
	128-255	Speed for Auto Programs(FADE)
13	0-10	No Function
	11-15	sound1
	16-20	sound2
	21-25	sound3
	26-30	sound4
	31-35	sound5
	36-40	sound6
	41-45	sound7
	41-45	sound8
	46-50	sound9
	51-55	sound10
	56-60	sound11
	61-65	sound12
	66-70	sound13
	71-75	sound14
	76-80	sound15
	81-85	sound16
	86-90	sound17
	91-95	sound18
	96-100	sound19
	101-105	sound20
	106-110	sound21
	111-115	sound22
	116-120	sound23
	121-125	sound24
	126-130	sound25
	131-135	sound26
	136-140	sound27
	141-145	sound28
	146-150	sound29
	151-155	sound30
	156-160	sound31

	161-165	sound32
	166-170	sound33
	171-175	sound34
	176-180	sound35
	181-185	sound36
	186-190	sound37
	191-195	sound38
	196-200	sound39
	201-205	sound40
	206-210	sound41
	211-215	sound42
	216-220	sound43
	221-225	sound44
	226-230	sound45
	231-235	sound46
	236-240	sound47
	241-245	sound48
	246-250	sound49
	251-255	sound50
14	0-255	Sensitivity
15	0-255	Speed for Sound Programs
16	0-255	Dimmer Speed Mode
5-Channel Mode		
Channel	Value	Setting
1 (CH9)	0-36	No Function
	37-39	R
	40-42	G
	43-45	B
	46-48	W
	49-51	A
	52-54	UV

	55-57	R255+B050
	58-60	R255+G128
	61-63	R+G
	64-66	R255+B128
	67-69	R+B
	70-72	R255+W128
	73-75	R+A
	76-78	R+W
	79-81	R255+B35+UV255
	82-84	R+UV
	85-87	G255+B128
	88-90	G+B
	91-93	G255+W128
	94-96	G+A
	97-99	G255+A128
	100-102	G+W
	103-105	G+UV
	106-108	B255+W128
	109-111	B+A
	112-114	B+W
	115-117	B+UV
	118-120	A+W
	121-123	B+UV
	124-126	W+UV
	127-129	R+G+B
	130-132	R+G+A
	133-135	R+G+W
	136-138	R+G+UV
	139-141	R+B+A
	142-144	R+B+W
	145-147	R+B+UV
	148-150	R+A+W
	151-	R+A+UV

	153	
	154-156	R+W+UV
	157-159	G+B+A
	160-162	G+B+W
	163-165	G+B+UV
	166-168	G+A+W
	169-171	G+A+UV
	172-174	G+W+UV
	175-177	B+A+W
	178-180	B+A+UV
	181-183	B+W+UV
	184-186	A+W+UV
	187-189	R+G+B+A
	190-192	R+G+B+W
	193-195	R+G+B+UV
	196-198	R+G+A+W
	199-201	R+G+A+UV
	202-204	R+G+W+UV
	205-207	R+B+A+W
	208-210	R+B+A+UV
	211-213	R+B+W+UV
	214-216	R+A+W+UV
	217-219	G+B+A+W
	220-222	G+B+A+UV
	223-235	G+B+W+UV
	226-228	G+A+W+UV

	229-231	B+A+W+UV
	232-234	R+G+B+A+W
	235-237	R+G+B+A+UV
	238-240	R+G+B+W+UV
	241-243	R+G+A+W+UV
	244-246	R+B+A+W+UV
	247-249	G+B+A+W+UV
	250-252	R255+G255+B80+W255+A180+UV000
	253-255	RGBAWUV
2 (CH10)	0-22	No Function
	23	2300K
	24	2400K
	25	2500K
	26	2600K
	27	2700K
	28	2800K
	29	2900K
	30	3000K
	31	3100K
	32	3200K
	33	3300K
	34	3400K
	35	3500K
	36	3600K
	37	3700K
	38	3800K
	39	3900K
	40	4000K
	41	4100K
	42	4200K
	43	4300K
	44	4400K
	45	4500K
	46	4600K
	47	4700K
	48	4800K
	49	4900K
	50	5000K
	51	5100K
	52	5200K

	53	5300K
	54	5400K
	55	5500K
	56	5600K
	57	5700K
	58	5800K
	59	5900K
	60	6000K
	61	6100K
	62	6200K
	63	6300K
	64	6400K
	65	6500K
	66	6600K
	67	6700K
	68	6800K
	69	6900K
	70	7000K
	71	7100K
	72	7200K
	73	7300K
	74	7400K
	75	7500K
	76	7600K
	77	7700K
	78	7800K
	79	7900K
	80	8000K
	81	8100K
	82	8200K
	83	8300K
	84	8400K
	85	8500K
	86-255	No Function
3 (CH13)	0-10	No Function
	11-15	sound1
	16-20	sound2
	21-25	sound3
	26-30	sound4
	31-35	sound5
	36-40	sound6
	41-45	sound7
	41-45	sound8
	46-50	sound9
	51-55	sound10
	56-60	sound11
	61-65	sound12

	66-70	sound13
	71-75	sound14
	76-80	sound15
	81-85	sound16
	86-90	sound17
	91-95	sound18
	96-100	sound19
	101-105	sound20
	106-110	sound21
	111-115	sound22
	116-120	sound23
	121-125	sound24
	126-130	sound25
	131-135	sound26
	136-140	sound27
	141-145	sound28
	146-150	sound29
	151-155	sound30
	156-160	sound31
	161-165	sound32
	166-170	sound33
	171-175	sound34
	176-180	sound35
	181-185	sound36
	186-190	sound37
	191-195	sound38
	196-200	sound39
	201-205	sound40
	206-	sound41

	210	
	211-215	sound42
	216-220	sound43
	221-225	sound44
	226-230	sound45
	231-235	sound46
	236-240	sound47
	241-245	sound48
	246-250	sound49
	251-255	sound50
4 (CH11)	0-36	No Function
	37-39	PTY1(RGB)
	40-42	PTY2(CMY)
	43-45	PTY3(RGBCMY)
	46-48	PTY4(RGBAWUV)
	49-51	RBW(RYGCBM)
	52-54	RD
	55-57	RG
	58-60	RB
	61-63	RA
	64-66	RY
	67-69	R,UV
	70-72	RM
	73-75	RW
	76-78	R+UV, B
	79-81	R+UV, G
	82-84	R+UV, W
	85-87	R+UV, A
	88-90	R+W, B
	91-93	R+W, G
	94-96	R+W, A
	97-99	R+W, W
	100-102	GD
	103-105	GB
	106-108	GA
	109-111	GY

	112-114	G,UV
	115-117	GM
	118-120	GW
	121-123	G+UV, B
	124-126	G+UV, G
	127-129	G+UV, W
	130-132	G+UV, A
	133-135	G+W, B
	136-138	G+W, G
	139-141	G+W, A
	142-144	G+W, W
	145-147	BD
	148-150	BA
	151-153	BY
	154-156	B,UV
	157-159	BM
	160-162	BW
	163-165	B+UV, B
	166-168	B+UV, G
	169-171	B+UV, A
	172-174	B+W, B
	175-177	B+W, G
	178-180	B+W, A
	181-183	AD
	184-186	AY
	187-	A,UV

	189	
	190-192	AM
	193-195	AW
	196-198	YD
	199-201	Y,UV
	202-204	YM
	205-207	YW
	208-210	UV,D
	211-213	UV,M
	214-216	UV,W
	217-219	MD
	220-222	MW
	223-235	WD
	226-228	W,R+A
	229-231	W,R+W
	232-234	W,R+UV
	235-237	W,B+G
	238-240	W,B+W
	241-243	W,B+UV
	244-246	W,A+UV
	247-249	W,A+W
	250-255	W,R+G+A
5 (CH12)	0-127	Speed for Auto Programs(AUTO)
	128-255	Speed for Auto Programs(FADE)

CAD Drawings:

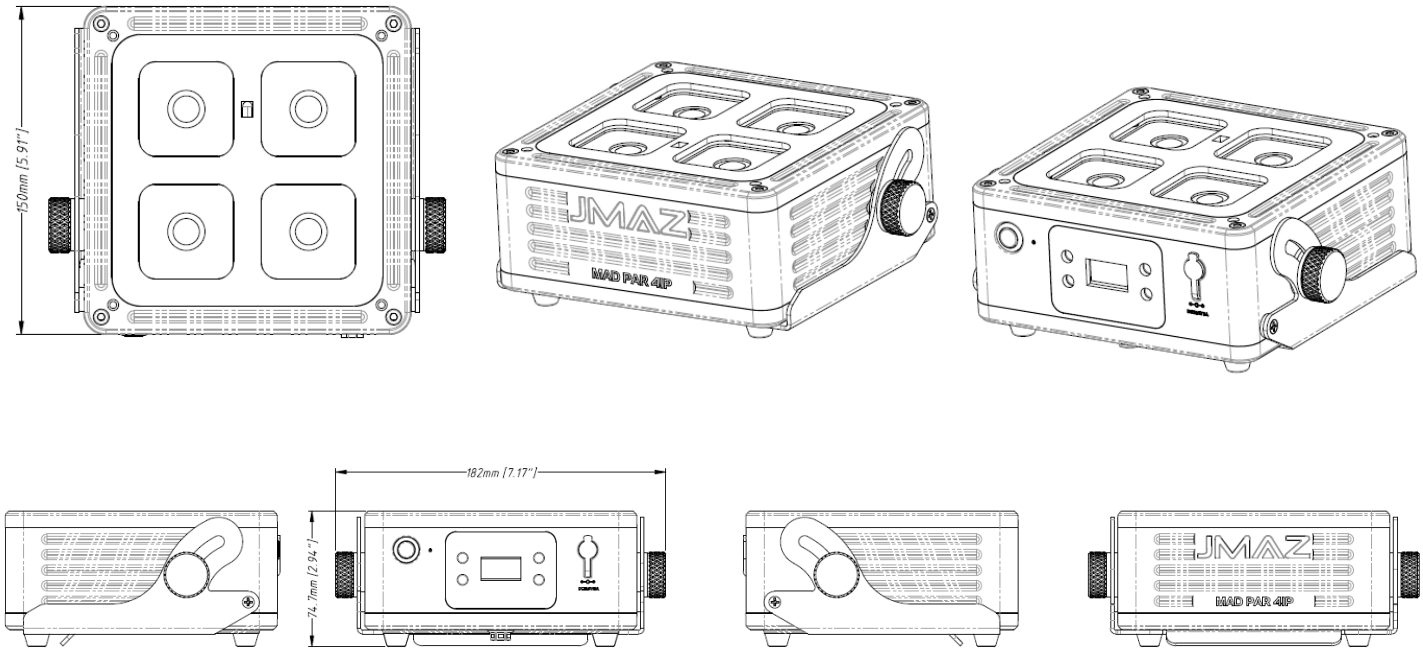

MAINTENANCE GUIDELINES

DISCONNECT POWER BEFORE PERFORMING ANY MAINTENANCE!

CLEANING

Frequent cleaning is recommended to ensure proper function, optimized light output, and an extended life. The frequency of cleaning depends on the environment in which the fixture operates: damp, smoky, or particularly dirty environments can cause greater accumulation of dirt on the fixture's optics. Clean the external lens surface regularly with a soft cloth to avoid dirt/debris accumulation.

NEVER use alcohol, solvents, or ammonia-based cleaners.

MAINTENANCE

Regular inspections are recommended to ensure proper function and extended life. There are no user serviceable parts inside this fixture. Please refer all other service issues to an authorized JMAZ service technician. Should you need any spare parts, please order genuine parts from your local JMAZ dealer.

Please refer to the following points during routine inspections:

A. A detailed electrical check by an approved electrical engineer every three months, to make sure the circuit contacts are in good condition and prevent overheating.

B. Be sure all screws and fasteners are securely tightened at all times. Loose screws may fall out during normal operation, resulting in damage or injury as larger parts could fall.

C. Check for any deformations on the housing, color lenses, rigging hardware, and rigging points (ceiling, suspension, trussing). Deformations in the housing could allow for dust to enter into the fixture. Damaged rigging points or unsecured rigging could cause the fixture to fall and seriously injure a person(s).

D. Electric power supply cables must not show any damage, material fatigue, or sediments.

NEVER remove the ground prong from the power cable.

SOFTWARE UPDATES

For software updates, please contact JMAZ service to obtain the latest firmware and detailed instructions. Refer to the Introduction section of this manual for contact information.

Scan for More

JMAZ®

2422 Lee Ave, South El Monte, CA - U.S.A.