SOUND DEVICES

ASTRAL

A20-HH

Digital Wireless Handheld Transmitter
with **GainForward**, **SpectraBand, and NexLink**

User Guide v8.00



Table of Contents

Welcome to the A20-HH Wireless Handheld Microphone....3
SpectraBand....4
NexLink Wireless Transmitter Control....4
GainForward....4
Interface Description....5
LEDs....7
Home Screen....8
Power....9
Identify (ID)....10
Menus....10
RF....10
Pair....10
Record....11
Mode....11
Privacy....11
Settings....12
Control Ring Settings....12
Display Settings....14
System Settings....15
Tuning the A20-HH and Receiver....16
Audio Levels - GainForward....16
Recording WAV Files....17
Jamming Timecode....17
File Transfer....18
Updating Firmware....18
A20-Remote App....19
SD-Utility....19
Accessories....20
Included Accessories....20
Optional Accessories....20
Swapping A20-HH Mic Capsules....21
Swapping A20-HH Control Rings....21
Frequency Authorization....22
A20-HH Specifications....23
CD1 (Capsule) Specifications....26
Servicing the A20-HH....27
Warranty....27
Patents....28
Legal Notices....28
Declaration of Conformity....31

Welcome to the A20-HH Wireless Handheld Microphone

The Sound Devices A20-HH Digital Wireless Handheld Mic is an exciting new option in the growing line of Sound Devices Astral® transmitters. In one attractive unit, the A20-HH has unrivaled sound quality, RF performance, and durability. Perfect for international tours or traveling gig to gig, the A20-HH can operate in any locale around the world. Available with Sound Devices' new calibrated dynamic mic capsule and natively compatible with any other manufacturer's mic capsule, it's the best of all worlds for the artist, the sound mixer, and the RF tech.

The A20-HH incorporates state-of-the-art features, such as NexLink remote control, Long Range modulation, GainForward, SpectraBand and more, to produce the best sound quality possible. The A20-HH is compatible with the A20-SuperNexus, A20-Nexus, and A20-Nexus Go digital receivers.

Key Features:

- Worldwide UHF tuning range from 470 MHz-1525 MHz.
- 10+ hours (10mW) runtime from standard 18650 Li-Ion battery
- Patent-pending wideband RocketAntenna design not affected when gripping mic at bottom.
- Reversible Capsule Collar - threaded to accept Shure- or Sennheiser-compatible mic capsule, no adapters needed.
- CD1 high-precision, fully-calibrated dynamic mic capsule for incredible mic-to-mic consistency.
- Long-distance NexLink remote control from the A20-SuperNexus, A20-Nexus, A20-Nexus Go and Web App.
- State-of-the-art 100% digital modulation delivers the longest transmission distance of any system on the market.
- RF Power output from 2 mW to 100 mW.
- GainForward Architecture – no gain control. Adjust gain at the mixer.
- Full 10 Hz - 20 kHz audio bandwidth.
- High headroom, ultra quiet mic preamp with > 140 dB dynamic range.
- Sunlight readable e-Paper screen for control and display. Display persists with no batteries
- Water resistant and extensive weather-sealing.
- USB-C for pairing with the A20-SuperNexus, A20-Nexus, A20-Nexus Go and for charging.
- Bluetooth for remote control from A20-Remote iOS/Android App and for wireless pairing.
- Built-in battery charging via USB-C.
- Inductive wireless charging (coming soon).
- Multiple, easily interchangeable Control Rings.
- Quick-change sleeve for easy decoration or complete change of mic appearance. Only 3 pieces, quick and easy to swap.
- Extremely rugged construction using die-cast magnesium, turned stainless steel, and high-impact strength polycarbonate.

Our friendly and knowledgeable support team, based in the USA and the UK, is here for all your questions and comments. Our job is to make your job easier.

Terminology used throughout this guide:

- *Astral Receiver refers to the A20-SuperNexus, A20-Nexus, and A20-Nexus Go multichannel receivers.*

SpectraBand

The A20-HH features SpectraBand, a technology that enables the A20-HH to tune over a super wide range of 470-1525 MHz. Tuning within this range varies by country. For instance:

In the USA, the available frequency ranges are:

- The entire UHF TV band (470-608 MHz)
- The 600 MHz guard band (614-616 MHz)
- The 600 MHz duplex gap (653-663 MHz)
- The 900 MHz ISM band (902-928MHz)
- The 950 MHz STL band (941.5-960 MHz)
- The 1.5 GHz AFTRCC band (1435-1525 MHz), with an appropriate license.

In the UK, the available frequency ranges are:

- The core UK UHF TV band (470-702 MHz)
- The 800 MHz duplex gap (823-832 MHz)
- The 800 MHz guard band (863-865 MHz)
- The DME bands (961-1015 MHz, 1045-1075 MHz, 1105-1154 MHz), with an appropriate license.
- The IMT band (1518-1525 MHz)

Please see https://www.sounddevices.com/available-frequencies/ for further detailed information on which frequency ranges are available for each country.

NexLink Wireless Transmitter Control

NexLink is a proprietary 2.4 GHz bidirectional wireless data link technology that allows multiple A20-HH transmitters to be controlled, monitored, and timecode synced from an Astral Receiver over long distances. NexLink is designed to offer robust and reliable control over distances far exceeding that of the wireless audio transmission, even in the presence of Wi-Fi, Bluetooth, and other 2.4 GHz interference. Astral Receivers can pair with up to 64 NexLinked transmitters at a time.

GainForward

The A20-HH transmitter supports GainForward, a technology that eliminates the need to adjust audio gain at the wireless transmitter. Audio levels from the transmitter are controlled either directly at the mixer's trim control or at the wireless receiver. If the source is too soft or too loud, adjust the transmitter's audio level with a downstream mixer's digital trim gain control. There is absolutely no noise penalty when the audio path remains 100% digital (i.e., A20 transmitter -> A20 receiver, A20 receiver digital audio output -> mixer digital audio input). Read more about GainForward at:
https://www.sounddevices.com/gainforward-explained/

Interface Description

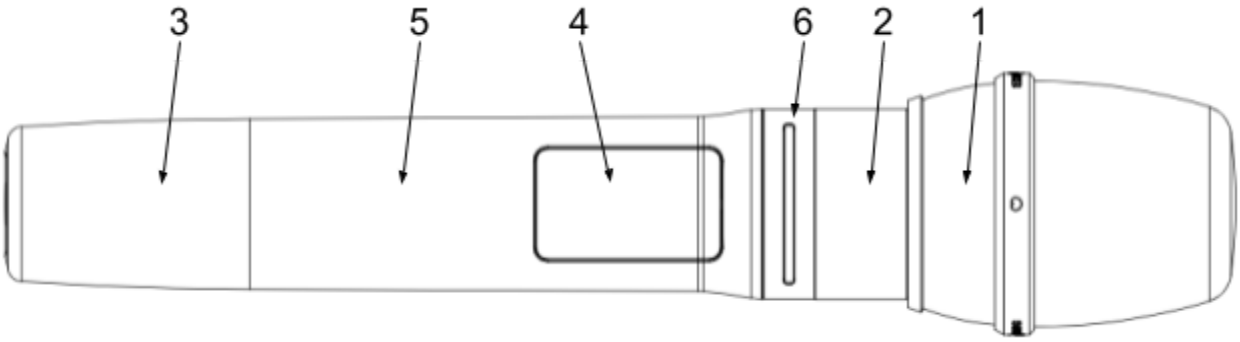

1: Interchangeable Microphone Capsule
Supplied with Sound Devices CD1 cardioid mic capsule. Unscrew counterclockwise to remove and gain access to the reversible capsule collar. The mic capsule manufacturer is briefly displayed in the ePaper display immediately after boot-up or several seconds after a capsule is screwed on.

2: Reversible Capsule Collar
Easy-to-reverse collar provides threads compatible with Sound Devices, Shure, and Sennheiser microphone capsules. Use the included hex screwdriver to unscrew the 3x screws. Remove, reverse, and reinstall the collar. Secure in place using the 3x screws removed earlier.

3: Antenna Section
470 - 1525 MHz omni RocketAntenna. Designed to be immune from signal loss due to hand covering lower part of mic body.

4: ePaper Display
For display of status, settings and menus. The Home screen displays Name, Frequency, Battery Remaining level, Modulation Type, RF Power, Record Status, Mute status, Privacy, Power Off, and Charging status. Displayed information persists even when batteries are removed. On boot-up, the display briefly shows the firmware version and fitted mic capsule type. The display incorporates a backlight for viewing in low light conditions. It turns on when booting up and when viewing any Menu. When in the Home Screen, press the power button to toggle the backlight on/off. The display illuminates different colors to indicate various operational states - setup in the Settings > Display > Disp LEDs menu. The display illuminates blue when no capsule is connected and the mic is on.

5: Body Shell
Unscrew counterclockwise to access the battery compartment, Micro SD card slot, power button, ePaper display navigation buttons, and USB-C port.

6: Control Ring
The A20-HH offers four easily-swappable Control Ring options allowing the user to choose the handheld's physical buttons/switches that suit their show's needs:

- **Control 0 (supplied as standard):** No external switch control; Incorporates a 6-segment multicolor LED bar for status display.
- **Control 1 (optional):** A single programmable button with multicolor status LED. Can be set to None, Mute, Record, Aux Latch, Aux Hold, RF On/Off, Power On/Off, Macro
- **Control 3 (optional):** Three programmable buttons each with multicolor status LED. Each can be set to None, Mute, Record, Aux Latch, Aux Hold, RF On/Off, Power On/Off, Macro
- **Control Switch (optional):** Latching slide switch with 6-segment multicolor LED bar. Can be set to None, Mute, Record, Aux Latch, RF On/Off, Power On/Off, Macro

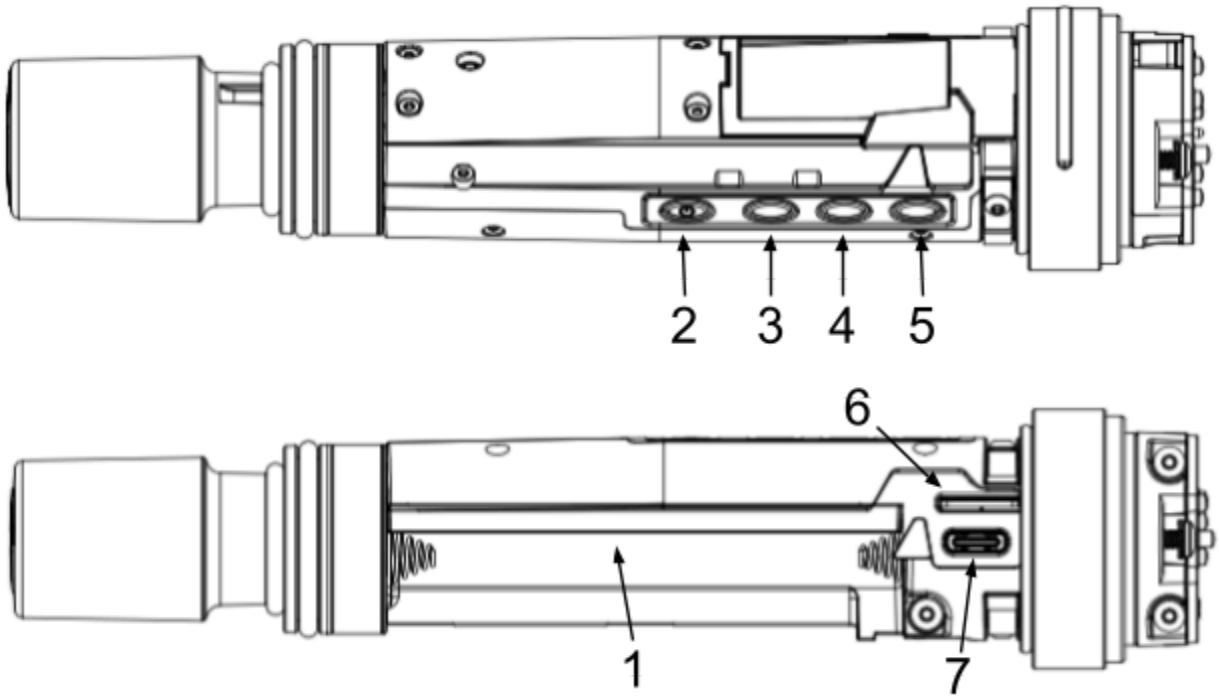

INTERNAL

Access the battery compartment, Micro SD card slot, power button, ePaper display navigation buttons, and USB-C port by unscrewing the microphone shell counter-clockwise.

1: Battery Compartment
Accepts one Sound Devices XL-B18650 battery. Ensure battery is inserted with the positive terminal and negative terminals facing the correct way.

2: Power Button
The red button is used to power the A20-HH on/off or exit from a menu.

- Power On = Press and release button.
- Power Off = Press and hold button until 'Off' is displayed.
- When in a menu, press to back out of that menu.
- When in the Home Screen, press to toggle the display backlight on and off.

3: Left Button
Press to navigate up or increase values.
When in the Home screen and in the RF Only mode, press the left button to jump straight to the RF Power menu.
When in the Home screen and in Rec Only mode, press the left button to jump straight to the Record menu.

4: Select Button
Press to select menu items and store values.

5: Right Button
Press to navigate down or decrease values.

6: Micro SD Card Slot
Insert a Micro SD for recording purposes. Format the card from the Settings > System > Format menu.

7: USB-C
For charging, pairing with Astral Receivers, and mounting to a computer for file transfer.

LEDs

When enabled to do so, the ePaper display and Control Ring multicolor LEDs illuminate to indicate various operational states. The LEDs can be set to show preferred information and can be disabled when needing to be inconspicuous.
See Settings for how to configure LEDs.

Setting	LED Color	Interface
Audio	Green (variable intensity)	Display
Battery	Green, Orange, Red, Flashing Red	Display, Control Ring
Charging	Flashing Green	Display
Mute On	Blue	Display, Control Ring
RF Off	Purple	Display, Control Ring
Recording	Red	Display, Control Ring
Aux On	Yellow	Display, Control Ring
Pairing	Flashing Blue	Display, Control Ring
ID'ing	Alternating Red, Green, Blue	Display, Control Ring
Firmware updating	Alternating Red, Green, Blue	Display, Control Ring
Timecode jamming	Blue pulse once per second, 10 times	Display
Timecode held when powered down	Blue pulse once per second	Display

Home Screen

The Home Screen is the default screen when the A20-HH is powered up. It displays the following information:

- Transmitter Name
- RF Frequency
- RF Power, Modulation
- Battery Level and Charging Status
- Mute Status
- Record Status (Rec Mode only)
- Privacy Status
- Firmware version and mic capsule type (displayed for several seconds after power up)

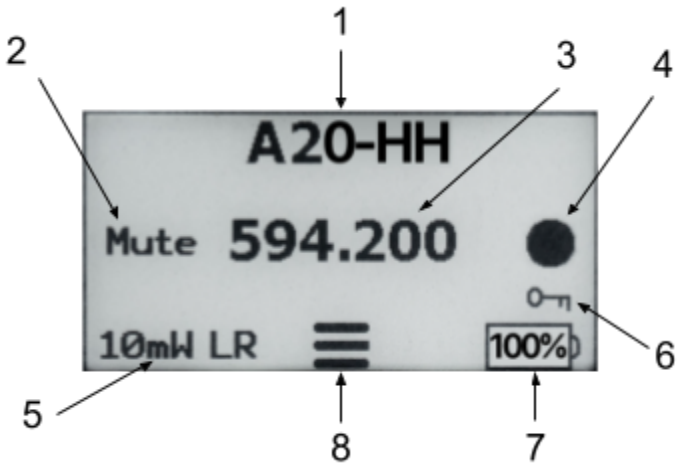

1: Handheld Transmitter Name
Displays the A20-HH's name (max.12 alphanumeric characters), making it easy to identify the user of the handheld transmitter (e.g. vocalist, presenter, etc.). The name is used as the volume name of the formatted Micro SD card and it is also embedded as track name metadata within the recorded files. By default, the A20-HH's serial number is assigned as the transmitter's name. The name can be edited wirelessly using an Astral Receiver, or A20-Remote. The Home Screen's Name and Frequency fields can be swapped. Select in the Settings>Display>Name menu.

2: Mute Status
Mute is displayed when the handheld's audio is muted.

3: Frequency / MHz
Displays the current transmission frequency.

4: Record Status
The record icon is displayed when the transmitter is recording.

5: RF Power and Modulation Type
Displays the current RF power and modulation type, LR (Long Range), Std (Standard), T&M (Test & Measurement).
When RF Mode is enabled and the handheld's shell is removed, tap the left button to jump directly to the RF Power menu.
Displays 'OFF' when the RF Power Level is set to Off via the Menu, via a Control Ring or via a NexLink command.

6: Privacy Status
The key icon is displayed when a privacy key is set.

7: Battery and Charging Status
Displays battery level. Displays USB when powered from a USB power pack.
When charging, a lightning icon is displayed next to the battery level.

8: Menu Icon
Remove the shell and press the middle button to access the menu. The display light is enabled when accessing the menu.

Power

The A20-HH is powered from a Sound Devices XL-B18650 Li-ion battery. Approximate battery run times are detailed in the following table:

RF Power/mW	Total Run Time
2	~ 12 hours
10	~ 10 hours
20	~ 9 hours
40	~ 7 hours
100	~ 6 hours
Recorder only	~ 15 hours

Inserting and Removing the Battery

1. Remove the handheld's shell.
2. Insert the 18650 battery into the battery compartment, negative side first. Take care to place in the correct orientation.
   Note: When inserting the battery, the A20-HH will remain powered off or will automatically power up depending on what the power state was when the A20-HH was previously shut down.
3. Press the red button to power on the A20-HH. Alternatively, a Control Ring button or switch can be programmed to power the A20-HH on and off.
4. After powering up, the A20-HH's firmware version and mic capsule type are briefly displayed.
5. To power off the A20-HH:
   a. Press and hold the red button until the Control Ring's LEDs go from 6 green LEDs to none.
   b. Press and hold any Control Ring button that is assigned to the Power command until the display stops flashing green.
   c. If the 'Control-Sw' Control Ring option is installed and the switch is assigned to the Power command, simply slide the switch to the Off position.
6. When powered off, the name and frequency continue to be displayed, even without a battery inserted.
7. To take out the battery, remove the shell, then lift out the battery, positive side first.

Battery Level

Remaining battery % is displayed in the Home screen's bottom right corner. Display LEDs and Control Ring LEDs can also be set to monitor remaining battery power. LED colors define remaining battery power as follows:

- Green = ≥ 30% remaining
- Orange = 30% remaining
- Red = 10% remaining
- Flashing Red = 0% remaining. RF and Audio are disabled at 0%

Charging from USB-C

Remove the shell and connect a USB power source to the A20-HH USB-C port.
When the battery is charging, the display flashes green and the charging icon comes on in the bottom right corner of the Home screen. Note that RF transmission is disabled during charging except when the USB power source is a portable USB battery pack.

Charging using an off-the-shelf Battery Charger

The A20-HH's XL-B18650 battery can also be charged using off-the-shelf battery chargers. We recommend the XTAR VC8S or for faster charging, the Vapcell S4 Plus v3.

Identify (ID)

When the A20-HH receives an ID command from an Astral receiver or the A20-Remote app:

- Display LEDs flash red, green, and blue
- Control Ring LEDs flash red, green, blue

This helps to identify which A20-HH is which when many are being used.

Menus

Access the Menu to make changes to the A20-HH's settings. To access the Menu, remove the A20-HH shell and press the middle button. The display illuminates white to facilitate navigation of the menu in low light conditions. If no button has been pressed for 30 seconds, the menu automatically exits back to the Home Screen. When in the Menu:

- Navigate menu items using the up/down arrows (left/right buttons).
- Select an item using the middle Select button.
- Back out of a submenu by using the red button.

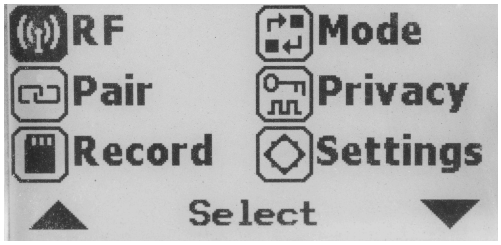

RF

Select the RF Menu to change the following settings:

- Frequency: Manually enter RF frequency. Frequency can be set from 470 MHz to 1525 MHz in 25 kHz steps.
- RF Power: Sets the A20-HH's RF transmit power. It is recommended to use the lowest RF power that gives the desired range. The lower the RF power the longer the battery run time.
    - 2mW Low Power
    - 10mW Normal Power
    - 20mW High Power
    - 40mW Very High Power*
    - 100mW Extra High Power*

      * Only available when the 'Extra High RF Power' option is enabled in A20-Remote or an Astral Receiver and there are no restrictions due to the current country of operation.
- Modulation: Sets the modulation mode. Ensure the receiver is set to the same modulation as the transmitter. Select from:
    - Long Range Provides best range at the expense of a little extra latency (3.9 ms)
    - Standard Standard range with lowest latency (2 ms)
    - T&M Flattest frequency and phase response for test & measurement applications (7 ms latency)
- RF On / RF Off: Toggles RF On and Off.

Pair

Select to wirelessly pair the A20-HH with the A20-Remote app or an Astral Receiver. Pairing is required to enable remote control of the A20-HH. During pairing, the display shows 'Pairing. Please wait …' and flashes blue. Once paired, the screen exits back to the Home screen. To cancel pairing, press the red button. See the A20-Remote and A20 Receiver User Guides for further information on how to pair. Pairing with an Astral Receiver can also be accomplished by connecting the USB-C port to the USB port on the receiver.

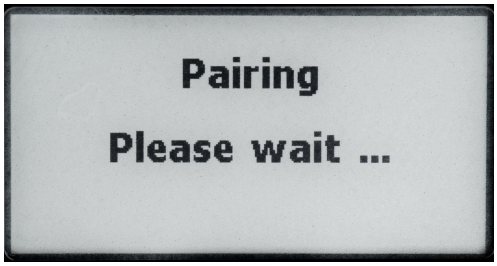

Record

The Record menu provides the ability to start and stop recording when in REC Only mode. Select Record to start recording. ‘Record’ changes to ‘Stop’ during recording. Select Stop to end recording. When set to RF Only mode, recording is not permitted. See Recording WAV Files for more information.

Mode

There are two modes of operation:

- RF Only: A20-HH operates as a transmitter
- REC Only: A20-HH operates as a recorder

Access the Mode menu to change the mode of operation.

Privacy

Creates a randomly generated 4-digit privacy key to prevent unauthorized reception of the A20-HH’s transmitted signal. An Astral Receiver must be set to the same 4-digit key to decode and receive the RF audio.



- New Key: Select ‘New Key’ then press ‘Set’ to generate a random 4-digit key. When the key is set, the home screen displays the privacy key icon.
- Clear: Select ‘Clear’ then press ‘Set’ to clear the key to 0000.

Settings

The A20-HH Settings menu provides access to the Control Ring, Display, and System setting sub-menus.

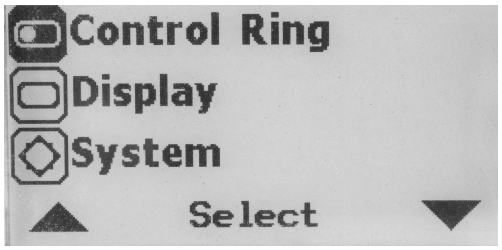

Control Ring Settings

Select Control Ring to access the Control Ring settings menu. To physically install a different Control Ring, see Swapping Control Rings.

1. **Control Ring Type**
   Highlight the top left setting and press Select to bring up the Control Ring type menu. Select the Control Ring type that is physically installed. This ensures that only the applicable LED and button settings for the installed Control Ring are listed in the menu. Selecting the wrong Control Ring type may result in unpredictable behavior. When selecting a new Control Ring type, its parameters are set to default.

2. **Control Options**
   The control options available are dependent upon the selected Control Ring type. A control may be a button (press/release action) or a switch (slide action). Select a Control to assign its function. The following table describes the options available for each Control Ring Type:

Control Ring Type	Available Controls	Assignable Commands	Control Ring LED Options
Control-0	No controls	None	Off Mute Rec Battery RF
Control-1	1 button	None Mute Record Aux Hold, Aux Latch Power Macro RF	Off Follow Button
Control-3	3 buttons: • Button-L • Button-C • Button-R	None Mute Record Aux Hold, Aux Latch Power Macro RF	Off Follow Button
Control-Sw	1 slide switch	None Mute Record Aux Latch Power Macro RF	Off Follow Sw Mute Rec RF Aux Battery

Assignable Commands

None: No function. This is the default setting for all controls.
Mute: Toggles mute on and off
Rec: Toggles record on and off (REC Only Mode)
Aux Hold, Aux Latch: Aux is typically used to activate a talkback audio path. The Aux command instructs the Astral Receiver to re-route the received A20-HH audio to a different output.

- Aux Hold: Aux is active only while the button is held. It is deactivated when released. This option is not available for the Control Switch option.
- Aux Latch: First press activates Aux, second press deactivates it. In the case of the Control Switch, Aux is activated when the switch is in the On position and deactivated when in the Off position.

Power: Turns the A20-HH on or off. A button must be held > 1 sec to power down. Note that when a control is assigned to Power, then Control Ring LEDs that are set to Follow Button or Follow Sw display battery level.
Macro: The macro command can be used to trigger a GPIO output on the A20-Opto when connected to the A20-SuperNexus. Macros can be used to initiate macros on a DiGiCo console or activate an alarm or LED or other peripheral over GPIO. There are up to four selectable macros, one for each control.

- Button-L macro
- Button-C macro
- Button-R macro
- Control-Sw macro

Note:

a. All assignable commands except for 'None' and 'Light' send the macro command even if it is a command local to the mic e.g. mute.
b. Set to 'None' to fully disable the control and prevent sending its macro.
c. Set to 'Macro' to only send the macro command but not instigate any function locally on the mic.

RF: Toggles RF power on and off.

Note Concerning the Control-Sw Ring Option
The Control Switch's physical slide switch setting is overridden by commands coming from the A20-HH interface, Astral Receiver (via NexLink) or A20-Remote (via Bluetooth), which will leave the switch in the incorrect physical position. As such, it is necessary to move the control switch first to the physical position that reflects the A20-HH's current state before it will perform its next command.

3. **LEDs (Control Ring)**
Select Control Ring > LEDs to configure the Control Ring LEDs. Each Control Ring type has a different LED configuration:

- Control-0: Multi-color 6-segment LED bar
- Control-1: One button with multi-color LED
- Control-3: Three buttons each with a multi-color LED
- Control-Sw: One slide switch with multi-color 6-segment LED bar

LED (Control Ring) Options

Off: Control Ring LEDs are disabled. This is the default setting.
Follow Button, Follow Sw (Control-1, Control-3, and Control-Sw ring types only):
Follows the action of the activated button / switch.
For example, if the Control-3 ring is installed:

- If Button-L is assigned to the Rec command, then when activated, the Button-L's LED turns red.
- If Button-C is assigned to the Mute command, then when activated, the Button-C's LED turns blue.
- If Button-R is assigned to the Power command, then when the A20-HH is on, the Button-R's LED shows battery level (green, orange, red, flashing red).

Mute (Control-0 and Control-Sw ring types only): 6-segment LED turns blue when muted.
Rec (Control-0 and Control-Sw ring types only): 6-segment LED turns red when recording.
Battery (Control-0 and Control-Sw ring types only): 6-segment LED displays battery level.
RF (Control-0 and Control-Sw ring types only): 6-segment LED turns purple when RF is off.
Aux (Control-Sw ring types only): 6-segment LED turns yellow when Aux is activated.

Display Settings

The Display menu offers settings related to the ePaper display.

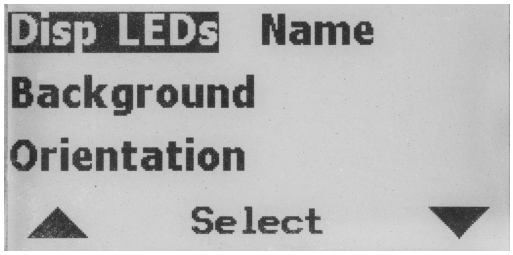

1. Display LEDs: Multicolor LEDs that can be configured to indicate various A20-HH states. Settings include:

    - Off (default) = Display LEDs are disabled.
    - Battery = Displays battery power remaining. See Power.
    - Audio = Displays microphone's audio level and mute status (Factory default).
    - Mute = Displays blue when muted.
    - Record = Displays red when recording.
    - RF Off = Displays purple when RF is turned off.
    - Aux On = Yellow when Aux is activated (not available when Control-0 ring is selected).

      The following states override the Display LED indications above:
        - Display flashes blue when pairing.
        - Display flashes green when charging.
        - Display pulses blue once on the zero-frame when the A20-HH is off and timecode count is active. Timecode continues counting accurately for 4 hours.
        - Display pulses blue for 10 seconds on the zero-frame when TC is jamming.
        - Display alternates red, green, and blue when the A20-HH is being ID'd.
        - Display rapidly flashes red, green, and blue when A20-HH firmware is being updated.

2. Background: Selects between light and dark display background colors.
3. Orientation: Allows the display to be flipped so it can be read easily in either orientation.
    - Normal
    - Flipped
4. Name: Selects whether the transmitter name is shown at the top or the center of the Home screen.

System Settings

Select to access the System menu.

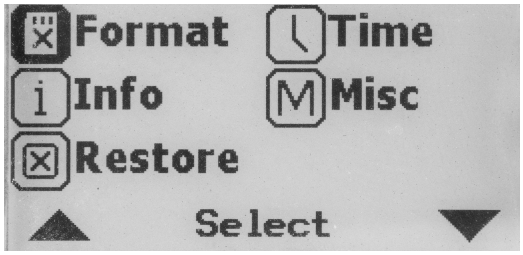

- **Format:** Select to format the inserted Micro SD card. Select 'OK' to start the formatting process. Once formatting is complete, 'Format Success' is displayed.
    - Micro SD Cards 64 GB or more are formatted as ExFAT. Recommended for long duration recording.
    - Micro SD Cards 32 GB or less are formatted as FAT32 (4GB file size limit). Max file recording time is approximately 6 hours.

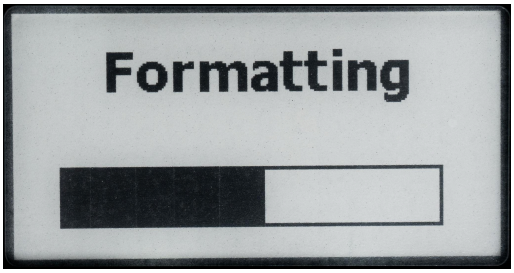

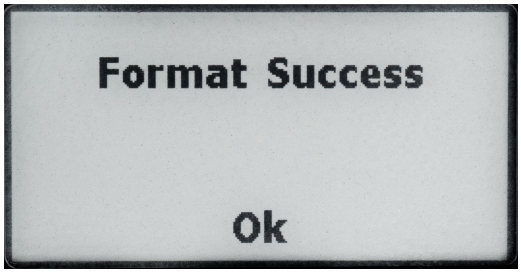

- **Info:** Displays the following information:
    - Serial number
    - Firmware version
    - FPGA version
    - Tuning bandwidth

- **Restore:** Select Restore to restore the A20-HH to factory default settings. Once default settings have been loaded, the A20-HH returns to the Home Screen.

- **Time:** Sets the A20-HH's date/time clock used for file creation time. Use the up/down arrows to set values for each field and the Set button to move to the next field. Pressing Set on the Minutes field saves the date/time setting.
  Note: When connection is established via NexLink, the date/time setting is overwritten by the A20 Receiver's date/time. When connection is established with A20-Remote and the transmitter's NexLink is disabled, the date/time setting is overwritten by the mobile device's date/time.

- **Misc:** Various miscellaneous settings including:
    - Resume Record: Automatically resumes recording on power up [On/Off]
    - Extra RF Power: Allows access to the extra high 40 mW and 100 mW RF power settings [Allow/Off]

- **FrAuth:** Displays Frequency Authorization information. Only Displayed if a Frequency Authorization is loaded. See Frequency Authorization for further details.

Tuning the A20-HH and Receiver

RF signals transmitted by the A20-HH transmitter are received by Astral Receivers and coming soon, the A20-RX and Audio Ltd A10-RX. Set the same modulation and frequency on the transmitter and receiver. See the A20-SuperNexus, A20-Nexus, and A20-Nexus Go User Guides for more details.

Frequency
The A20-HH transmits on frequencies ranging from 470 MHz – 1525 MHz. The frequencies available are determined by geographic location and whether you have loaded a unique Frequency Authorization (FA) code issued by Sound Devices to unlock the use of restricted frequencies. FAs can only be loaded via NexLink from an Astral receiver

Because the A20 digital RF transmission is inherently immune to intermodulation, multiple A20 Digital Wireless transmitters can be used simultaneously on nearby adjacent frequencies without worry of intermodulation interference. Frequency spacing between RF channels can be as little as 400 kHz. When operating in the 902-928 MHz Band, it is recommended to separate channel frequencies by at least 1 MHz.

Set the A20-HH's transmit frequency from the RF > Frequency menu or via the A20-Remote App or Astral Receiver via NexLink.

Modulation
The A20-HH offers three types of modulation, Long Range, Standard, and T&M (Test and Measurement). Long Range modulation has better sensitivity resulting in more robust performance in challenging RF environments. Standard modulation has lower latency (2ms versus the 3.9ms of Long Range). T&M modulation has been specifically optimized for the flattest frequency and phase response possible for test and measurement applications. The Modulation setting must match between the A20-HH and A20 receivers, in order for the transmitted signal to be received.

RF Power
RF power is the strength of the transmitting signal. The A20-HH offers the following RF power settings:

- 2 mW
- 10 mW
- 20 mW
- 40 mW *
- 100mW *

  *These RF Power settings only appear when System > Misc > 'Extra RF Power' is set to 'Allow'.

Set the A20-HH's RF Power from the RF > RF Power menu or via the A20-Remote App or Astral Receiver.

Available RF Power settings are dependent on the Country of operation and local frequency restrictions. The Country must be set using A20-Remote and an Astral Receiver.

In situations where the transmitter is relatively close to the receiver, the 2 mW setting offers good range and best battery life. For most common wireless microphone applications, the 10 mW setting provides excellent range. In situations where body absorption may be an issue or extended range is required, the 20, 40, and 100 mW settings can be helpful, but be aware that the higher the power, the lower the battery runtime.

Audio Levels - GainForward

The A20-HH transmitter supports GainForward, a technology that eliminates the need to adjust microphone preamplifier gain at the wireless transmitter. Audio levels from the transmitter are controlled either directly at the mixer's digital trim control or at the wireless receiver. If the source is too soft or too loud, adjust the transmitter's audio level with a downstream mixer's digital trim gain control. There is absolutely no noise penalty when the audio path remains 100% digital, i.e. A20 transmitter -> A20 receiver, A20 receiver digital audio output -> mixer digital audio input. Read more about GainForward at:
https://www.sounddevices.com/gainforward-explained/

The A20-HH's audio signal level can be viewed in the ePaper display when Disp LEDs is set to Audio. A variable intensity green LED indicates signal level.

Adjusting Audio of the A20-HH Signal from an Astral Receiver
See the A20-SuperNexus, A20-Nexus and A20-Nexus Go User Guides for details.

Adjusting Audio of the A20-HH Signal from the 8-Series
The A20-HH signal can be received and fed to an 8-Series mixer-recorder by docking an A20-Nexus or A20-Nexus Go to the 8-Series. Gain and low cut settings are managed on the 8-Series. See the mixer-recorder User Guides for more information.

Recording WAV Files

The A20-HH records 32-bit float Broadcast WAV (under 4 GB) or RF64 WAV (over 4 GB) files at 48 kHz sampling rates to a removable micro SD card (not included). 32-bit float files are recorded such that gain decisions can be made after recording. Because of the A20-HH's high dynamic range (>140 dB), audio levels are never too high or too low. Learn more about 32-bit float at: https://www.sounddevices.com/a20-mini-32-bit-float-recording/

The A20-HH must be set to REC Only Mode. It is not possible to simultaneously record and transmit.

A20-HH recording can be initiated in a number of ways including from the:

- A20-Remote App
- Astral Receivers via NexLink
- A20-HH Record menu or via a Control-1, Control-3, or Control-Sw Ring.

The file name format of recorded files is "transmitter name-YYMMDDHHMMSS.WAV".
For example, if the A20-HH name has been changed to "Barney" and a recording is created on July 10, 2021 at 09:30 (24 hour format), the resulting file is named Barney-210710093000.WAV. All files are recorded at the root of the Micro SD card.

About recording formats:

- The A20-HH records 1-ch monophonic 32 Bit float / 48 kHz wav files.
- For long duration recording, use a minimum Micro SD card size of 64 GB. Micro SD cards 64 GB or more are formatted as ExFAT which can record file sizes > 4 GB. Recordings that exceed 4 GB are automatically converted from standard broadcast wav to RF64 wav format.
- Micro SD cards 32 GB or less are formatted as FAT32 which have a 4 GB file size limit. When the 4 GB limit is reached, recording stops.

Jamming Timecode

In REC Only Mode, A20-HH recorded files are stamped with a start timecode value to make it easy to synchronize the audio with picture. The timecode can be wirelessly 'jammed' into the A20-HH's internal timecode generator via NexLink from an Astral Receiver. The timecode frame rate is automatically deciphered from the incoming timecode. If timecode is not jammed, the A20-HH starts rolling timecode from 00:00:00:00 when it is powered on.

Jammed timecode is held accurately for four hours after powering the A20-HH off, and one hour after the battery has been removed. This allows time to swap batteries without having to re-jam timecode. When the A20-HH is powered off with a charged battery inserted, the display pulses blue on the 00 frame crossing to indicate timecode is being held accurately.

When not being used with an Astral Receiver, timecode can be jammed into the A20-HH via USB-C. To jam timecode via USB-C, connect a valid LTC source using one of the optional accessories, Sound Devices XL-TC-USBC-LEMO or XL-TC-USBC-BNC, to the A20-HH USB-C port. Timecode is automatically jammed once a valid LTC source is connected. After a successful timecode jam, the display LED pulses blue ten times on the 00 frame crossing.

For more information about the A20-HH timecode accessory cables visit:
https://www.sounddevices.com/product/xl-tc-usbc-bnc/
https://www.sounddevices.com/product/xl-tc-usbc-lemo/

A20-HH can also jam timecode directly from 8-Series Mixer-Recorders using a standard USB-C to USB-A cable. Connect the A20-HH to the 8-Series USB-A port. Enter the 8-Series Menu > Timecode/Sync > Jam A20 Transmitter then select Jam A20. The 8-Series Jam A20 Transmitter menu displays the current timecode frame rate and values for the 8-Series and A20-HH and displays the difference between the two units.

File Transfer

Transfer recorded files to a computer via USB-C or Micro SD card.
The A20-HH connects via USB-C to a computer as an exFAT-formatted mass storage device. Copy WAV files from the A20-HH to the computer. When file transfer is complete, eject the drive from the operating system and disconnect USB.

Recording must be stopped on the A20-HH before connecting to the computer. While connected to a computer, RF transmission, audio, and recording are disabled.

Updating Firmware

Register your A20-HH to stay informed of firmware updates. https://my.sounddevices.com/

To update your A20-HH firmware:

1. Insert a Micro SD card in the A20-HH. Micro SD card is not included.
2. Format the Micro SD card. See Settings > System > Format.
3. Connect the A20-HH to the computer using a USB-C cable.
4. Download the A20-HH firmware update PRG file from: https://www.sounddevices.com/download/?prod=A20-HH
5. Copy the PRG file to the root of the A20-HH Micro SD card
6. Eject the A20-HH from the computer.

At this point, 'Updating firmware. Please wait …' is displayed and all the LEDs "dance" to indicate the firmware update is in progress. Once the update is completed, "Update successful. Rebooting …' is displayed and the A20-HH reboots. The firmware update can take a few minutes to complete.

When the firmware update completes, the A20-HH automatically deletes the PRG file from the Micro SD card. The firmware version is displayed for a few seconds on the Home Screen after powering up. It is also displayed in the A20-Remote App's Manage Devices view, the A20-HH's Settings>System>Info menu, and in the Astral Receiver's TX List >TX View.

A20-Remote App

A20-Remote is an application for Android/iOS phones and tablets designed to pair with Astral A20 (A20-HH, A20-TX, A20-Mini) transmitters. All transmitter settings are conveniently controlled using A20-Remote.

Please refer to the A20-Remote User Guide for complete operational details
https://sounddevices.com/guides/a20-remote



When connected via Bluetooth LE to the A20-HH, A20-Remote offers control and display of all A20-HH parameters, including:

- Power on and off the A20-HH
- Monitor battery status
- Frequency, Modulation, and RF power setup
- Monitor audio signal presence
- Microphone mute
- Transport controls (Record, Stop)
- Timecode display
- Media formatting and monitoring of remaining space
- A20-HH settings (Mode, Display, LEDs, Control Rings, and more)
- Group control of powering, recording, and more

Download and install the A20-Remote app from the Google Play Store or Apple App Store.
https://www.sounddevices.com/a20-remote

A20-Remote has the following minimum operating requirements: Android tablets and phones running Android 8+, or iPad and iOS devices running iOS 13+. The device must have Bluetooth and Location Services on in order to connect with an A20 Transmitter.

IMPORTANT: The mobile device's location is used to determine available frequencies and RF power levels of the A20-HH transmitter. The Country setting is automatically set using the mobile device's Location Services.

The mobile device's system date and time are used in the metadata of recorded files.

SD-Utility

Sound Devices SD-Utility is a companion application for MacOS and Windows that supports Sound Devices wireless products. This application can be used to process files recorded by A20 transmitters to be more suited to a given workflow. A20 transmitter 32-bit float, 48 kHz, monophonic WAV, 2ch polyphonic WAV, and RF64 WAV files can be imported, renamed, snipped by timecode values, converted to 24 bit, conformed to a CSV Sound Report, exported as monophonic or polyphonic WAV, and more.

Please refer to the SD-Utility User Guide for complete install and operational details
https://sounddevices.com/guides/sd-utility



Accessories

Included Accessories

The A20-HH package includes the following:

- A20-HH handheld microphone/transmitter fitted with:
  - Control 0 Ring
  - CD1 cardioid mic capsule
  - Reversible Capsule Collar
- A20-HH Pouch
- A20-HH Counterweight-30
- 1x XL-B18650 Li-ion battery x2 pack (with small soft case)
- Mic clip
- Threaded adapter for mic clip
- USB-A to C cable, 1 Meter

Optional Accessories

- Control 0 Ring
- Control 1 Ring
- Control 3 Ring
- Control Switch Ring
- Reversible Capsule Collar
- CD1 cardioid mic capsule
- Replacement orange and black internal capsule windscreens.
- Microphone shell
- Carry pouch
- Counterweight

Note: Accessory bundles are also available.

Swapping A20-HH Mic Capsules

The A20-HH is compatible with a wide array of different mic capsules

- Sound Devices CD1 cardioid mic capsule (included)
- Any capsule that fits a Shure wireless handheld transmitter
- Any capsule that fits a Sennheiser wireless handheld transmitter



The mic capsules are easily removed by simply unscrewing them counterclockwise.
The Reversible Capsule Collar can be flipped over to support either Shure or Sennheiser-threaded mic capsules.
Sound Devices and Sennheiser mic capsules have the same thread, indicated by the thicker orange ring inset. Shure mic capsules have a different thread, indicated by the thinner orange ring inset.

Reversing the capsule collar to accommodate a mic capsule with different thread type

1. With the left hand gripping the Reversible Capsule Collar and the right hand gripping the mic capsule, unscrew the mic capsule by rotating counterclockwise.
2. Remove the Reversible Capsule Collar's three screws using a #0 Phillips screwdriver.
3. Remove the collar, flip it over and screw back into place using the three screws removed earlier.
4. Screw on the mic capsule.

Swapping A20-HH Control Rings

The A20-HH has 4 easily swappable Control Ring options:

- Control 0 Ring (supplied as standard)
- Control 1 Ring (optional)
- Control 3 Ring (optional)
- Control Switch (optional)

Swapping out one Control Ring for another

1. With the left hand gripping the Reversible Capsule Collar and the right hand gripping the mic capsule, unscrew the mic capsule by rotating counterclockwise.
2. Remove the Reversible Capsule Collar's three screws using a #0 Phillips screwdriver.
3. Remove the collar.
4. Remove the microphone shell: rotate it clockwise a few degrees, then pull it out a few mm until it won't pull any further, then rotate it back while continuing to pull.
5. Slowly ease off the Control Ring from the microphone's body noting that the ring's inner rubber sleeve will offer some resistance to removal. Slightly wiggle the ring to help ease off the Control Ring.
6. Before fitting the new Control Ring, place the Reversible Capsule Collar on top of the new ring making sure that the collar fits over the ring's protruding inner rubber sleeve.
7. While gripping the Reversible Capsule Collar and Control Ring together with one hand, ease them on to the microphone's body making sure to:
    a. Align the ring correctly with the microphone body's switch contacts.
    b. Align the collar's 3 mounting holes with the mic body's screw holes.
8. Screw the Reversible Capsule Collar back into place using the three screws removed earlier.
9. Screw on the mic capsule.
10. Power up the A20-HH.

In the Settings > Control Ring menu, select the applicable Control Ring type. Each time Control Ring Type is changed, its settings revert to factory defaults so be sure to configure buttons, switches, and LEDs as required.

Frequency Authorization

The wireless system operator needs to be aware of local regulations and comply with all applicable laws regarding operation of wireless devices.

Frequency Authorizations allow the unlocking of restricted frequencies that require proof of a valid license before they can be used. Once a license has been granted, please contact Sound Devices (RF_Request@SoundDevices.com) to obtain the necessary authorization. An Authorization ID and License Code will be generated by Sound Devices based on the license provided. The Authorization ID or License Code can be entered into the A20-Remote App and then synchronized with an Astral Receiver and its paired A20 transmitters.

An example of a frequency band requiring an unlock code in the United States is 1435-1525 MHz. Program Making and Special Events (PMSE) wireless operators typically call 1435-1525 MHz the "AFTRCC band". AFTRCC stands for Aerospace and Flight Test Band Coordinating Council. This organization coordinates a number of frequency bands for use by air and spacecraft in the United States. This includes 1435-1525 MHz.

Per the United States Federal Communications Commission (FCC) rules, wireless microphones are allowed as secondary users in the 1435-1525 MHz AFTRCC band. This is detailed in the FCC Part 74 rules:

https://www.ecfr.gov/current/title-47/chapter-I/subchapter-C/part-74

One section of the Part 74 rules that's of particular interest to operators seeking an AFTRCC band license is 74.803(d):

https://www.ecfr.gov/current/title-47/chapter-I/subchapter-C/part-74#p-74.803(d)

Generally speaking, a wireless operator needs to show they've used all other available spectrum before the AFTRCC will consider a license request in the 1435-1525 MHz range. If granted, the license is normally assigned for a specific location and a specific time range.

Sound Devices encourages all wireless operators to obtain a Part 74 license, and specifically to make sure applicable parts of the 600 MHz and 950 MHz range are included with their license application. This can help show an operator is aware of the available spectrum and is utilizing it responsibly.

More information on Part 74 licensing can be found here: https://www.local695.com/fcc-licensing/

A20-HH Specifications

Specifications are subject to change without prior notice. For the latest information available on all Sound Devices products, visit our website: www.sounddevices.com.

Frequency Range
- 470 to 1525 MHz
- Transmitter tunable in 25 kHz steps
- Available frequencies are dependent on region

RF Output Power
- Off, 2 mW, 10 mW, 20 mW, 40 mW, 100 mW

Modulation Mode
- Proprietary, 100% digital RF modulation
- Standard, Long Range, T&M, selectable

Latency - Mic capsule to Receiver analog output
- Standard (2 ms)
- Long Range (3.9 ms)
- T&M (7 ms)

Antennas
- RF: 470-1525 MHz : Built-in
- NexLink 2.4 GHz: Built-in

Audio Frequency Response
- 10 Hz - 20 kHz, +/- 1 dB re 1 kHz

Audio Input (Mic capsule)
- Compatible with Sound Devices CD1, Shure-style, or Sennheiser-style mic capsule
- Bias power with Shure-style: 5V
- Bias power with Sennheiser-style: 10V
- EIN: -128 dBV (A-weighting)
- Dynamic range: >140 dB

Counterweight
- Internal counterweight available to balance out heavy microphone capsules

Menu and Controls
- e-Paper screen highly visible in direct sunlight
- e-Paper screen holds display image without battery power
- Power button and three navigation buttons protected inside battery compartment

Control Rings
- 4 types available:
  - Control 0, supplied with A20-HH, no buttons
  - Control 1, optional, one push button
  - Control 3, optional, three push buttons
  - Control Switch, optional, one slide switch
- User changeable

Remote Control
- A20-Remote Android, iOS, and iPad app via Bluetooth 5.2 LE
- Astral Receivers via super-long-range NexLink

Recording Media
- Micro SD Card
- Media format: ExFAT for Micro SD cards 64GB or more, FAT32 for Micro SD cards 32GB or less
- Selectable Record Only Mode or RF Only Mode. Recording is not possible when transmitting audio.

Recording File Format

- 32 Bit Float, 48 kHz, Monophonic wav
- Broadcast WAV (<4 GB), RF64 WAV (>4 GB)

Timecode

- Sync wirelessly over NexLink (from an Astral Receiver)
- 0.2 ppm accuracy
- Holds accurate clock for four hours while powered down with batteries inserted, holds for one hour without batteries via internal supercapacitor
- Auto Jams timecode via USB-C connector or wirelessly via NexLink

Timecode Frame Rates

- 23.98, 24, 25, 29.97 DF, 29.97 ND, 30 DF, 30 ND
- Frame rates are auto-detected from incoming source

USB-C

- Mass Storage (USB-C): USB 2.0 high speed for file transfer of internal microSD card recordings
- Charges XL-B18650 Li-ion battery inserted in A20-HH
- Pairing to Astral Receivers

Powering

- Sound Devices XL-B18650 Li-Ion battery

Battery Charging

- Built-in charging of battery via USB-C
- Inductive charger dock for A20-HH (coming soon)
- Battery can be removed and charged in any standard 18650 battery charger

Battery Runtime

- Approx 10 hours at 10 mW RF output power. See Power
- Unit can be completely powered off remotely via app or via NexLink to extend battery runtime

Environmental

- Operating: -10° C to 40° C
- Storage: -40° C to 85° C
- Water resistant

Dimensions and Weight

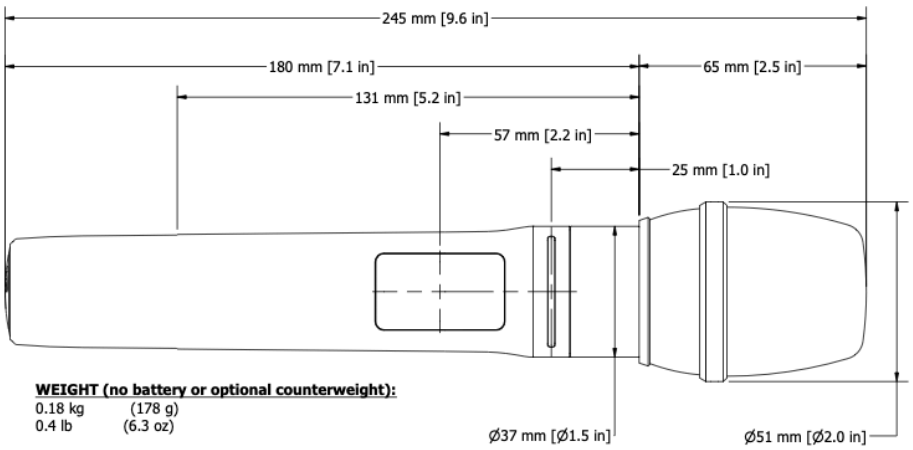

WEIGHT (no battery or optional counterweight):
0.18 kg (178 g)
0.4 lb (6.3 oz)

WEIGHT (with battery):
0.23 kg (226 g)
0.5 lb (8.1 oz)

OPTIONAL COUNTERWEIGHT:
0.03 kg (30 g)
0.1 lb (1.1 oz)

DIMENSIONS HxWxD (no mic head):
18.0 cm x 3.7 cm x 3.7 cm (180 mm x 37 mm x 37 mm)
7.1 in x 1.5 in x 1.5 in

DIMENSIONS HxWxD (with mic head):
24.5 cm x 5.1 cm x 5.1 cm (245 mm x 51 mm x 51 mm)
9.6 in x 2.0 in x 2.0 in

CD1 (Capsule) Specifications

Type

- Dynamic mic, moving coil
- Dual diaphragm, dual voice coil
- 100% swept and calibrated at factory

Polar pattern

- Cardioid

Frequency response

- 50 – 15,000 Hz

Output Impedance

- 600 ohms

Sensitivity

- -54 dBV/Pa

Max Acoustic Level

- >140 dB SPL

Servicing the A20-HH

Do not attempt to service the A20-HH. The case is water-sealed and needs to have new gaskets installed if taken apart. The internal parts are microscopic and not user serviceable. Please send to Sound Devices for any service needs.
https://service.sounddevices.com/contact-support/

Warranty

Sound Devices, LLC warrants the items listed above against defects in materials and workmanship for a period of ONE (1) year from date of original retail purchase. Users who register their product directly with Sound Devices Technical Support using the online form or by phone, will receive an additional ONE (1) year of warranty coverage, extending the complete warranty period to TWO (2) years from the date of original retail purchase. In order to extend the warranty coverage period, registration must be completed within the initial ONE (1) year warranty period. Products must be purchased through authorized Sound Devices resellers to qualify for Warranty coverage. Damage resulting from the opening of a Sound Devices product or attempted repairs by a non-authorized Sound Devices repair technician will void warranty coverage.

This is a non-transferable warranty that extends only to the original purchaser. Sound Devices, LLC will repair or replace the product at its discretion at no charge. Warranty claims due to severe service conditions will be addressed on an individual basis.

THE WARRANTY AND REMEDIES SET FORTH ABOVE ARE EXCLUSIVE. SOUND DEVICES, LLC DISCLAIMS ALL OTHER WARRANTIES, EXPRESS OR IMPLIED, INCLUDING WARRANTIES OF MERCHANTABILITY AND FITNESS FOR A PARTICULAR PURPOSE. SOUND DEVICES, LLC IS NOT RESPONSIBLE FOR SPECIAL, INCIDENTAL, OR CONSEQUENTIAL DAMAGES ARISING FROM ANY BREACH OF WARRANTY OR UNDER ANY OTHER LEGAL THEORY. Because some jurisdictions do not permit the exclusion or limitations set forth above, they may not apply in all cases.

For all service, including warranty repair, please contact Sound Devices for an RMA (return merchandise authorization) before sending your unit in for repair. Product returned without an RMA number may experience delays in repair. When sending a unit for repair, please do not include accessories, including SSD drives, CF cards, batteries, power supplies, carry cases, cables, or adapters unless instructed by Sound Devices. Sound Devices repairs and replacements may be completed using refurbished, returned or used parts that have been factory certified as functionally equivalent to new parts.

Sound Devices, LLC

Services Repair RMA #XXXXX

E7556 State Road 23 and 33
Reedsburg, WI 53959 USA
Telephone: +1-608-524-0625

Patents

This product is covered under patent number 9,654,134 and other patents pending.

Legal Notices

Product specifications and features are subject to change without prior notification. Read and fully understand this manual before operation.

Copyright© 2024 Sound Devices, LLC. All rights reserved. This product is subject to the terms and conditions of a software license agreement provided with the product, and may be used in accordance with the license agreement. This document is protected under copyright law. An authorized licensee of this product may reproduce this publication for the licensee's own personal use. This document may not be reproduced or distributed, in whole or in part, for commercial purposes, such as selling copies or providing educational services or support. This document is supplied as a technical guide. Special care has been taken in preparing the information for publication; however, since product specifications are subject to change, this document might contain omissions and technical or typographical inaccuracies. Sound Devices, LLC does not accept responsibility for any losses due to the use of this guide.

LIMITATION ON SOUND DEVICES' LIABILITY. TO THE FULLEST EXTENT PERMITTED BY LAW, SOUND DEVICES SHALL HAVE NO LIABILITY TO THE END USER OR ANY OTHER PERSON FOR COSTS, EXPENSES, DIRECT DAMAGES, INCIDENTAL DAMAGES, PUNITIVE DAMAGES, SPECIAL DAMAGES, CONSEQUENTIAL DAMAGES OR OTHER DAMAGES OF ANY KIND OR NATURE WHATSOEVER ARISING OUT OF OR RELATING TO THE PRODUCTS, THESE TERMS AND CONDITIONS OR THE PARTIES' RELATIONSHIP, INCLUDING, WITHOUT LIMITATION, DAMAGES RESULTING FROM OR RELATED TO THE DELETION OR OTHER LOSS OF AUDIO RECORDINGS OR DATA, REDUCED OR DIMINISHED AUDIO QUALITY OR OTHER SIMILAR AUDIO DEFECTS ARISING FROM, RELATED TO OR OTHERWISE ATTRIBUTABLE TO THE PRODUCTS OR THE END USER'S USE OR OPERATION THEREOF, REGARDLESS OF WHETHER SUCH DAMAGES ARE CLAIMED UNDER CONTRACT, TORT OR ANY OTHER THEORY. "CONSEQUENTIAL DAMAGES" FOR WHICH SOUND DEVICES SHALL NOT BE LIABLE SHALL INCLUDE, WITHOUT LIMITATION, LOST PROFITS, PENALTIES, DELAY DAMAGES, LIQUIDATED DAMAGES AND OTHER DAMAGES AND LIABILITIES WHICH END USER SHALL BE OBLIGATED TO PAY OR WHICH END USER OR ANY OTHER PARTY MAY INCUR RELATED TO OR ARISING OUT OF ITS CONTRACTS WITH ITS CUSTOMERS OR OTHER THIRD PARTIES. NOTWITHSTANDING AND WITHOUT LIMITING THE FOREGOING, IN NO EVENT SHALL SOUND DEVICES BE LIABLE FOR ANY AMOUNT OF DAMAGES IN EXCESS OF AMOUNTS PAID BY THE END USER FOR THE PRODUCTS AS TO WHICH ANY LIABILITY HAS BEEN DETERMINED TO EXIST. SOUND DEVICES AND END USER EXPRESSLY AGREE THAT THE PRICE FOR THE PRODUCTS WAS DETERMINED IN CONSIDERATION OF THE LIMITATION ON LIABILITY AND DAMAGES SET FORTH HEREIN AND SUCH LIMITATION HAS BEEN SPECIFICALLY BARGAINED FOR AND CONSTITUTES AN AGREED ALLOCATION OF RISK WHICH SHALL SURVIVE THE DETERMINATION OF ANY COURT OF COMPETENT JURISDICTION THAT ANY REMEDY HEREIN FAILS OF ITS ESSENTIAL PURPOSE.

The "wave" logo is a registered trademark of Sound Devices, LLC. Windows is a registered trademark of Microsoft Corporation in the U.S. and other countries. Bluetooth LE is a registered trademark of Bluetooth SIG, Inc. Android is a registered trademark of Google. iPad, iPhone, and iOS are registered trademarks of Apple Inc. All other trademarks herein are the property of their respective owners.

FCC Conformity

This device complies with part 15 of the FCC Rules. Operation is subject to the following two conditions:
(1) This device may not cause harmful interference, and
(2) this device must accept any interference received, including interference that may cause undesired operation.
Changes or modifications not expressly approved by the manufacturer could void the user's authority to operate the equipment.

Warning! Any modifications or changes made to this device, unless explicitly approved by Sound Devices may invalidate the authorization of this device. Operation of an unauthorized device is prohibited under Section 302 of the Communications act of 1934, as amended, and Subpart 1 of Part 2 of Chapter 47 of the Code of Federal Regulations.

This device must be installed by trained professionals.

FCC Radiation Exposure Statement
This equipment complies with FCC radiation exposure limits set forth for portable conditions. In accordance with FCC requirements, this device has been tested and found to comply with radiation exposure limits for portable conditions.

ISED Radiation Exposure Statement
This equipment complies with ISED radiation exposure limits set forth for portable conditions. This device complies with the Specific Absorption Rate (SAR) requirements at a distance of 0mm.

Cet équipement est conforme aux limites d'exposition aux rayonnements ISED établies pour des conditions portables. Cet appareil est conforme aux exigences de débit d'absorption spécifique (SAR) à une distance de 0 mm.

This device has been approved to operate with the antenna types listed below:

Sound Devices Part #	Frequency Band	Maximum Gain	Impedance
9162.001	470-548 MHz	+2.15 dBi	50 ohms
11225.000	548-608 MHz, 614-616 MHz, 653-657 MHz, 657-663 MHz	+2.66 dBi	50 ohms
28255.000	902-928 MHz, 941.5-952 MHz, 952.85-956.25 MHz, 956.45-959.85 MHz	+3.47 dBi	50 ohms
28257.000	1435-1525 MHz	+2.15 dBi	50 ohms

FCC Interference Statement
This equipment has been tested and found to comply with the limits for a Class B digital device, pursuant to Part 15 of the FCC Rules. These limits are designed to provide reasonable protection against harmful interference in a residential installation. This equipment generates uses and can radiate radio frequency energy and, if not installed and used in accordance with the instructions, may cause harmful interference to radio communications. However, there is no guarantee that interference will not occur in a particular installation. If this equipment does cause harmful interference to radio or television reception, which can be determined by turning the equipment off and on, the user is encouraged to try to correct the interference by one or more of the following measures:

- Reorient or relocate the receiving antenna
- Increase the separation between the equipment and receiver
- Connect the equipment into an outlet on a circuit different from that to which the receiver is connected
- Consult the dealer or an experienced radio/TV technician for help

Industry Canada Conformity
This device operates on a no-interference, no-protection basis. Should the user seek to obtain protection from other radio services operating in the same TV bands, a radio license is required. For further details, consult Innovation, Science and Economic Development Canada's Client Procedures Circular CPC-2-1-28, Voluntary Licensing of Licence-Exempt Wireless Microphones in the TV Bands.

This radio transmitter 22225-9808 has been approved by Innovation, Science and Economic Development Canada to operate with the antenna types listed below, with the maximum permissible gain indicated. Antenna types not included in this list that have a gain greater than the maximum gain indicated for any type listed are strictly prohibited for use with this device.

Sound Devices Part #	Frequency Band	Maximum Gain	Impedance
9162.001	470-548 MHz	+2.15 dBi	50 ohms
11225.000	548-608 MHz, 614-616 MHz, 653-657 MHz, 657-663 MHz	+2.66 dBi	50 ohms
28255.000	902-928 MHz, 941.5-952 MHz, 952.85-956.25 MHz, 956.45-959.85 MHz	+3.47 dBi	50 ohms
28257.000	1435-1525 MHz	+2.15 dBi	50 ohms

The transmitter is supplied with the above unique antenna types; to replace a lost, damaged or faulty antenna, please contact Sound Devices, LLC.

This Device complies with Industry Canada Licence-exempt RSS standard(s). Operation is subject to the following two conditions:
1) this device may not cause interference, and
2) this device must accept any interference, including interference that may cause undesired operation of the device.

Conformité à Industrie Canada
Cet appareil opère selon un régime de non-brouillage et de non-protection. Si l'utilisateur veut obtenir une protection par rapport aux autres services radio opérant sur les mêmes bandes TV, une licence radio est requise. Pour plus de détails, veuillez consulter le circulaire de procédures client CPC-2-1-28 Délivrance de licenses sur une base volontaire pour les microphones sans fils exempts de licence exploités dans les bandes de télévision, publié par Innovation, Sciences et Développement économique Canada.

Ce transmetteur radio 22225-9808 a été approuvé par Innovation, Sciences et Développement économique Canada pour opérer avec les types d'antennes listés ci-dessous, avec gain maximum permissible indiqué. Les types d'antennes non inclus dans cette liste et dont le gain excède le gain maximum indiqué sur n'importe quel type listé ci-dessous sont strictement prohibés d'utilisation avec cet appareil.

Sound Devices Part #	Frequency Band	Maximum Gain	Impedance
9162.001	470-548 MHz	+2.15 dBi	50 ohms
11225.000	548-608 MHz, 614-616 MHz, 653-657 MHz, 657-663 MHz	+2.66 dBi	50 ohms
28255.000	902-928 MHz, 941.5-952 MHz, 952.85-956.25 MHz, 956.45-959.85 MHz	+3.47 dBi	50 ohms
28257.000	1435-1525 MHz	+2.15 dBi	50 ohms

Ce transmetteur est fourni avec les types d'antenne unique ci-dessus; pour remplacer une antenne perdue, endommagée ou défectueuse, veuillez contacter Sound Devices, LLC.

Cet appareil est conforme aux normes CNR exemptes de licence d'Industrie Canada. Son fonctionnement est soumis aux deux conditions suivantes:
1) ce dispositif ne peut pas causer d'interférences, et
2) ce dispositif doit accepter toute interférence, y compris les interférences qui peuvent causer un mauvais fonctionnement de l'appareil.

USA White-Space Operation
For USA operation in the 600 MHz guard band (614-616 MHz) and 600 MHz duplex gap (657 - 663 MHz) users are advised to register with and check a white-space database to determine available channels prior to operation at a given location.

WEEE Statement
If you wish to discard a Sound Devices product in Europe, contact Sound Devices (England) for further information.



Battery Advisory
Incorrect use of batteries poses a danger of explosion. Replace only with the same or equivalent type. Properly recycle batteries. Do not crush, disassemble, incinerate, dispose of in a fire, or expose batteries to high temperatures.

Declaration of Conformity

CE

Manufacturer's Name: Sound Devices, LLC
Manufacturer's Address: E7556 State Road 23 and 33 Reedsburg, WI 53959 USA

We, Sound Devices, LLC, declare under our sole responsibility that the product

Product Name:	A20-HH
Model Number:	9808
Description:	Digital Wireless Handheld Microphone Transmitter

is in conformity with the essential requirements of the following relevant Union harmonisation legislation:

Radio Equipment Directive (RED)	2014/53/EU
Low Voltage Directive	2014/35/EU
RoHS Directive	2011/65/EU

The following harmonised standards and/or normative documents were applied:

Health & Safety (Article 3.1(a) of RED)	EN 62368-1:2014 EN 50566:2017
EMC (Article 3.1(b) of RED)	EN 301-489-1 v2.2.3:2019 EN 301-489-9 v2.1.1:2019 EN 301-489-17 v3.2.4:2020
RF Spectrum (Article 3.2 of RED)	EN 300 422-1 v2.2.1:2021 EN 300 328 v2.2.2:2019 EN 300 440 v2.1.1:2017

Signed for and on behalf of Sound Devices LLC:

Nov 20, 2024

Date

Matt Anderson - Sound Devices, LLC President