MAGNUS REX

VT-5000-CM

5000H/TL750C

Two-Stage Carbon Fiber
Video Tripod with Fluid Head



Owner's
Manual

Thank you for choosing Magnus.

The Magnus REX VT-5000-CM tripod is designed with advanced features that professional videographers and cinematographers need for their camera support systems and shooting styles. It's constructed with sturdy, lightweight carbon fiber legs with a single-action leg lock, providing a stable support and allowing for rapid setup. The video head delivers fluid pan and tilt movement with fixed pan tension and drag adjustment for tilt.

Precautions

- Please read and follow these instructions, and keep this manual in a safe place.
- Never set up or pull down the tripod while a camera is mounted.
- Do not move the tripod or adjust the legs while a camera is mounted.
- Do not exceed the maximum weight capacity of the tripod.
- Never leave a camera unattended on the tripod.
- The camera should be securely fastened to the quick-release mounting plate before mounting onto the tripod.
- Never mount a camera on the tripod until all tripod legs are locked and stabilized.
- Do not stand on, rest on, or hang anything from the mid-level spreader.
- Do not lift or move the tripod by the head.
- Keep hands clear of the insidse of the legs to avoid trapping fingers.
- Safe operation of the tripod is the user's responsibility.
- All images are for illustrative purposes only.

Specifications

General

Load Capacity: 17 lb. (7.7 kg)

Maximum Working Height: 66.5 in. (168.9 cm)

Minimum Working Height: 29.9 in. (75.9 cm)

Folded Length: 33.2 in. (84.3 cm)

Weight: 10.2 lb. (4.6 kg)

Materials: Carbon fiber, anodized aluminum alloy

Bubble Level: Yes

Head

Counterbalance System: Spring loaded

Quick-Release Plate: 4.7 × 2 × 0.4 in. (12 × 5 × 1 cm)

Quick-Release Safety: Yes

Camera Mounting Screw: 1/4-20, 3/8-16

Built-In Balance Plate: Yes

Tilt Drag: Adjustable, fluid

Tilt Range: +70°/-80°

Tilt Lock: Yes

Pan Drag: Fixed, fluid

Pan Range: 360°

Pan Lock: Yes

Pan-Handle Rosettes: 2 (left and right)

Leveling Bubble / Illuminated: Yes, unilluminated

Head Mount Type: 75 mm half ball

Legs

Material: Carbon fiber

Head Attachment Fitting: 75 mm bowl

Leg Stages / Sections: Two stages

Leg Lock Type: Single flip lock

Independent Leg Spread: Yes

Spreader: Mid level (adjustable)

Spiked / Retractable Feet: Nonretractable spikes with removable nonslip rubber feet

Head (5000H)

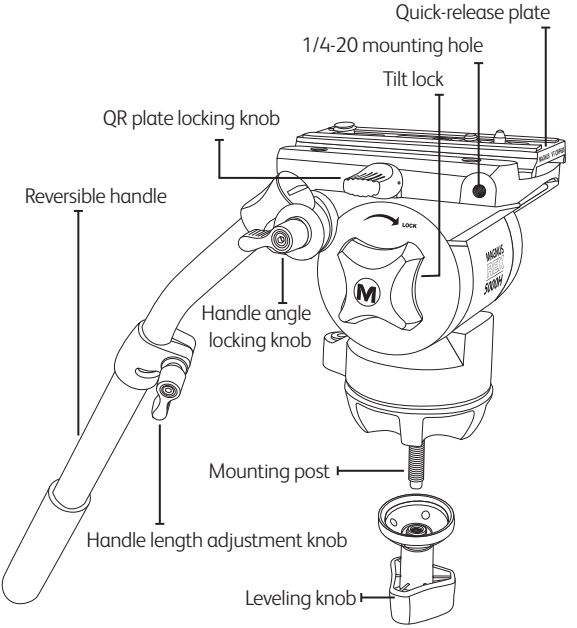
Quick-release plate
1/4-20 mounting hole
Tilt lock
QR plate locking knob
Reversible handle
LOCK
Handle angle
locking knob
Mounting post
Handle length adjustment knob
Leveling knob

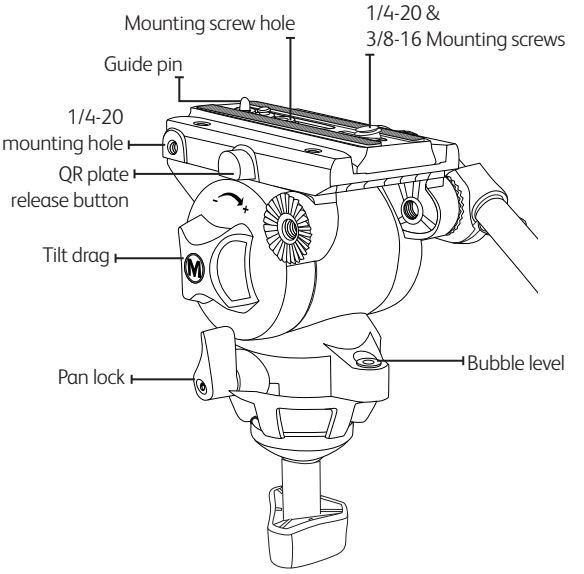
Mounting screw hole
1/4-20 &
3/8-16 Mounting screws
Guide pin
1/4-20
mounting hole
QR plate
release button
Tilt drag
Pan lock
Bubble level

Tripod (TL750C)

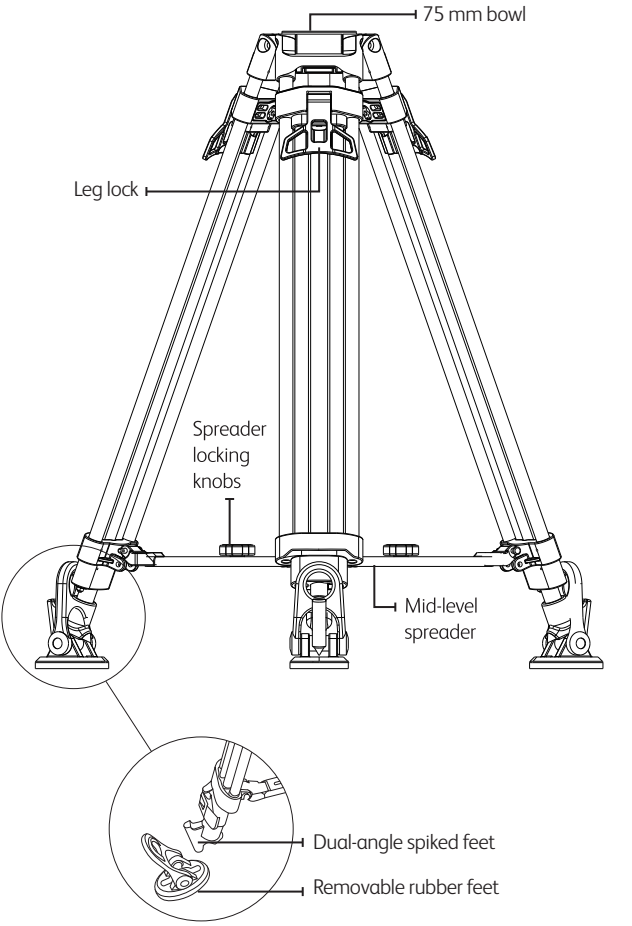

Also Includes

- Shoulder strap
- Padded carry case

Using the Single-lever Leg Lock

Flip the single-lever leg lock and extend the two sections at once. Lock to secure the legs' height. Push the mid-level spreader down to fully extend the legs.

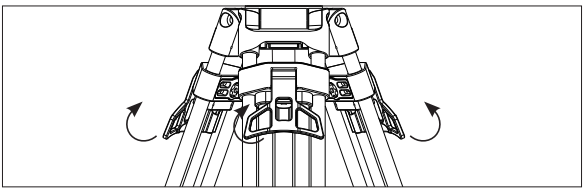

Handle

Use the handle locking knob ❶ to rotate the handle.

Use the length adjustment knob ❷ to lengthen or shorten the handle.

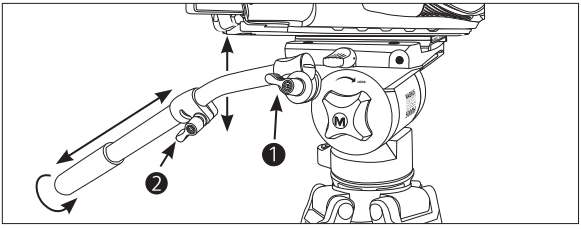

Reversing the Handle

1. Unscrew the handle-angle lock and remove the handle from the head.
2. Use a flat screwdriver or a coin to unscrew the endcap.
3. Reverse the orientation for the rosette and screw.

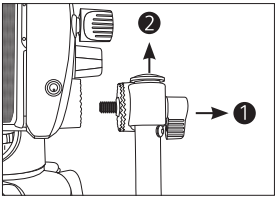

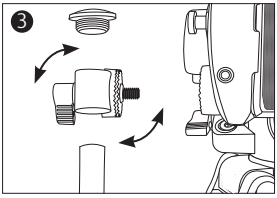

4. Replace the endcap, and use the angle lock to screw the handle into the socket. When it's properly attached, the screw and rosette should sit below the handle.

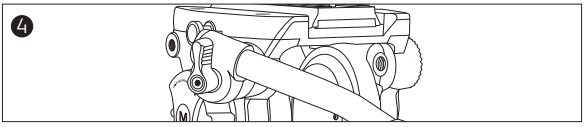

Tilt Control

The VT-5000-CM has a fixed spring-loaded counterbalance which returns the head to a vertical position when the handle is released. The greater the tilt drag, the slower the head will return.

Use the tilt lock to tighten or loosen the tilting action.

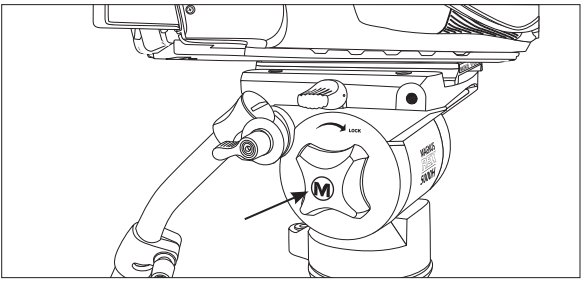

Use the tilt drag control to increase or decrease the tension.

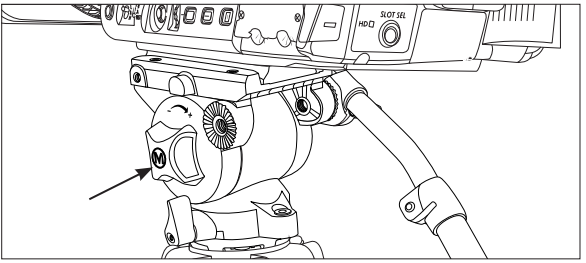

Pan Control

The VT-5000-CM has fixed panning so the head will always have the same amount of tension, allowing for a consistent, smooth panning motion.

Turn the pan lock a quarter-turn clockwise to lock the panning motion.

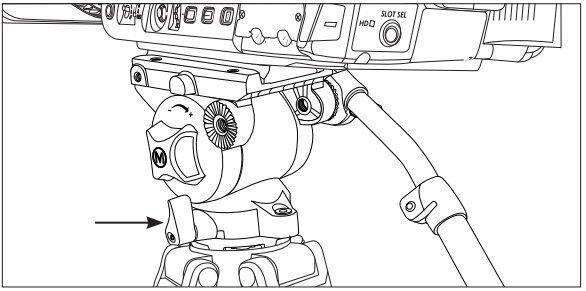

One-Year Limited Warranty

This Magnus product is warranted to the original purchaser to be free from defects in materials and workmanship under normal consumer use for a period of one (1) year from the original purchase date or thirty (30) days after replacement, whichever occurs later. The warranty provider's responsibility with respect to this limited warranty shall be limited solely to repair or replacement, at the provider's discretion, of any product that fails during normal use of this product in its intended manner and in its intended environment. The inoperability of the product or part(s) shall be determined by the warranty provider. If the product has been discontinued, the warranty provider reserves the right to replace it with a model of equivalent quality and function.

This warranty does not cover damage or defect caused by misuse, neglect, accident, alteration, abuse, improper installation or maintenance. EXCEPT AS PROVIDED HEREIN, THE WARRANTY PROVIDER MAKES NEITHER ANY EXPRESS WARRANTIES NOR ANY IMPLIED WARRANTIES, INCLUDING BUT NOT LIMITED TO ANY IMPLIED WARRANTY OF MERCHANTABILITY OR FITNESS FOR A PARTICULAR PURPOSE. This warranty provides you with specific legal rights, and you may also have additional rights that vary from state to state.

To obtain warranty coverage, contact the Magnus Customer Service Department to obtain a return merchandise authorization ("RMA") number, and return the defective product to Magnus along with the RMA number and proof of purchase. Shipment of the defective product is at the purchaser's own risk and expense.

For more information or to arrange service, visit www.magnustripods.com or call Customer Service at 212-594-2353.

MAGNUS®
A Gradus Group Brand

Product warranty provided by the Gradus Group.
www.gradusgroup.com

Magnus is a registered trademark of the Gradus Group.
© 2025 Gradus Group LLC. All rights reserved.

GG3