KanexPro™

HDMI 8K Audio to Amplifier w/ eARC User Manual

SKU: AUD-AMP-8K

Thank you for purchasing this product

For optimum performance and safety, please read these instructions carefully before connecting, operating or adjusting this product. Please keep this manual for future reference.

Surge protection device recommended

This product contains sensitive electrical components that may be damaged by electrical spikes, surges, electric shock, lighting strikes, etc. Use of surge protection systems is highly recommended in order to protect and extend the life of your equipment.

Table of Contents

1. Introduction..... 1

2. Features..... 1

3. Package Contents..... 2

4. Specifications..... 2

5. Operation Controls and Functions. 4

6. Application Example..... 6

1. Introduction

The KanexPro HDMI 8K Audio to Amplifier w/ eARC Adapter is designed for de-embedding audio signals from an HDMI source or TV with ARC/ eARC to output HDMI audio to AV Receiver. It supports data rates up to 48Gbps complying with HDMI 2.1 and HDCP 2.3 requirements. It is compatible with UHDTV 8K@60Hz. It includes several features for ease of integration, such as EDID management and cable equalization. It provides an easy solution for HDMI installations to send audio signals to an old audio amplifier. CEC control from TV to the source and amplifier is also supported.

2. Features

- ☆ HDCP 2.3 compliant
- ☆ Support 48Gbps FRL and 18Gbps TMDS video bandwidth, as specified in HDMI 2.1
- ☆ Support video resolution up to 8K@60Hz 4:2:0 12bit, 4K@120Hz 4:4:4 12bit
- ☆ Support VRR, ALLM, QMS, QFT, SBTM, as specified in HDMI 2.1
- ☆ HDR, HDR 10, HDR 10+, Dolby Vision, HLG pass-through
- ☆ LPCM 7.1CH, Dolby TrueHD, Atmos and DTS-HD Master, DTS:X Audio pass-through
- ☆ HDMI input audio or TV ARC/eARC audio de-embedded to HDMI audio output
- ☆ Support CEC control from TV to the source and amplifier
- ☆ Support CEC volume control from TV to the amplifier sound system
- ☆ Advanced EDID management

3. Package Contents

① 1 × 48Gbps HDMI eARC Audio to Amplifier Adapter

② 1 × 5V/2A Multinational Power Supply

③ 1 × User Manual

4. Specifications

Technical	
HDMI Compliance	HDMI 2.1
HDCP Compliance	HDCP 2.3
Video Bandwidth	48Gbps FRL and 18Gbps TMDS
Video Resolution	Up to 8K@60Hz 4:2:0 12bit, 4K@120Hz 4:4:4 12bit
Audio Latency	No Latency
Video Latency	No Latency
Color Depth	8/10/12bit
Color Space	RGB_4:4:4, YCbCr_4:4:4, YCbCr_4:2:2, YCbCr_4:2:0
Audio Formats	**HDMI IN/OUT:** LPCM, Dolby Digital/Plus/EX, Dolby True HD, Dolby Atmos, DTS, DSD,DTS-EX, DTS-96/24, DTS High Res, DTS-HD Master Audio, DTS:X **HDMI AUDIO OUT:** LPCM, Dolby Digital/Plus/EX, Dolby True HD, Dolby Atmos, DTS, DSD, DTS-EX, DTS-96/24, DTS High Res, DTS-HD Master Audio, DTS:X
HDR	HDR, HDR10, HDR10+, Dolby Vision, HLG
ESD Protection	IEC 61000-4-2: ±8kV (Air-gap discharge) & ±4kV (Contact discharge)

Connection				
Input	1 × Source IN [HDMI Type A, 19-pin female]			
Output	1 × TV(eARC) OUT [HDMI Type A, 19-pin female] 1 × Amp AUDIO OUT [HDMI Type A, 19-pin female]			
Control	1 × SERVICE [USB Type C, Update port]			
Mechanical				
Housing	Metal Enclosure			
Color	Black			
Dimensions	95mm [W] × 68mm [D] × 18mm [H]			
Weight	178g			
Power Supply	Input: AC 100-240V 50/60Hz, Output: DC 5V/2A (US/EU standards, CE/FCC/UL certified)			
Power Consumption	4.5W (Max)			
Operation Temperature	0°C ~ 40°C / 32°F ~ 104°F			
Storage Temperature	-20°C ~ 60°C / -4°F ~ 140°F			
Relative Humidity	20~90% RH (non-condensing)			
Recommended HDMI Cable				
Video Resolution	8K60	4K60	4K30	1080P
HDMI Cable Length (HDMI IN / OUT)	2m/6.6ft ~ 3m/10ft (Ultra HDMI 2.1)	5m/16ft	10m/33ft	15m/49ft
The use of “Premium High Speed HDMI” cable is highly recommended.				

5. Operation Controls and Functions

Front Panel

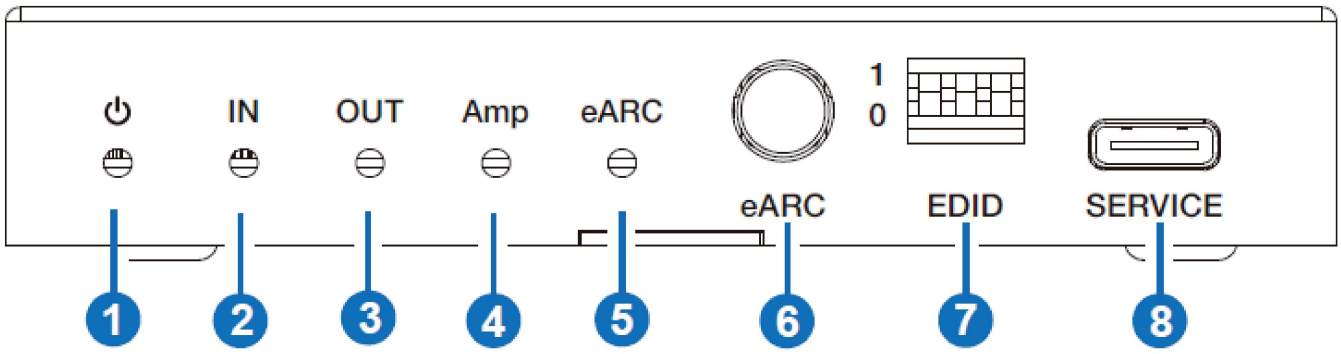

No.	Name	Function Description
1	Power LED	When the device is powered on, the red LED will be on.
2	IN LED	When the input signal is detected, the green LED will be on.
3	OUT LED	When the OUT port connects to a TV, the green LED will be on.
4	Amp LED	When the AUDIO OUT port connects to an amplifier, the green LED will be on.
5	eARC LED	▪ **On:** The ARC/eARC function is turned on. CEC communication and ARC/eARC is working properly. ▪ **Flashing:** The ARC/eARC function is turned on. CEC communication and ARC/eARC is not working properly. ▪ **Off:** The ARC/eARC function is turned off.
6	eARC button	Press this button to enable or disable the eARC function.
7	EDID DIP switch	Use the DIP switch to set EDID. [DIP]=111: Copy OUT port sink video and audio EDID [DIP]=110: Copy AUDIO OUT port sink video and audio EDID [DIP]=101: FRL12G_8K_HDR, 2.0CH [DIP]=100: FRL12G_8K_HDR, 5.1CH [DIP]=011: FRL12G_8K_HDR, 7.1CH [DIP]=010: FRL10G_8K_HDR, 2.0CH [DIP]=001: FRL10G_8K_HDR, 5.1CH [DIP]=000: FRL10G_8K_HDR, 7.1CH
8	SERVICE	Firmware update and debug port.

Rear Panel

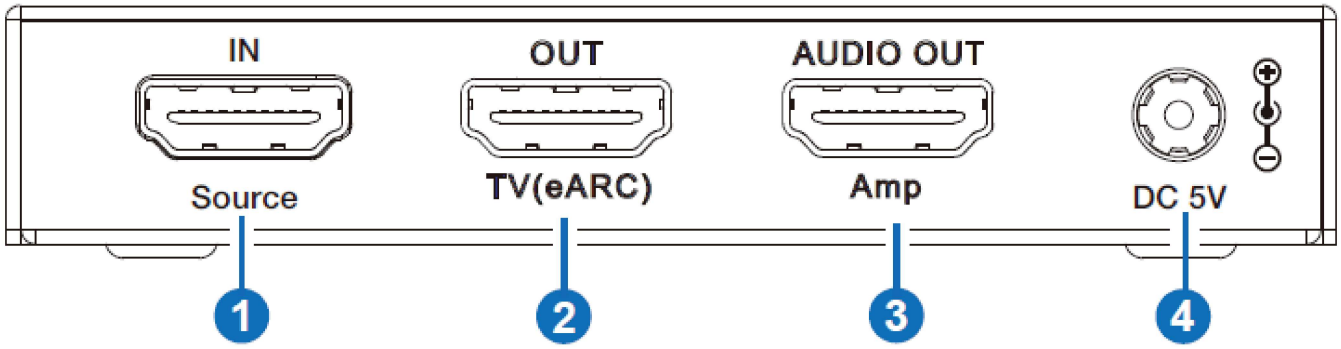

No.	Name	Function Description
1	Source IN port	HDMI signal input port, connected to HDMI source device such as DVD, PS5 or 8K computer host with an HDMI cable.
2	TV(eARC) OUT port	HDMI signal output port, connected to TV (ARC/eARC) with an HDMI cable. It can be used as an ARC/eARC audio channel when the ARC function is enabled.
3	Amp AUDIO OUT	HDMI audio output port, connected to an amplifier with an HDMI cable.
4	DC 5V	DC 5V/2A power input port.

6. Application Example

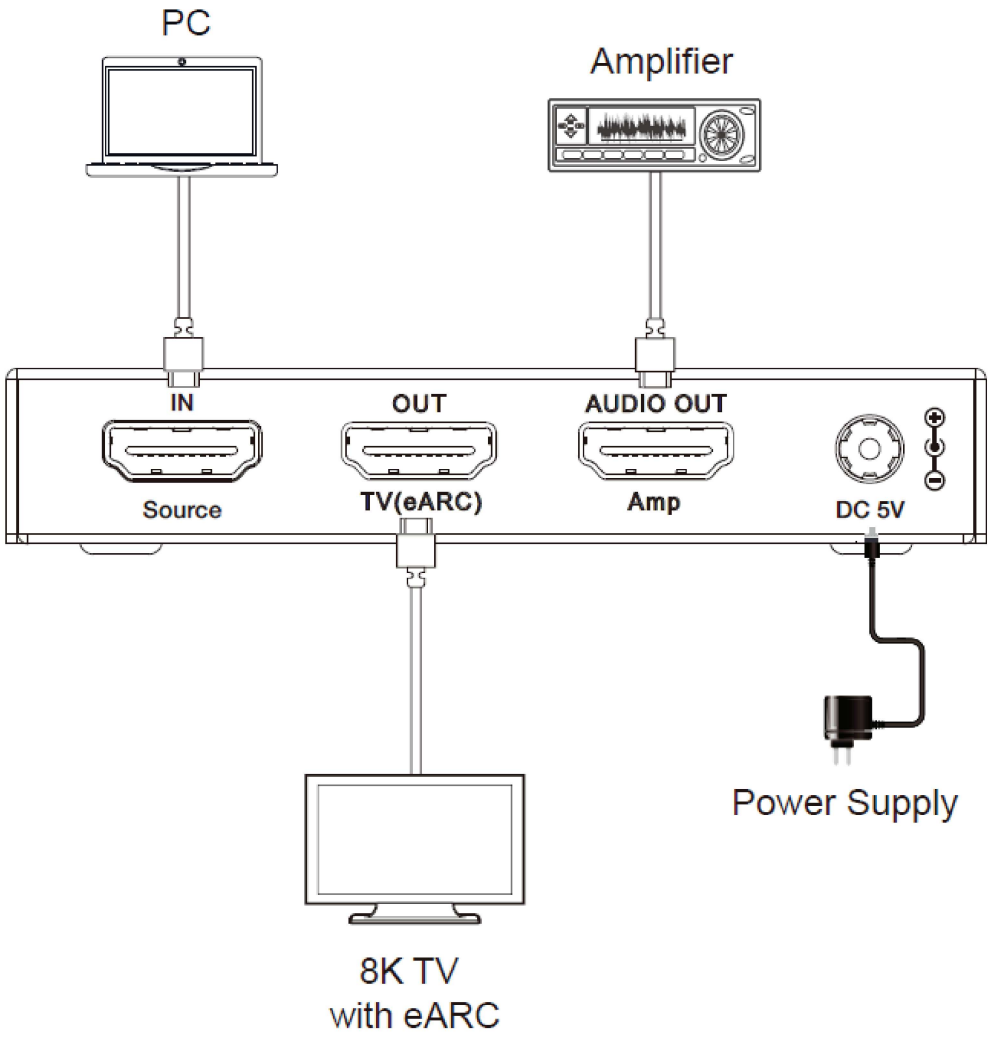

Note: When eARC function is turned on, the audio signal of Amplifier is the audio returned from 8K TV. When eARC function is turned off, the audio signal of Amplifier is from the HDMI input source.

HIGH-DEFINITION MULTIMEDIA INTERFACE

The terms HDMI and HDMI High-Definition Multimedia interface, and the HDMI Logo are trademarks or registered trademarks of HDMI Licensing LLC in the United States and other countries.