KanexPro™

HDMI KVM Switcher 2 Port 8K@60Hz

User Manual

SKU: KVM-2X1HDMI8K

Thank you for purchasing this product

For optimum performance and safety, please read these instructions carefully before connecting, operating or adjusting this product. Please keep this manual for future reference.

Surge protection device recommended

This product contains sensitive electrical components that may be damaged by electrical spikes, surges, electric shock, lighting strikes, etc. Use of surge protection systems is highly recommended in order to protect and extend the life of your equipment.

Table of Contents

1. Introduction..... 1
2. Features..... 1
3. Package Contents..... 2
4. Specifications..... 2
5. Operation Controls and Functions..... 4
   5.1 Front Panel..... 4
   5.2 Rear Panel..... 5
   5.3 IR Pin Definition.....6
6. IR Remote..... 6
7. Hotkey Switch Function..... 7
8. Keyboard & Mouse Hotkey Function..... 7
9. ASCII Commands..... 8
10. Application Example.....10

1. Introduction

The KVM-2X1HDMI8K is a 2x1 KVM Switcher with hotkey switching. It supports resolutions up to 8K@60Hz 4:2:0 10bit and can also transmit USB 3.0 signal up to 5Gbps for KVM function.
The switcher features virtual interaction function, so that it can automatically wake up the connected PC that is in standby mode, which can reduce the switching time. It also supports direct switching through buttons on the front panel, IR remote, and hotkey through keyboard/mouse connected to the special USB port. It provides a wide compatibility choice for different operating systems, such as Windows, Mac OS and Linux, no driver
required and simple plug and play.

2. Features

- ☆ HDCP 2.3 compliant
- ☆ Support Ultra-wide Screen, resolution up to 8K@60Hz, 4K@120Hz/144Hz, 1080P@240Hz
- ☆ Support VRR, ALLM, QMS, QFT, SBTM as specified in HDMI 2.1
- ☆ HDR, HDR10, HDR10+, Dolby Vision, HLG pass-through
- ☆ Using only 1 set of keyboard, mouse and monitor to control 2 computers
- ☆ Support video fast switching, and keyboard/mouse seamless switching
- ☆ Each input port has an EDID emulator to provide the correct information for the PC
- ☆ Support hot plug, disconnect or connect devices to the KVM at any time
- ☆ Switching via front panel buttons, keyboard/mouse hotkeys, IR remote control, and RS-232 commands
- ☆ Support auto switching
- ☆ Advanced hardware/software design and production ensure zero latency
- ☆ The integrated USB 3.0 ports allow you to share USB peripherals like printer, scanner, webcam and hard disk between computers with data transfer rate up to 5Gbp/s
- ☆ Compact design for easy and flexible installation

3. Package Contents

① 1 x 8K60 2x1 KVM Switcher
② 1 x IR Remote
③ 1 x 3pin-3.81mm Phoenix Connector (male)
④ 1 x Fixed Frequency 38KHz IR Receiver Cable (1.5 meters)
⑤ 2 x USB Cable (USB 3.0, AM to BM, 1.8 meters)
⑥ 2 x HDMI Cable (male to male, 1.5 meters)
⑦ 2 x Mounting Ears
⑧ 4 x Machine Screws (KM3*4)
⑨ 1 x 12V/1A Multinational Locking Power Supply
⑩ 1 x User Manual

4. Specifications

Technical	
HDMI Compliance	HDMI 2.1
HDCP Compliance	HDCP 2.3
Video Bandwidth	40Gbps
Audio Latency	No Latency
Video Latency	No Latency
Video Resolution	Up to 8K@60Hz, 4K@120Hz/144Hz, 1080P@240Hz
IR Level	5Vp-p
IR Frequency	Fixed frequency 38KHz
Color Space	RGB, YCbCr 4:4:4, YCbCr 4:2:2, YCbCr 4:2:0
Color Depth	8/10/12bit
HDR	HDR, HDR10, HDR10+, Dolby Vision, HLG
CEC	Support
Audio Formats	**HDMI IN/OUT:** LPCM, Dolby Digital/Plus/EX, Dolby True HD, Dolby Atmos, DTS, DTS-EX, DTS-96/24, DTS High Res, DTS-HD Master Audio, DTS:X, DSD **L/R OUT:** PCM 2.0CH

ESD Protection	IEC 61000-4-2: ±8kV (Air-gap discharge), ±4kV (Contact discharge)		
Connection			
Input ports	2 x HDMI input [Type A, 19-pin female]		
Output ports	1 x HDMI output [Type A, 19-pin female] 1 x L/R audio output [3.5mm Stereo Mini-jack]		
Control ports	1 x RS-232 [3pin-3.81mm phoenix connector] 1 x IR EXT [3.5mm Stereo Mini-jack] 2 x USB HOST [USB Type B] 4 x USB DEVICES [USB Type A]		
Mechanical			
Housing	Metal Enclosure		
Color	Black		
Dimensions	175mm [W] x 100mm [D] x 30mm [H]		
Weight	506g		
Power Supply	Input: AC 100 - 240V 50/60Hz Output: DC 12V/1A (US/EU standard, CE/FCC/UL certified)		
Power Consumption	Typical value: 7W Standby mode: 0.7W		
Operating Temperature	32 - 104°F / 0 - 40°C		
Storage Temperature	-4 - 140°F / -20 - 60°C		
Relative Humidity	20 - 90% RH (no-condensing)		
Recommended HDMI Cable			
Video Resolution	8K60/8K30/4K120	4K60	1080P
HDMI Cable Type	Ultra HDMI 2.1 cable	HDMI cable	HDMI cable
HDMI Cable Length (HDMI IN / OUT)	2m/6.6ft	5m/16ft	10m/33ft
The use of “Premium High Speed HDMI” cable is highly recommended.			

5. Operation Controls and Functions

5.1 Front Panel

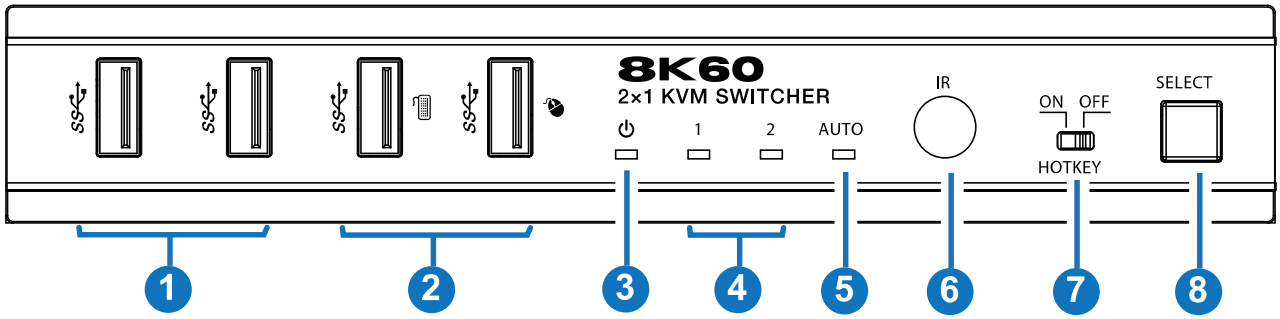

No.	Name	Function Description
1	USB 3.0 ports	USB 3.2 Gen 1 device ports, connected to USB 3.0 flash disk, camera, printer etc.
2	USB 3.0 ports (with hotkey mode)	▪ When Hotkey switch to OFF mode, these two ports support USB 3.2 Gen 1 device. ▪ When Hotkey switch to ON mode, these two ports support USB 1.1 mouse and keyboard only.
3	Power LED	The Power LED will light in green when the product is working, and red when the product is on standby.
4	Input channel LED 1/2	When the HDMI input port 1/2 is selected as the signal input channel, the corresponding LED 1/2 will light in green.
5	AUTO LED	When the auto switching function is enabled, the AUTO LED will light in green, otherwise it will light off.
6	IR Window	IR signal receiving window.
7	HOTKEY switch	Use the switch to enable/disable the hotkey switching mode. ▪ Switch to “ON”: The connected keyboard and mouse support hotkey switching mode. ▪ Switch to “OFF”: The connected keyboard and mouse don’t support hotkey switching mode.
8	SELECT button	Press the button to switch the input channel.

5.2 Rear Panel

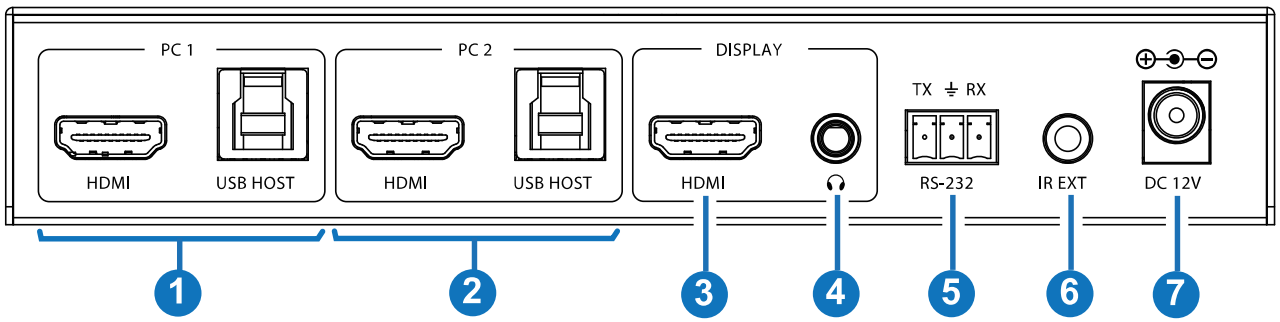

No.	Name	Function Description
1	PC 1 ports	**HDMI:** HDMI signal input port, connected to HDMI source device such as PC with HDMI cable. **USB HOST:** USB Host port, connected to PC 1. It can be used for firmware upgrade.
2	PC 2 ports	**HDMI:** HDMI signal input port, connected to HDMI source device such as PC with HDMI cable. **USB HOST:** USB Host port, connected to PC 2.
3	DISPLAY HDMI port	HDMI signal output port, connected to HDMI display device such as TV or Monitor with HDMI cable.
4	L/R audio port	3.5mm analog audio output port.
5	RS-232 port	3-pin phoenix connector, connected to a PC or control system for serial port upgrade.
6	IR EXT port	IR signal receiving port, connected with 38KHz IR Receiver cable. If the IR signal receiving window of the unit is blocked or the unit is installed in a closed area out of infrared line of sight, the IR receiver cable can be inserted to the “IR EXT” port to receive the IR remote signal.
7	DC 12V	DC 12V/1A power input port.

5.3 IR Pin Definition

IR Receiver pin's definition is as below:

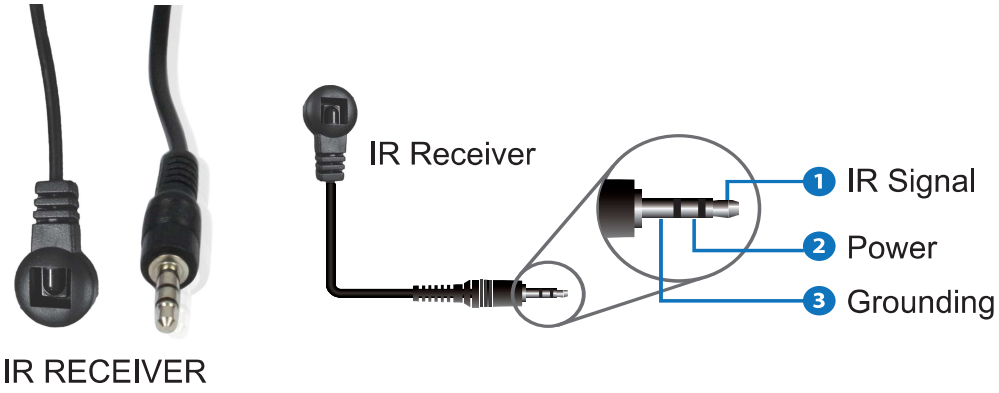

6. IR Remote

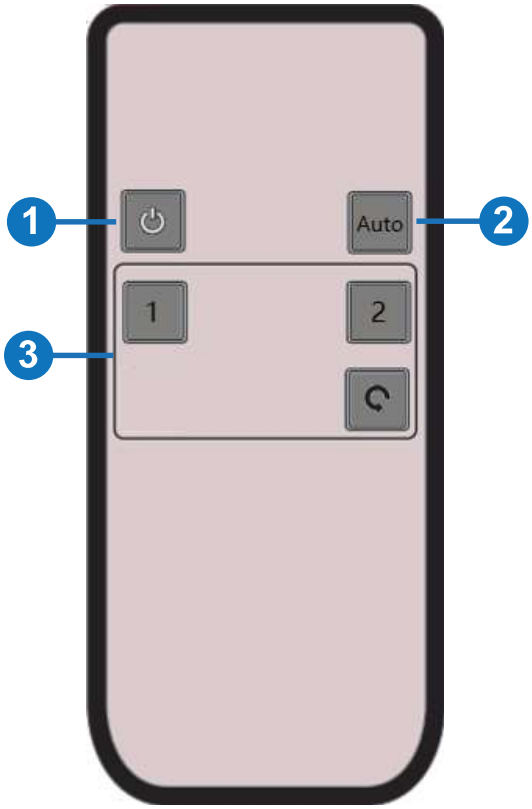

① **Power on or Standby:** Press this button to power on the switcher or set it to standby mode.
② **Auto:** Press this button to enable/disable the auto switching function.
③ **1/2:** Press 1/2 button to select the HDMI input port 1/2 as the input channel, and the corresponding channel LED on the front panel will light in green.
: Press this button to cyclically switch the input channel.

7. Hotkey Switch Function

The Hotkey switch on the front panel allows you to enable/disable the hotkey switch function.
(1) When Hotkey switch to OFF mode, the hotkey switch function is disabled, and two USB 3.0 ports (with hotkey mode) support USB 3.2 Gen 1 device.
(2) When Hotkey switch to ON mode, the hotkey switch function is enabled, and two USB 3.0 ports (with hotkey mode) only support USB 1.1 mouse and keyboard, which can be used for hotkey switching.

8. Keyboard & Mouse Hotkey Function

When the hotkey mode is enabled, you can use keyboard and mouse hot keys to operate and control the product.
(1) Keyboard hotkeys are as following:

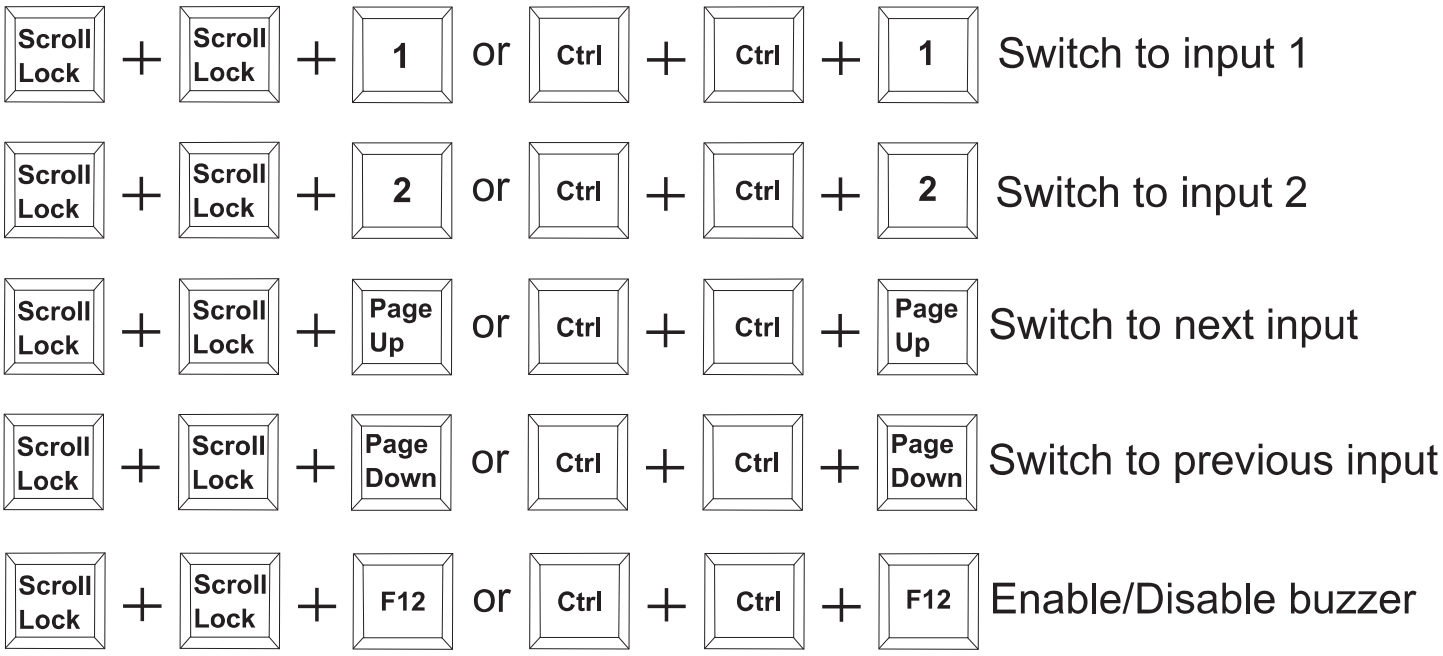

(2) Mouse hotkeys are as following:
Double-Click Middle-Right (Double-click the mouse scroll wheel, and then click the right button): Switch to next input
Double-Click Middle-Left (Double-click the mouse scroll wheel, and then click the left button): Switch to previous input

9. ASCII Commands

The product also supports ASCII commands control. Connect the RS-232 port of the product to a PC with a 3-pin phoenix connector cable and an RS-232 to USB cable. The connection method is as follows.

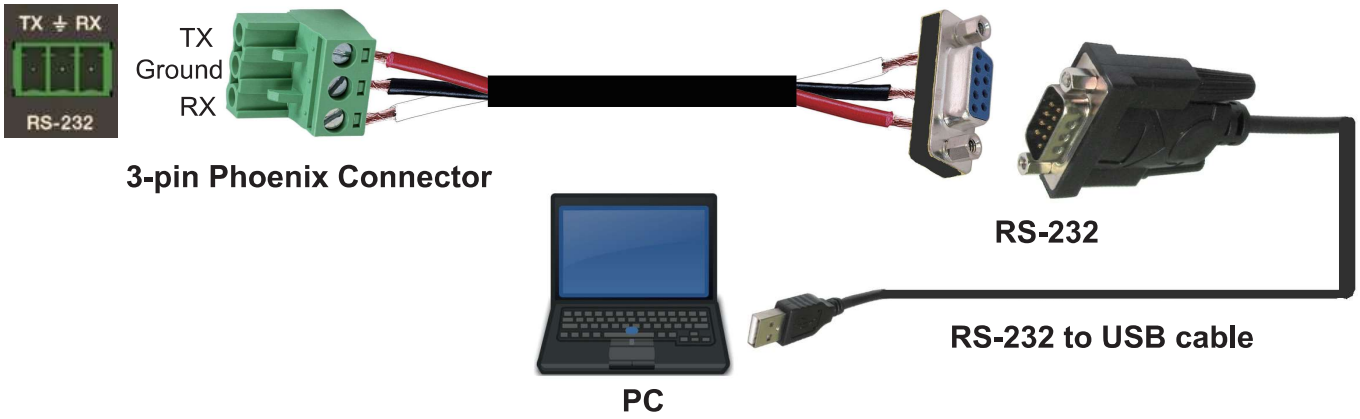

Then, open a Serial Command tool on PC to send ASCII commands to control the product.
The ASCII commands list about the product is shown as below.

ASCII Commands				
Serial port protocol. Baud rate: 115200 (default), Data bits: 8, Stop bits:1, Check bit: 0				
x - Parameter 1 z - Parameter 2 ! - Delimiter				
Command Code	**Function Description**	**Example**	**Feedback**	**Default Setting**
help!	List all commands	help!		
status!	Get device current status	status!		
r type!	Get device model	r type!	2x1 kvm hdmi2.1 switcher	
r fw version!	Get firmware version	r fw version!	mcu fw version: vx.xx.xx kvm fw version: vx.xx.xx	
power z!	Power on/off the device (z=0~1) 0. power off 1. power on	power 1!	power on	
r power!	Get current power state	r power!	power on	
reboot!	Reboot the device	reboot!	reboot…	
reset!	Reset to factory defaults	reset!	reset to factory defaults	

Command Code	Function Description	Example	Feedback	Default Setting
s output 1 stream x!	Set output 1 stream enable/ disable (x=0~1) 0. disable output stream 1. enable output stream	s output 1 stream 1!	output 1 stream: enable	output 1 stream: enable
r output 1 stream!	Get output 1 stream status	r output 1 stream!	output 1 stream: enable	
s auto switch x!	Enable/disable auto switch feature (x=0~1) 0. disable auto switch 1. enable auto switch	s auto switch 1!	auto switch: enable	auto switch: enable
r auto switch!	Get auto switch feature	r auto switch!	auto switch: enable	
s output 1 in source x!	Route input x source to output 1 (x=1~2) 1.input1 2.input2	s output 1 in source 1!	output1->input1	
r output 1 in source x!	Get output 1 selected input source	r output 1 in source!	output1->input1	
s beep z!	Enable/disable buzzer function (z=0~1) 0. beep off 1. beep on	s beep 1!	beep on	beep off
r beep!	Get buzzer state	r beep!	beep on	

10. Application Example

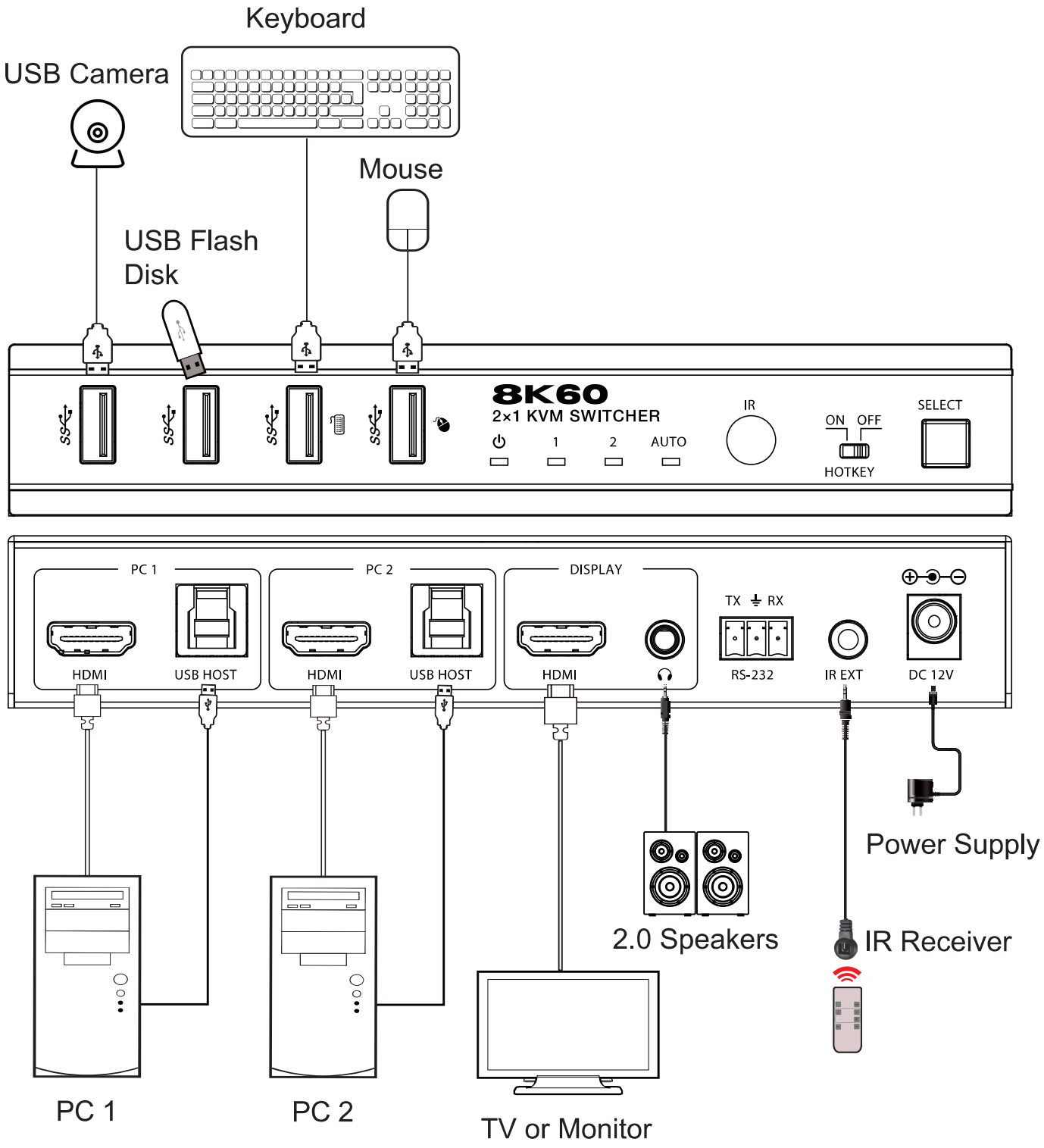

HIGH-DEFINITION MULTIMEDIA INTERFACE

The terms HDMI and HDMI High-Definition Multimedia interface, and the HDMI Logo are trademarks or registered trademarks of HDMI Licensing LLC in the United States and other countries.