MOUNT-IT!

ASSEMBLY INSTRUCTIONS

Mount-It!
Wire Shelving Cart / Printer Stand
(MI-7856)

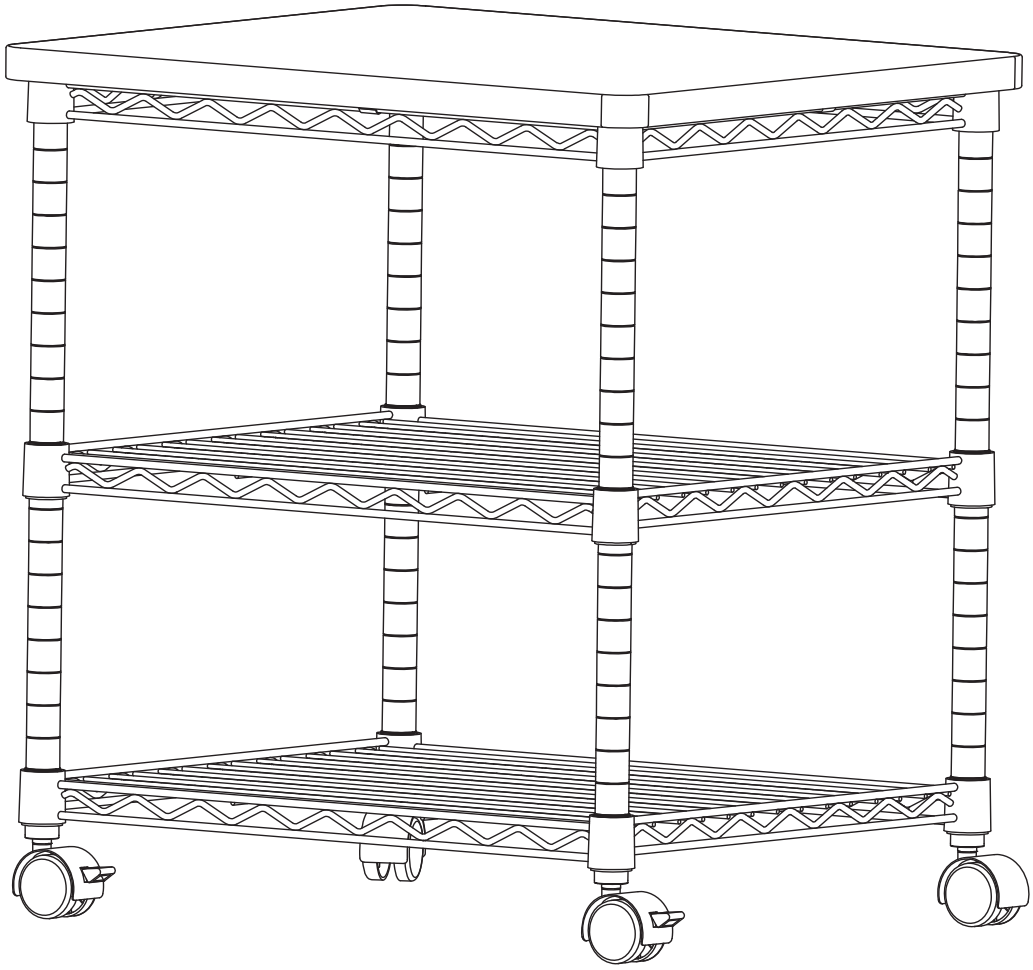

Visit **mount-it.com** for product registration and warranty information.

• • •

Contact us at **support@mount-it.com** for support and questions.

PARTS LIST		
CODE	DESCRIPTION	QTY
Ⓐ	Top with Frame	1
Ⓑ	Lower Shelf	2
Ⓒ	Post	4

HARDWARE PACK 1

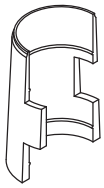

D Half-Sleeve Qty. 24

HARDWARE PACK 2



E Non-Locking Caster Qty. 2



F Locking Caster Qty. 2



G Caster Wrench (not shown) Qty. 1

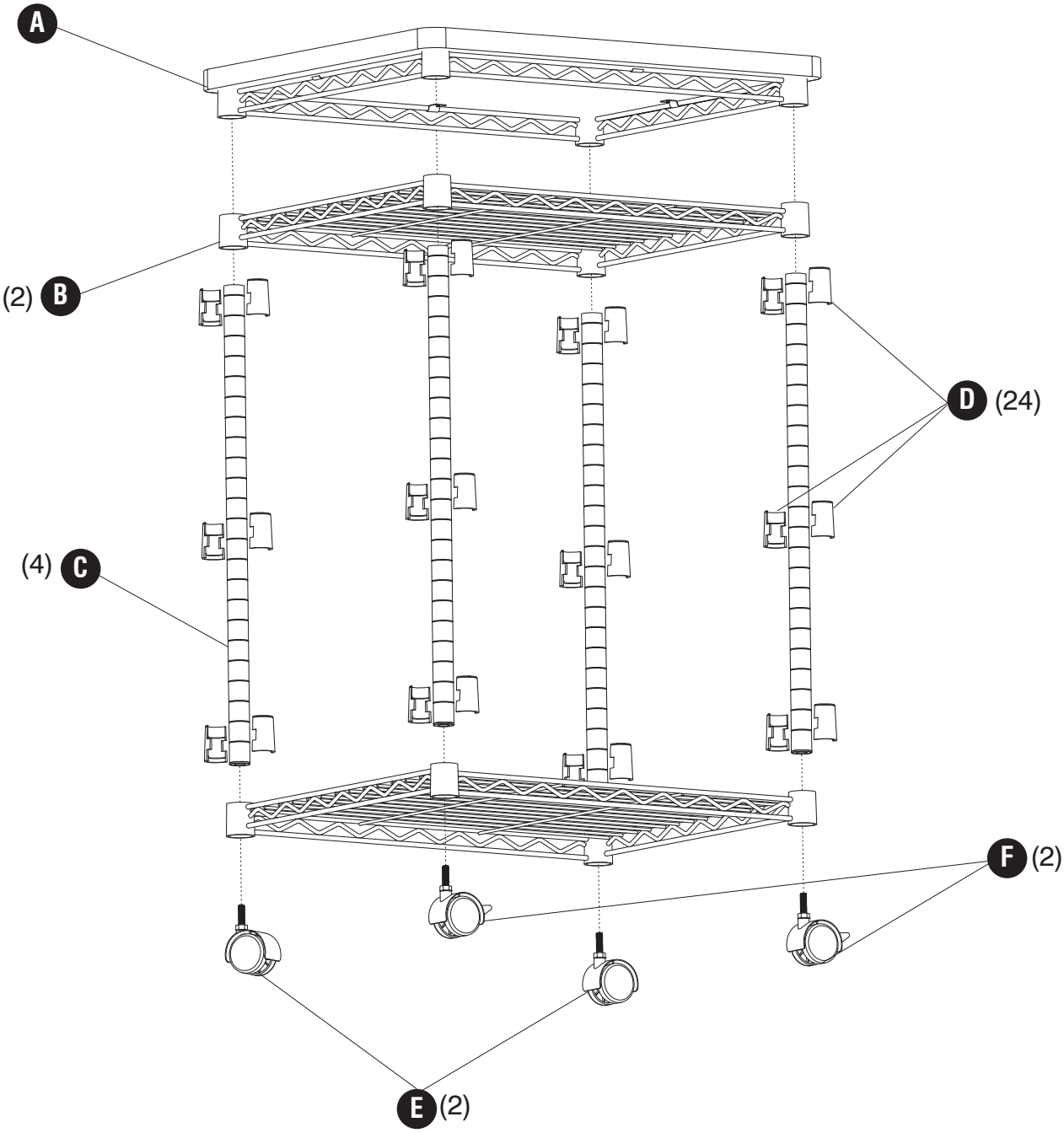

1 **Attach the casters to the bottom of the posts.**

Place the Locking Casters on the accessible side of the cart.

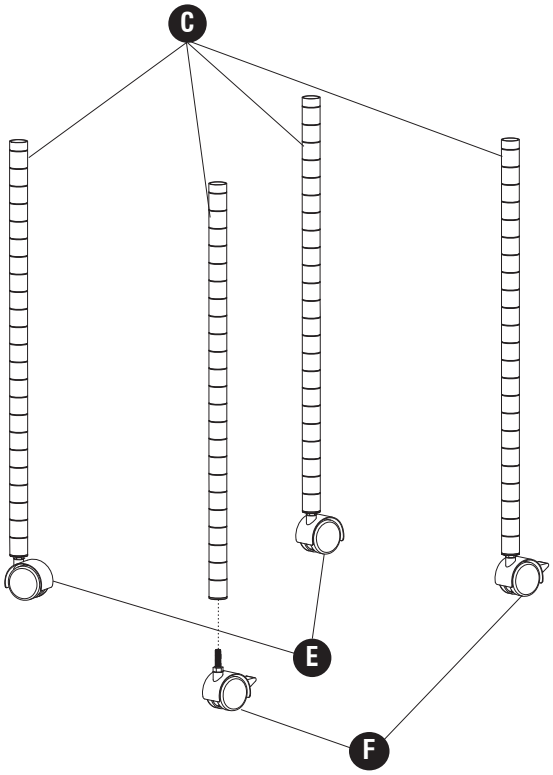

2 **(x4)** **D** **(2 per assembled post)**

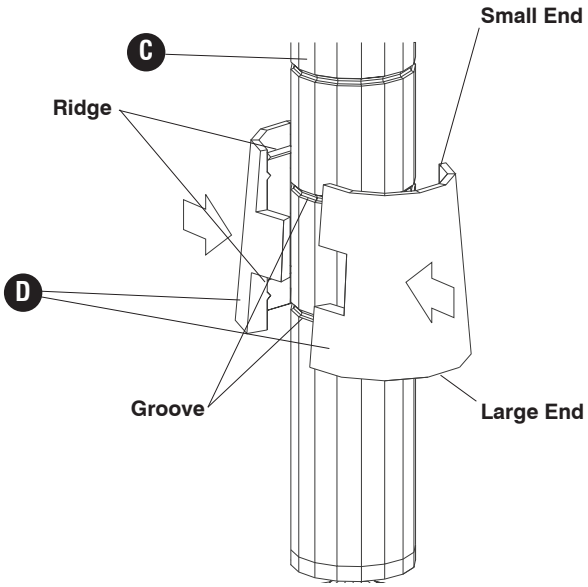

Connect the half-sleeves at the desired height for the lower shelf. Use lowest grooves for maximum capacity.

3 **Insert the posts into the corners of the lower shelf.**

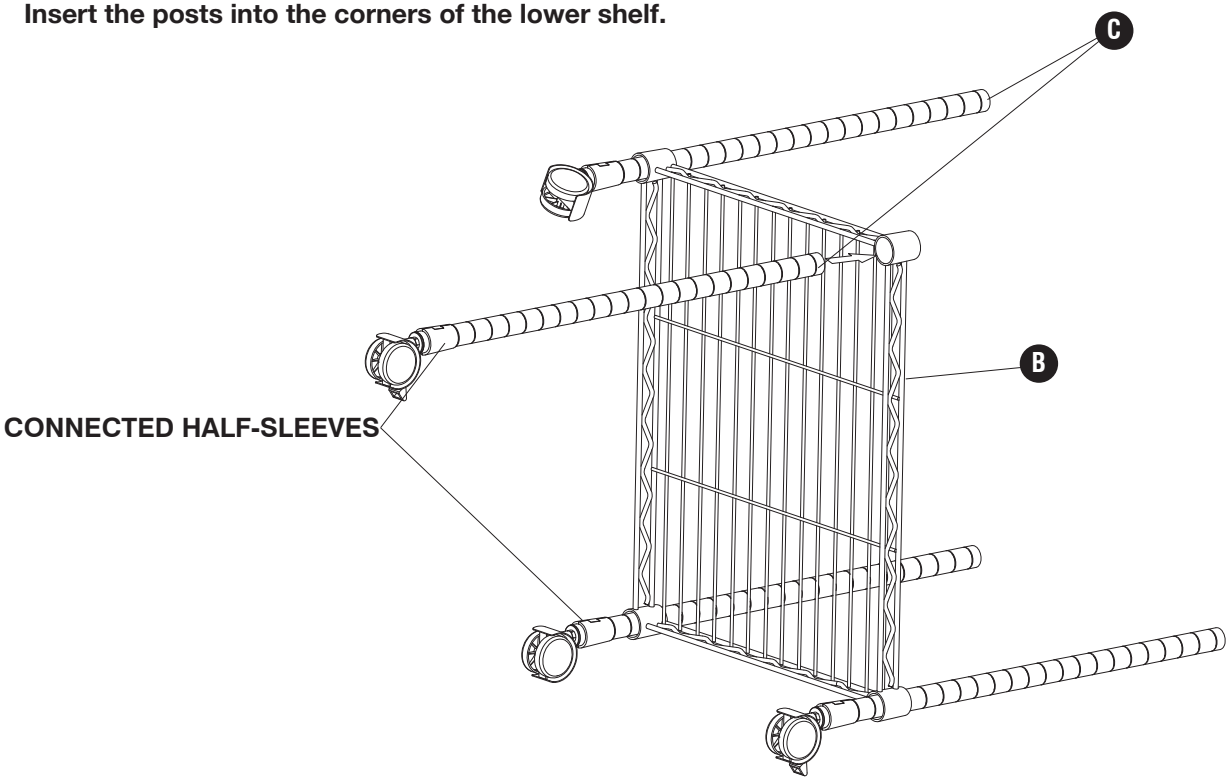

4

Press the lower shelf firmly to position it in place.

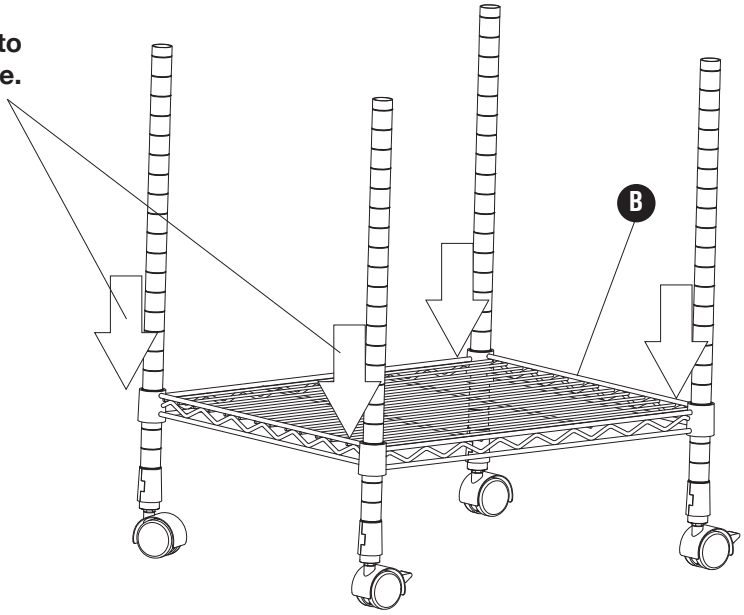

5

D  **(2 per assembled post)**

Press the middle shelf firmly to position it in place.

Connect the half-sleeves at the desired height for the middle shelf.

CONNECTED HALF-SLEEVES

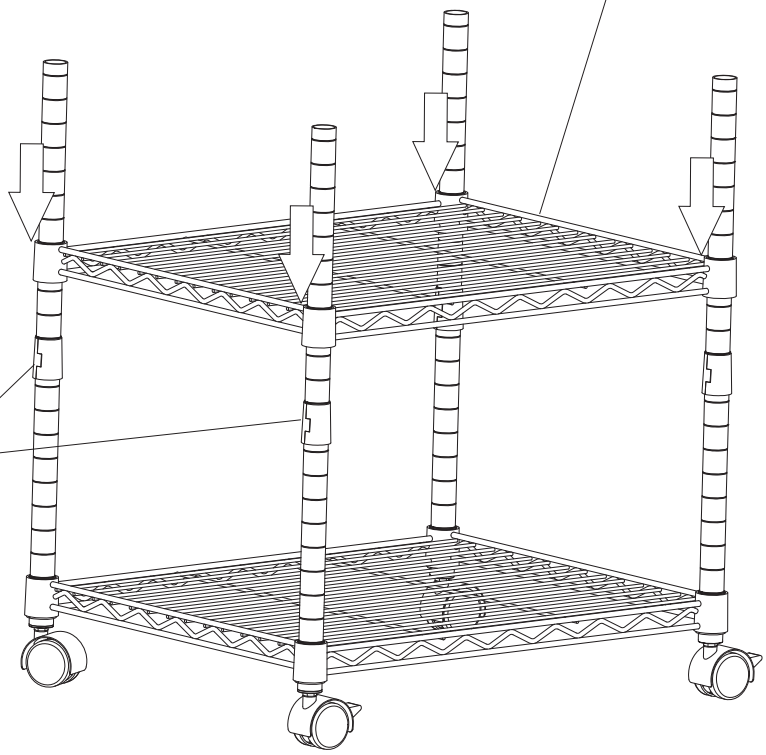

6 D (2 per assembled post)

