MOUNT-IT!

MI-7941A

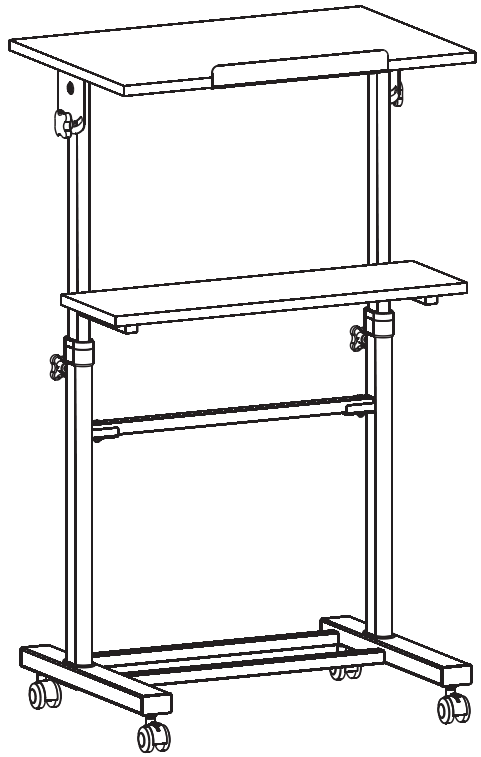

VISIT US AT MOUNT-IT.COM FOR PRODUCT REGISTRATION AND WARRANTY INFORMATION.
CONTACT US AT SUPPORT@MOUNT-IT.COM OR 855-925-5668 FOR QUESTIONS OR COMMENTS.

Mobile Sit-Stand Workstation

ASSEMBLY INSTRUCTIONS

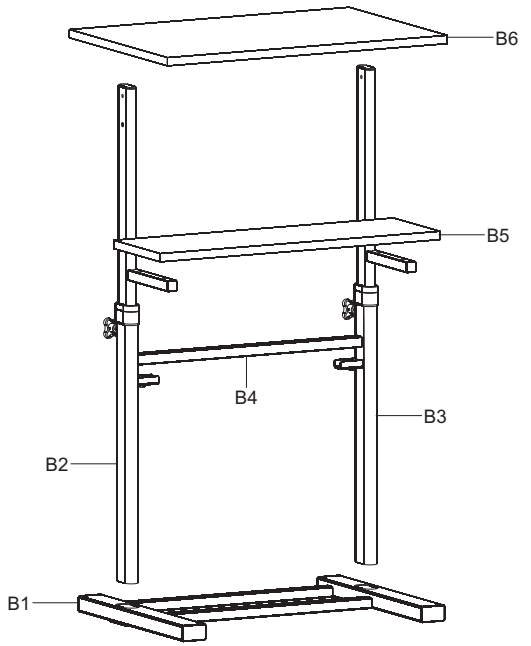

 M6x30 A1 (x8)	 M6x20 A2 (x4)	 M6x12 A3 (x6)	 A4 (x2)
 ¢ 18x ¢ 8.2x2 A5 (x2)	 ¢ 18x ¢ 6.2x0.9 A6 (x4)	 ¢ 18x ¢ 6.2x2 A7 (x2)	 A8 (x1)
 A9 (x1)	 A10 (x1)	 G1 (x2)	 G2 (x2)
 G3 (x2)	 G4 (x1)	 G5 (x1)	 G6 (x2)	 G7 (x1)

1

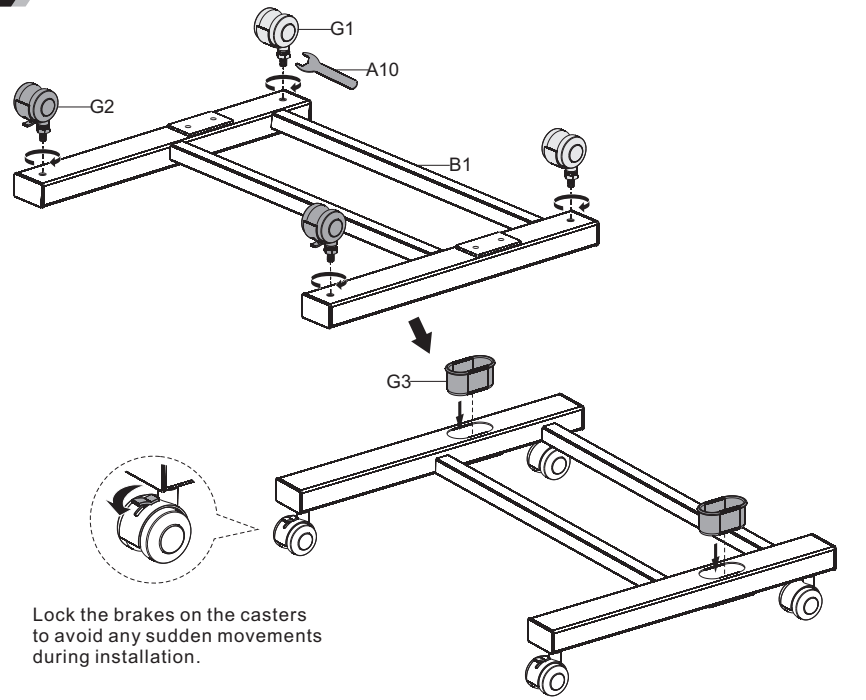

Lock the brakes on the casters to avoid any sudden movements during installation.

2

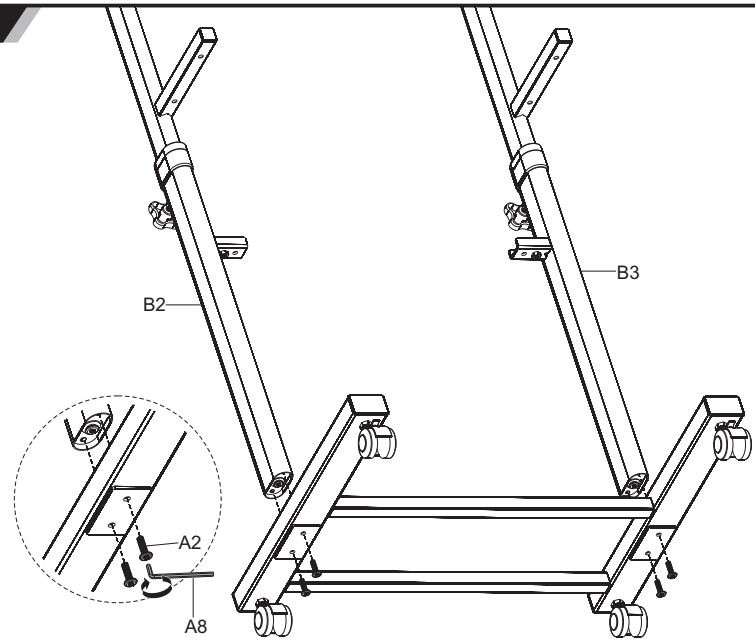

3

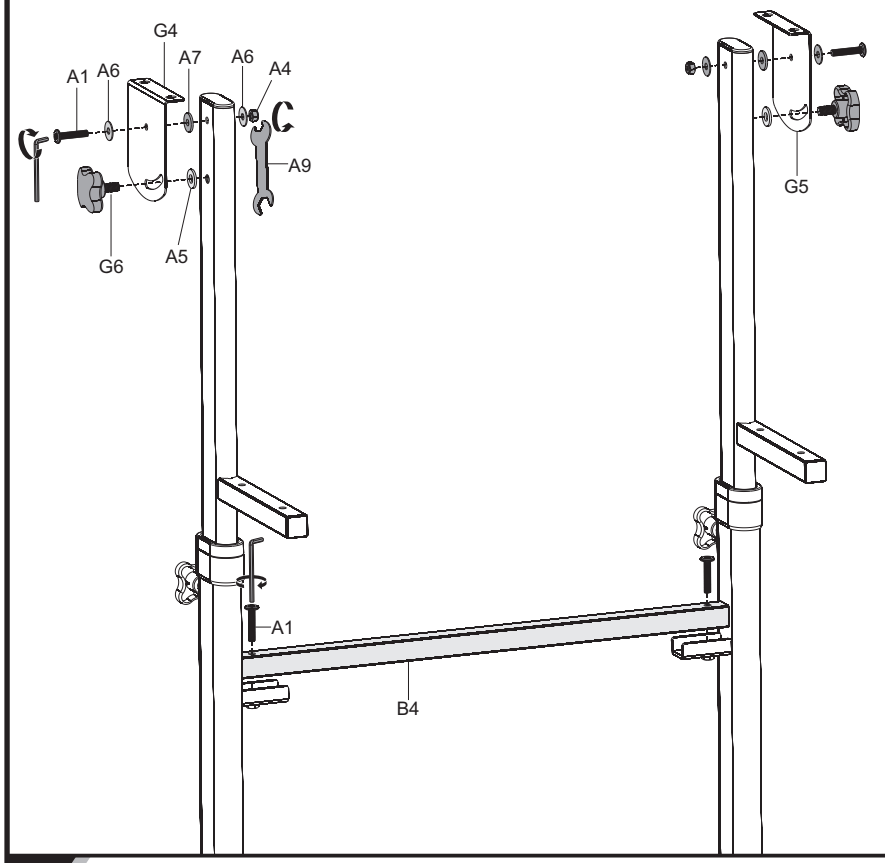

4

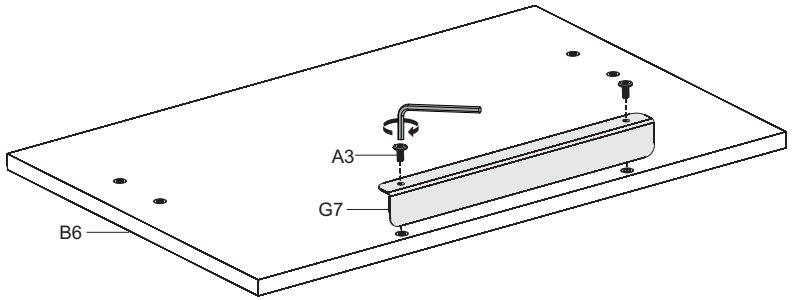

5

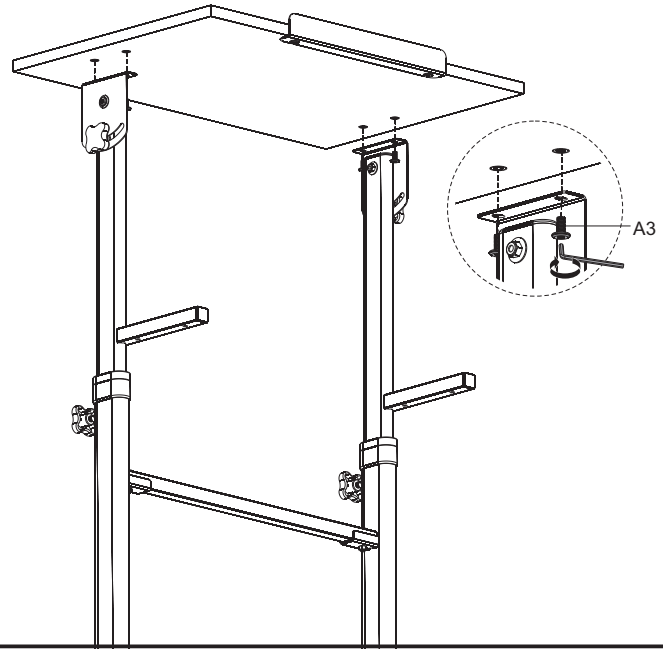

6

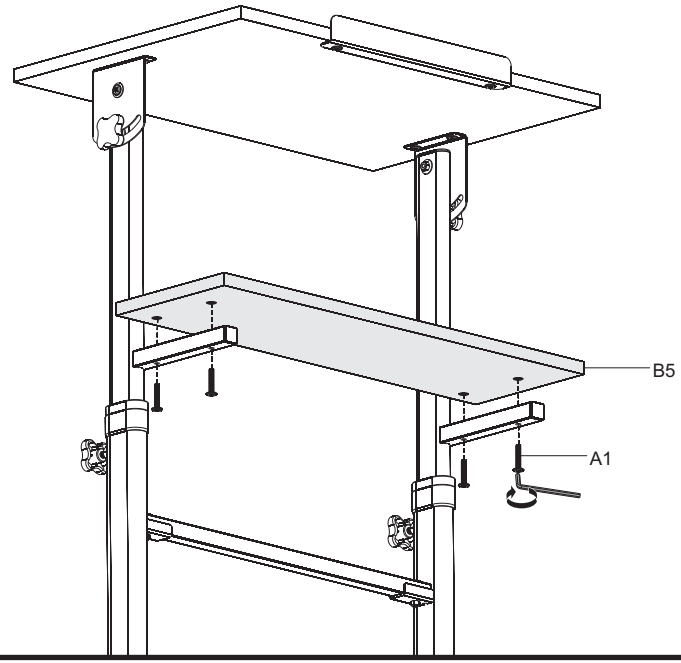

7

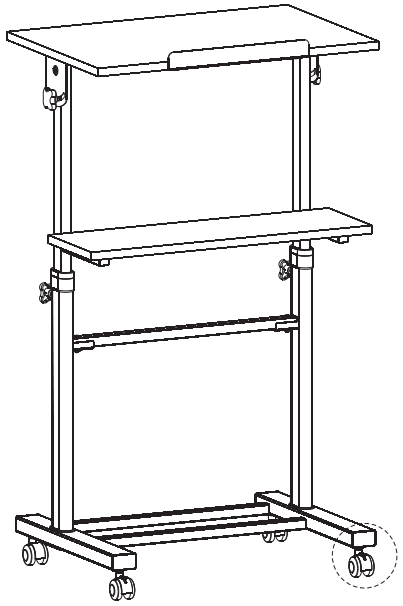

Note: Make sure all casters are at the same height, if not, adjust casters as follow:

Loosen the bottom nut to adjust the height, then tighten the top nut.

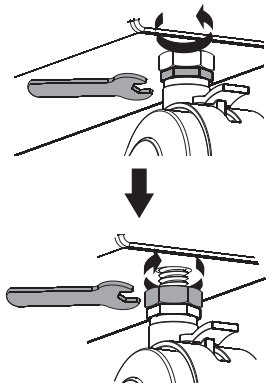

8

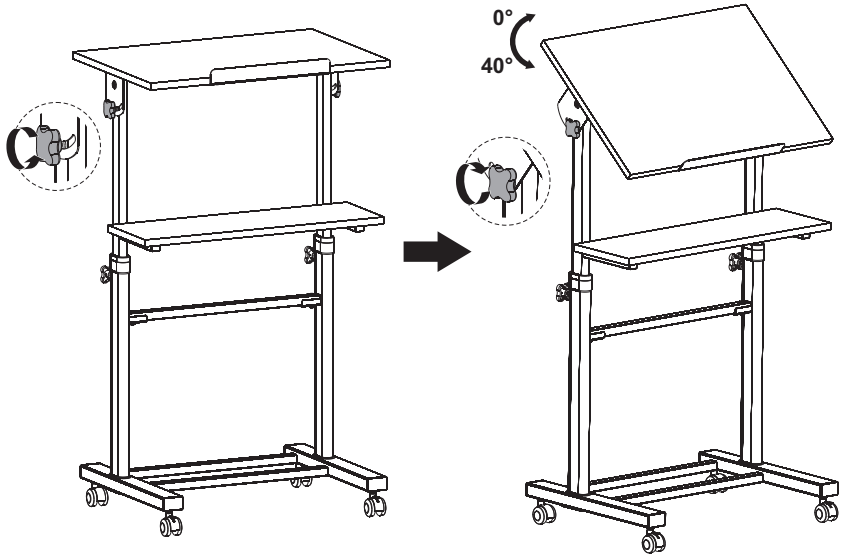

9

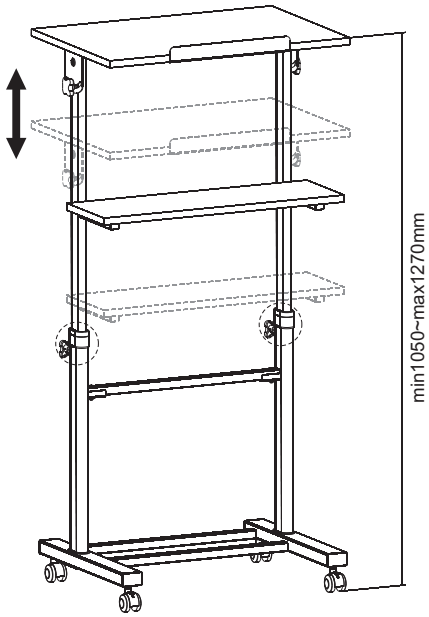

To lift the desk

1. Loosen the knobs
2. Firmly hold the desktops and lift it to desired height until a “click” sound is heard

Note: When the mark MAX is found on the legs, it indicates that you have reached the highest setting and do not continue to lift.

3. Tighten the knobs.

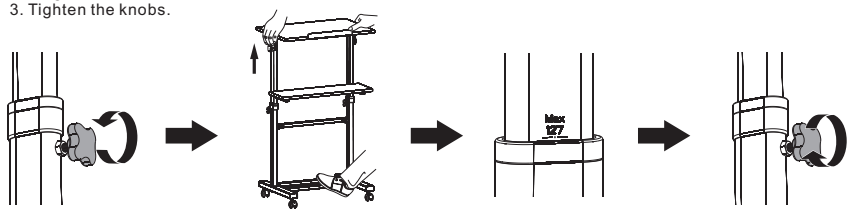

To lower the desk

1. Loosen the knobs
2. Lift the desk directly to the top height until the mark Down is found on the legs, then lower it slowly to the most bottom.
3. Repeat the lifting steps to your desired height.

Note:

- Please do not put anything on the desktops when adjusting the desk height.
- Make sure a “click” sound is heard which indicates the height is fixed securely.

