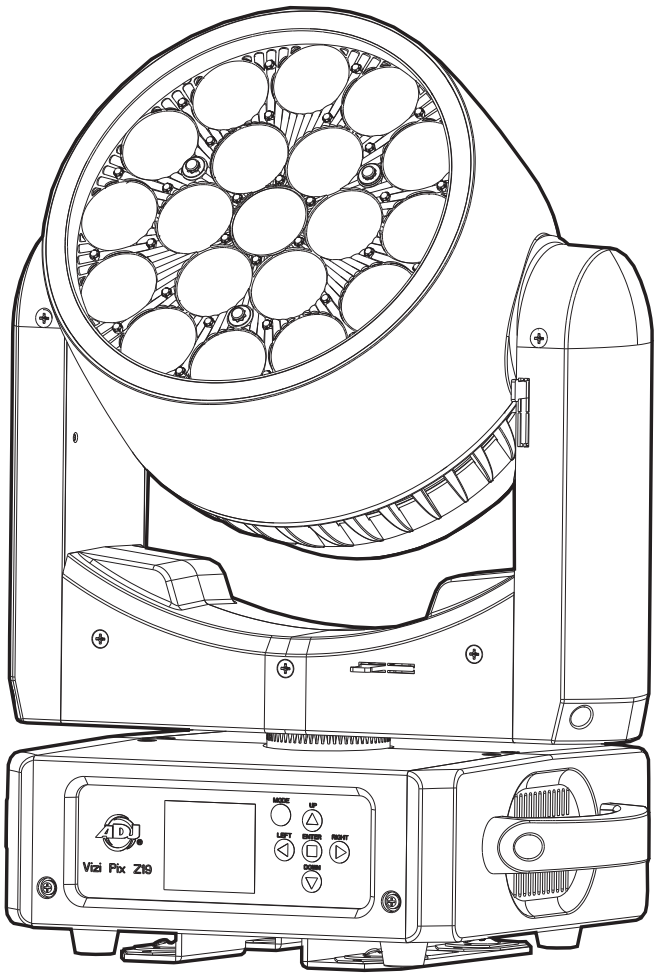

VIZI PIX Z19

User Manual

©2025 ADJ Products, LLC all rights reserved. Information, specifications, diagrams, images, and instructions herein are subject to change without notice. ADJ Products, LLC logo and identifying product names and numbers herein are trademarks of ADJ Products, LLC. Copyright protection claimed includes all forms and matters of copyrightable materials and information now allowed by statutory or judicial law or hereinafter granted. Product names used in this document may be trademarks or registered trademarks of their respective companies and are hereby acknowledged. All non-ADJ Products, LLC brands and product names are trademarks or registered trademarks of their respective companies.

ADJ Products, LLC and all affiliated companies hereby disclaim any and all liabilities for property, equipment, building, and electrical damages, injuries to any persons, and direct or indirect economic loss associated with the use or reliance of any information contained within this document, and/or as a result of the improper, unsafe, insufficient and negligent assembly, installation, rigging, and operation of this product.

Europe Energy Saving Notice
Energy Saving Matters (EuP 2009/125/EC)
Saving electric energy is a key to help protecting the enviroment. Please turn off all electrical products when they are not in use. To avoid power consumption in idle mode, disconnect all electrical equipment from power when not in use. Thank you!

DOCUMENT VERSION

Due to additional product features and/or enhancements, an updated version of this document may be available online.
Please check www.adj.com for the latest revision/update of this manual before beginning installation and/or programming.

Date	Document Version	Software Version	DMX Channels	Notes
07/01/2025	1.0	1.0.0	32 / 43 / 58-A / 58-B / 203 / 123 / 133 Ch	Initial Release

CONTENTS

Introduction	4
Warranty Registration l Features	5
Safety Precautions	6
Overview	8
Installation Guidelines	9
Remote Device Management (RDM)	13
Control Panel	14
System Menu	15
Aria	19
Firmware Updates	20
DMX Set Up	21
DMX Traits	23
Pixel Zones	39
Color Table	40
Color Macros Table	41
Color Temperature Table	43
Dim Modes and Curves	44
Primary-Secondary Set Up l Multi Unit Power Linking	45
Maintenance Guidelines	46
Error Codes l Ordering Information	47
Dimensional Drawings	48
Specifications	49
FCC Statement	50

INTRODUCTION

Unpacking: Thank you for purchasing the Vizi Pix Z19 by ADJ Products, LLC. Every device has been thoroughly tested and has been shipped in perfect operating condition. Carefully check the shipping carton for damage that may have occurred during shipping. If the carton appears to have been damaged, carefully inspect your fixture for any damage and be sure all accessories necessary to operate the unit have arrived intact. In the event that damage has been found or parts are missing, please contact our toll free customer support number for further instructions. Do not return this unit to your dealer without first contacting customer support.

Introduction: Vizi Pix Z19 is a cutting-edge tool for modern lighting designers, delivering a stunning array of dynamic effects and advanced virtual CMY color mixing for an unforgettable live experience. Featuring 19x 30-Watt RGBL LEDs, vibrant RGB background LEDs, and an innovative LED ring, it creates immersive beams, washes, and vibrant color effects that captivate audiences. **This product is intended to be used by professionally trained personnel only and is not suitable for private use.**

WARNING! This unit is intended for indoor use only! Do not expose to rain or moisture!

Customer Support: Contact ADJ Service for any product related service and support needs. Also visit **forums.adj.com** with questions, comments or suggestions.

Parts: To purchase parts online visit:
http://parts.adj.com (US)
http://www.adjparts.eu (EU)

ADJ SERVICE USA - Monday - Friday 8:00am to 4:30pm PST
Voice: 800-322-6337 I support@adj.com

ADJ SERVICE EUROPE - Monday - Friday 08:30 to 17:00 CET
Voice: +31 45 546 85 60 I Fax: +31 45 546 85 96 I support@adj.eu

ADJ PRODUCTS LLC USA
6122 S. Eastern Ave. Los Angeles, CA. 90040
323-582-2650 I www.adj.com I info@adj.com

ADJ SUPPLY Europe B.V
Junostraat 2 6468 EW Kerkrade, The Netherlands
+31 (0)45 546 85 00 I Fax +31 45 546 85 99
www.adj.eu I info@adj.eu

ADJ PRODUCTS GROUP Mexico
AV Santa Ana 30 Parque Industrial Lerma, Lerma, Mexico 52000
+52 (728) 282-7070

LIMITED WARRANTY
For up-to-date warranty information regarding your device, please visit ADJ's warranty information page online or scan the QR codes below.

USA: https://www.adj.com/warranty-information

EU: https://www.adj.eu/terms_and_conditions

WARRANTY REGISTRATION

Please fill out the enclosed warranty card to validate your purchase. All returned service items, whether under warranty or not, must be freight pre-paid and accompanied by a return authorization (R.A.) number. The R.A. number must be clearly written on the outside of the return package. A brief description of the problem as well as the R.A. number must also be written down on a piece of paper included in the shipping carton. If the unit is under warranty, you must provide a copy of your proof of purchase invoice. You may obtain an R.A. number by contacting our customer support team. All packages returned to the service department not displaying an R.A. number on the outside of the package will be returned to the shipper.

FEATURES

- Moving Light Pixel Wash with Effects
- Individual Pixel Control (Foreground & Background LEDs)
- RGB LED Ring
- Built-In Pixel Effect Programs
- Aria X2 Wireless Management System
- Electronic Strobe / Dimmer
- Pan: 540/630
- Tilt: 230/265
- Motorized Zoom
- Color Calibrated Pixels so units match from batch to batch
- Virtual CMY DMX Control Modes
- Virtual Foreground and Background Color Wheel Control
- Selectable LED Refresh Rates (900 Hz~25K Hz)
- Selectable Dim Modes: Standard, Stage, TV, Arch., Theatre, Stage 2 and user settable Dim Speed (0.1S~10S)
- 4 Dim Curves: Square, Linear, Inv. Square and S. Curve
- 0-100% smooth dimming
- Fan Cooled

INCLUDED ITEMS

- 108mm Omega Brackets (x2)
- 2M, IP65-rated locking power cable (x1)

SAFETY PRECAUTIONS



PROTECTION CLASS 1 - FIXTURE MUST BE PROPERLY GROUNDED.



THERE ARE NO USER SERVICEABLE PARTS INSIDE THIS UNIT. DO NOT ATTEMPT ANY REPAIRS YOURSELF, AS DOING SO WILL VOID YOUR MANUFACTURER'S WARRANTY. DAMAGES RESULTING FROM MODIFICATIONS TO THIS FIXTURE AND/OR THE DISREGARD OF SAFETY INSTRUCTIONS AND GUIDELINES IN THIS MANUAL VOID THE MANUFACTURER'S WARRANTY AND ARE NOT SUBJECT TO ANY WARRANTY CLAIMS AND/OR REPAIRS.



DO NOT PLUG FIXTURE INTO A DIMMER PACK!
NEVER OPEN THIS FIXTURE WHILE IN USE!
UNPLUG POWER BEFORE SERVICING FIXTURE!
NEVER TOUCH FIXTURE DURING OPERATION, AS IT MAY BE HOT!
KEEP FLAMMABLE MATERIALS AWAY FROM FIXTURE!



NEVER LOOK DIRECTLY INTO THE LIGHT SOURCE!
RETINA INJURY RISK - MAY INDUCE BLINDNESS!
SENSITIVE PERSONS MAY SUFFER AN EPILEPTIC SHOCK!



INDOOR / DRY LOCATIONS USE ONLY!
DO NOT EXPOSE FIXTURE TO RAIN AND/OR MOISTURE!



MINIMUM DISTANCE TO OBJECTS IS 1.5 FEET (0.5 METERS)
MINIMUM DISTANCE TO LIGHTED OBJECTS IS 1.5 FEET (0.5 METERS)
MINIMUM DISTANCE OF FLAMMABLE MATERIALS FROM THE SURFACE IS 8 INCHES (0.2 METERS)
AMBIENT OPERATING TEMPERATURE IS 14°F TO 104°F (-10°C TO 40°C)

SAFETY PRECAUTIONS

- ***Ambient operating temperature range is 14°F to 104°F (-10°C to 40°C)!***
- DO NOT expose to rain or moisture, or spill liquids into or onto the device! Any damage resulting from these conditions may void the manufacturer's warranty.
- DO NOT TOUCH the fixture housing during operation. Disconnect the power and allow approximately 15 minutes for the fixture to cool down before servicing.
- DO NOT shake the fixture, and avoid brute force when installing and/or operating the fixture.
- DO NOT operate the fixture if the power cord has become frayed, crimped and/or damaged. If the power cord is damaged, replace immediately with a new one of the same power rating.
- DO NOT attempt to remove or break off the ground prong from the electrical cord. This prong is used to reduce the risk of electrical shock and fire in case of an internal short.
- DO NOT attempt to operate this unit if it has been damaged in any way.
- Disconnect from main power before making any type of connection.
- DO NOT block any air ventilation slots. All fan and air inlets must remain clean and never blocked. Allow approx. 1.5 feet (0.5m) between fixture and other devices or a wall for proper cooling.
- Always be sure to mount this unit in an area that will allow proper ventilation. Allow about 1.5 feet (0.5m) between this device and a wall.
- DO NOT remove the cover for any reason.
- When installing fixture in a suspended enviroment, always use mounting hardware that is no less than M10 x 25mm, and always install fixture with an appropriately rated safety cable.
- Never plug this unit in to a dimmer pack.
- During long periods of non-use, disconnect the unit's main power.
- Always mount this unit in safe and stable matter.
- Power-supply cords should be routed so that they are not likely to be walked on or pinched by items placed upon or against them, paying particular attention to the point where they exit from the unit.
- Cleaning - The fixture should be cleaned only as recommended by the manufacturer.
- Heat - The appliance should be situated away from heat sources such as radiators, heat registers, stoves, or other appliances (including amplifiers) that produce heat.
- The fixture should be serviced by qualified service personnel when:
  A. The power-supply cord or the plug have been damaged.
  B. Objects have fallen onto, or liquids have been spilled into, the fixture.
  C. The fixture does not appear to operate normally or exhibits a marked change in performance.
  D. The fixture has fallen and/or has been subjected to extreme handling.

OVERVIEW

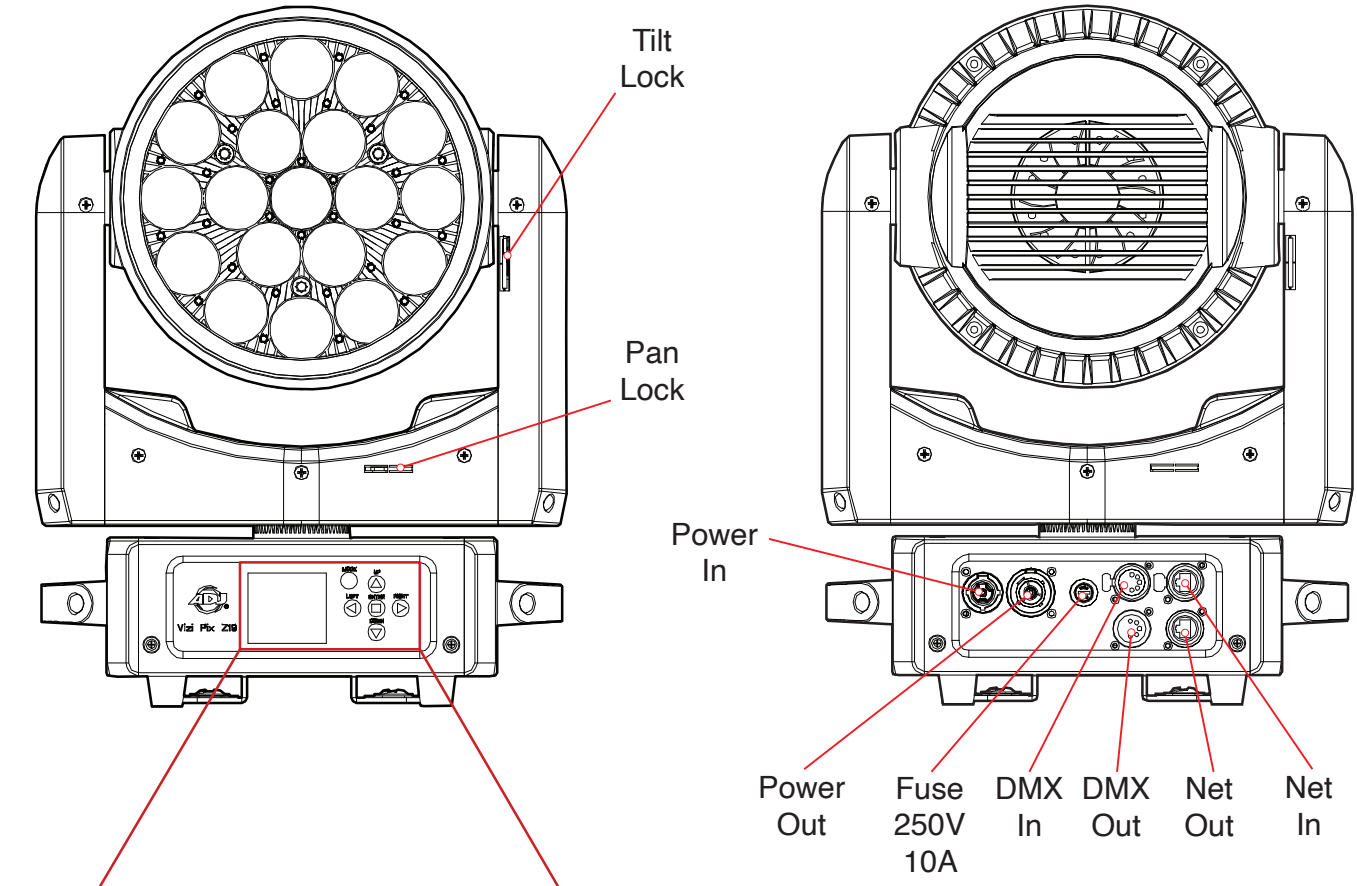
Tilt Lock
Pan Lock
Power In
Power Out
Fuse 250V 10A
DMX In
DMX Out
Net Out
Net In
MODE
UP
LEFT
ENTER
RIGHT
DOWN
Up Button
Right Button
Display Screen
Mode Button
Left Button
Down Button
Enter Button
Omega Bracket Attachment Points
Omega Bracket Attachment Points

INSTALLATION GUIDELINES



DO NOT INSTALL THE FIXTURE IF YOU ARE NOT QUALIFIED TO DO SO!

Fixture MUST be installed following all local, national, and country commercial electrical and construction codes and regulations.

When installing the unit, the trussing or area of installation must be able to hold 10 times the weight of the unit and any attached accessories without any deformation. The unit must be secured with a secondary safety attachment, e.g. an appropriately-rated safety cable.

Before rigging/mounting a single fixture to any metal truss/structure or placing the fixture(s) on any surface, a professional equipment installer MUST be consulted to determine if the metal truss/structure or surface is properly certified to safely hold the combined weight of the fixture(s), clamps, cables, and accessories.

Maximum ambient operating temperature range is ***14°F to 104°F (-10°C to 40°C).*** Do not operate this device when ambient temperature falls outside this range.

Fixture(s) should be installed away from walking paths, seating areas, or areas where unauthorized personnel might reach the fixture by hand.

NEVER stand directly below the fixture(s) when rigging, removing, or servicing.

Overhead fixture installation must always be secured with a secondary safety attachment, such as an appropriately rated safety cable that can hold 10 times the weight of the fixture.

Overhead mounting requires extensive experience, including calculating working load limits, knowledge of installation material being used, and perodic safety inspection of all installation material as well as the unit itself. If you lack these qualifications, do not attempt the installation yourself.

The installation should be checked by a skilled person once a year.

It is strongly recommended to power the fixture down completely when not in use. Doing so will reduce wear on the fixture due to sustained or extended operational periods, thereby maximizing the fixture's operational lifespan.

INSTALLATION GUIDELINES

CLAMP MOUNTING

This fixture features mounting holes on the underside of the base for the installation of Omega brackets. When mounting the fixture to a truss or any other suspended structure, insert a bolt of appropriate size through the bottom of the mounting clamp and the central hole on the Omega bracket, and secure them together with a matching nut and washer. Then insert the twist lock fasteners of the Omega bracket into the mounting holes on the fixture, and twist to secure in place. **Please note that two (2) Omega brackets are required to safety and securely install this fixture!** Additionally, a safety cable of the appropriate weight rating should be secured to the provided safety cable attachment point beneath the Omega brackets.

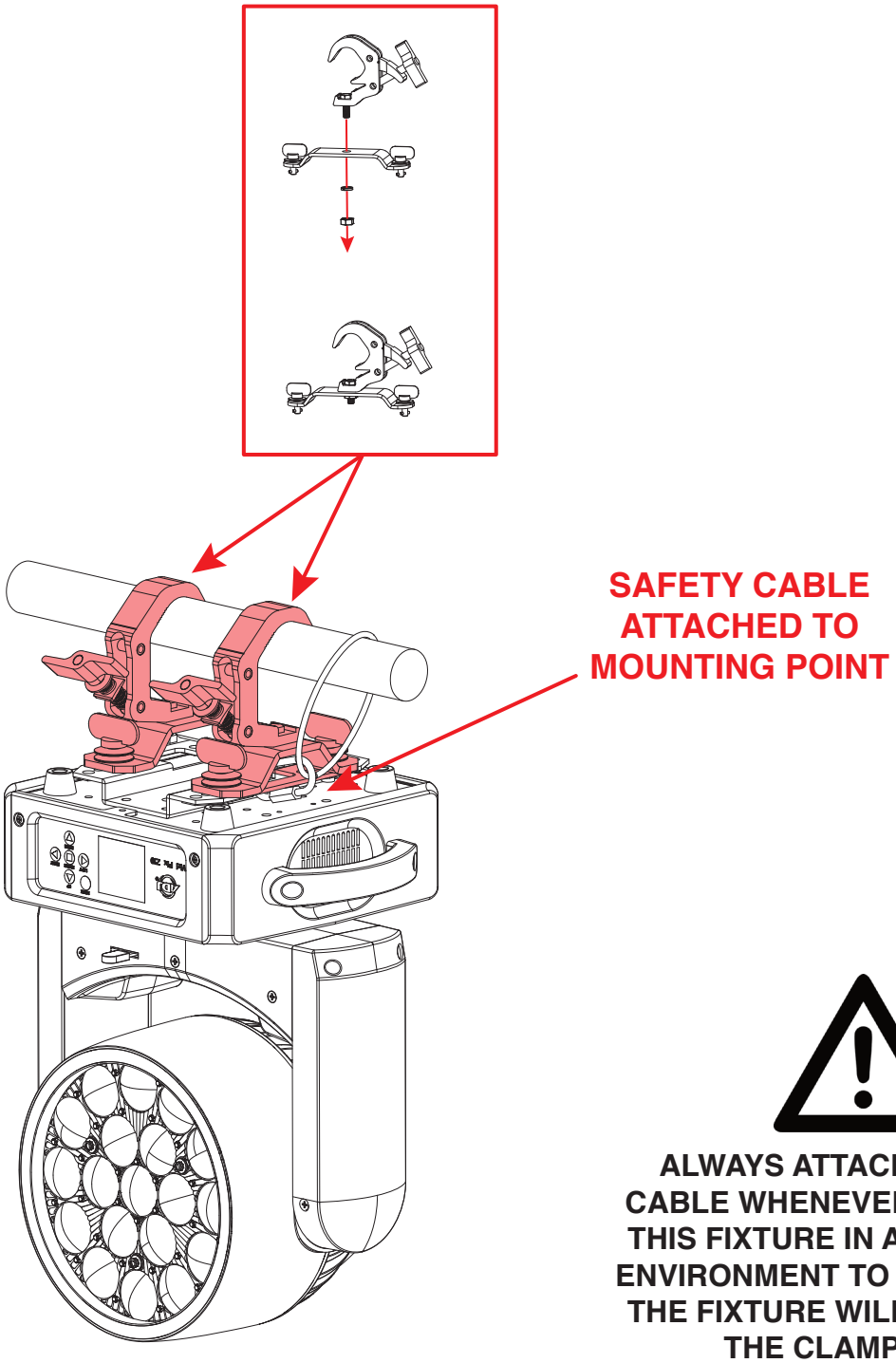

ALWAYS ATTACH A SAFETY CABLE WHENEVER INSTALLING THIS FIXTURE IN A SUSPENDED ENVIRONMENT TO ENSURE THAT THE FIXTURE WILL NOT FALL IF THE CLAMP FAILS.

INSTALLATION GUIDELINES

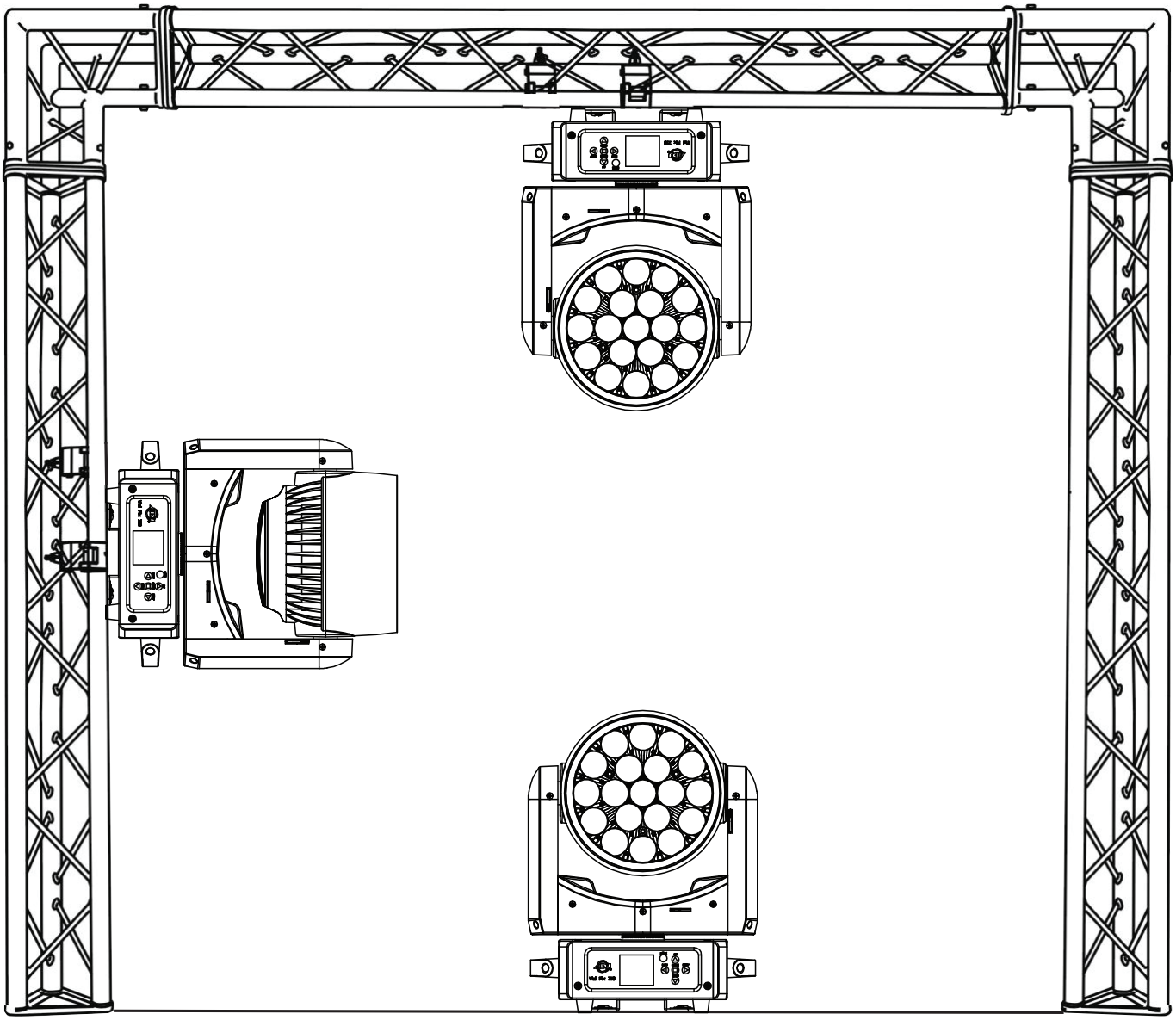

The unit is fully operational in three different mounting positions: hanging upside-down from the ceiling or trussing, sideways on trussing, or set on a flat level surface. Be sure this fixture is kept at least 9.8 ft (3m) away from any flammable materials (decorations, etc). Always use and install a safety cable (not included) as a safety measure to prevent accidental damage and/or injury in the event the clamp fails. Never use the carrying handles for secondary attachment.

FALLING FIXTURES CAN CAUSE SEVERE INJURY OR SERIOUS EQUIPMENT DAMAGE! FOR THIS REASON, FIXTURES SHOULD BE INSTALLED AND INSPECTED ONLY BY QUALIFIED PERSONNEL. DO NOT INSTALL THE UNIT IF YOU LACK THE QUALIFICATIONS TO DO SO, OR IF YOU HAVE DOUBTS ABOUT THE SAFETY AND SECURITY OF THE INSTALLATION SETUP OR LOCATION!

ALWAYS ATTACH A SAFETY CABLE WHENEVER INSTALLING THIS FIXTURE IN A SUSPENDED ENVIRONMENT TO ENSURE THE FIXTURE WILL NOT FALL IF THE CLAMP FAILS.

INSTALLATION GUIDELINES

POTENTIAL INTERNAL FIXTURE DAMAGE FROM EXTERNAL SOURCES OF LIGHT BEAMS

External sources of light beams from direct sunlight, lighting moving head fixtures, and lasers, which are focused directly towards the exterior housing and/or penetrate the front lens opening of ADJ lighting fixtures, can cause severe internal damage including burning to optics, dichroic color filters, glass and metal gobos, prisms, animation wheels, frost filters, iris, shutters, motors, belts, wiring, discharge lamps, and LEDs.

This issue is not specific only to ADJ lighting fixtures, it is a common issue with lighting fixtures from all manufacturers. Although there is no true way to fully prevent this issue from happening, the guidelines below can prevent any potential damage from occurring if followed. Contact ADJ Service for more details.

DO NOT EXPOSE THE FIXTURE AND/OR FRONT LENS OPENING TO LIGHT BEAMS FROM DIRECT SUNLIGHT, OTHER LIGHTING MOVING HEAD FIXTURES, AND LASERS WHILE UNPACKING, INSTALLATION, USE, AND EXTENDED IDLE TIMES OUTDOORS. DO NOT FOCUS A LIGHT BEAM FROM ONE LIGHTING FIXTURE DIRECTLY TOWARDS ANOTHER.

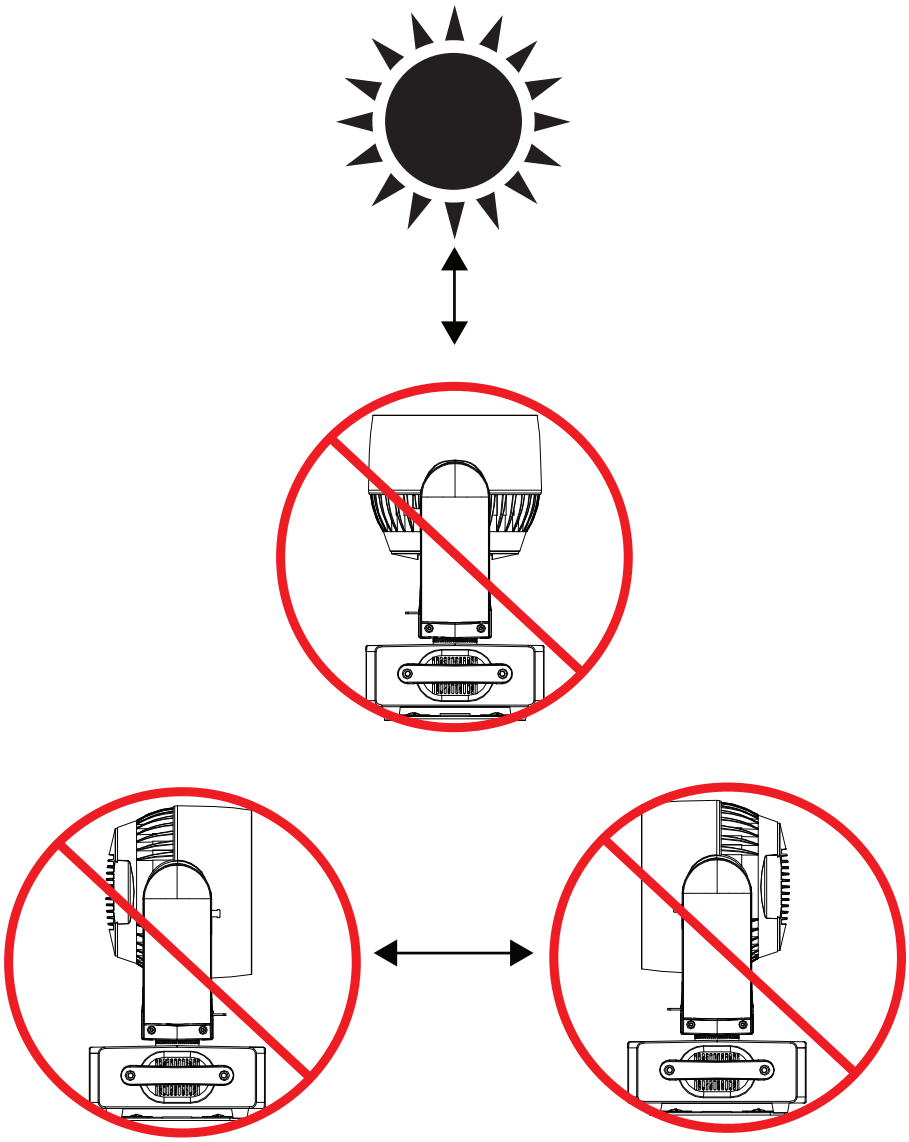

REMOTE DEVICE MANAGEMENT (RDM)

NOTE: In order for RDM to work properly, RDM enabled equipment must be used throughout the entire system, including DMX data splitters and wireless systems.

Remote Device Management (RDM) is a protocol that sits on top of the DMX512 data standard for lighting, allowing the DMX systems of the fixtures to be modified and monitored remotely. This protocol is ideal for instances in which a unit is installed in a location that is not easily accessible.

With RDM, the DMX512 system becomes bi-directional, allowing a compatible RDM enabled controller to send out a signal to devices on the wire, as well as allowing the fixture to respond (known as a *GET* command). The controller can then use its *SET* command to modify settings that would typically have to be changed or viewed directly via the unit's display screen, including the DMX Address, DMX Channel Mode, and Temperature Sensors.

FIXTURE RDM INFORMATION:

RDM Code	Device ID	Device Model ID	Personality ID
0x1900	003C	60	32Ch, 43Ch, 58Ch-A, 58Ch-B, 203Ch, 123Ch, 133Ch

Please be aware that not all RDM devices support all RDM features, and therefore it is important to check beforehand to ensure that the equipment that you are considering includes all of the features that you require.

CODE	PARAMETER
0x0001	Disc Unique Branch
0x0002	Disc Mute
0x0003	Disc Un Mute
0x0050	Supported Parameters
0x0051	Parameter Description
0x0060	Device Info
0x00C0	Software Version Label
0x00F0	DMX Start Address
0x1000	Identify Device
0x0080	Device Model Description
0x0081	Manufacturer Label
0x0082	Device Label
0x00E0	DMX Personality
0x00E1	DMX Personality Description
0x0400	Device Hours
0x0600	Pan Invert
0x0601	Tilt Invert
0x0602	Pan Tilt Swap

CONTROL PANEL

This unit features a display screen with a 6-button control pad, which can be used to easily adjust any device settings.

Pressing the MODE button will cycle through the various Main Menu options. When the desired Main Menu option is displayed on the screen, press the ENTER button to enter the sub-menu, then use the UP, DOWN, LEFT, and RIGHT buttons to scroll through sub-menu options. In some cases, there will be a second sub-menu that can be navigated in the same way. Press MODE at any time to exit without making changes.

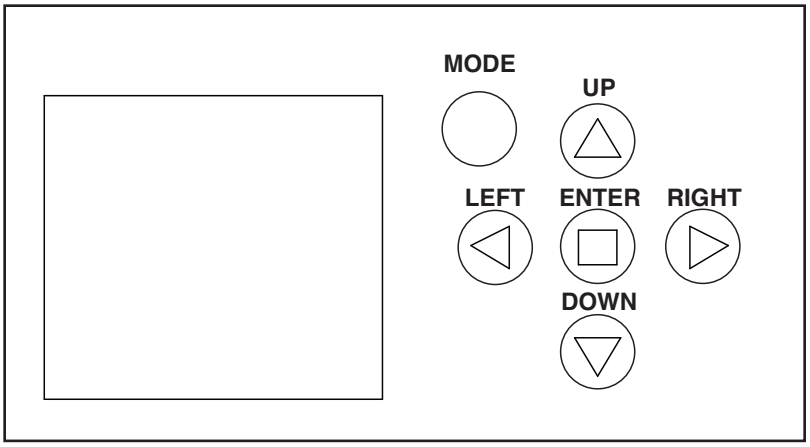

CONTROL KEY LOCK

The control panel screen can be set to lock after a period of inactivity. This feature is turned off by default, but this can changed by navigating to Personality > Display > Key Lock in the system menu.

- OFF: Control keys are always active. This is the default setting.
- ON: Control keys will lock after a certain period of inactivity, which can be defined or switched off entirely in the Personality > Display > Screen Saver Delay section of the system menu. To unlock the keys, press and hold the MODE button for 3 seconds.
- ON1: Control keys will lock after a certain period of inactivity, which can be defined or switched off entirely in the Personality > Display > Screen Saver Delay section of the system menu. To unlock the keys, press UP, DOWN, UP, DOWN, ENTER.

SOFTWARE UPDATE

For software updates, please contact ADJ customer support.

ADJ SERVICE USA - Monday - Friday 8:00am to 4:30pm PST
323-582-2650 l support@adj.com

ADJ SERVICE EUROPE - Monday - Friday 08:30 to 17:00 CET
+31 45 546 85 60 l Fax: +31 45 546 85 96 l support@adj.eu

SYSTEM MENU

MAIN MENU	OPTIONS / VALUES (Default Settings in **BOLD**)			
DMX SETTINGS	DMX Address	**001** - XXX		
	DMX Channel	Basic 32Ch		
		Standard 43Ch		
		Ring M1 58Ch		
		Ring M2 58Ch		
		Extended 203Ch		
		Standard CMY 123Ch		
		Extended CMY 133Ch		
		User Mode (custom user-defined DMX mode)		
	No DMX	**Hold Last**		
		Blackout		
		Manual		
		Internal Programs		
PERSONALITY	Prim/Sec Mode	Primary / **Secondary**		
	Select Signal	**DMX or Aria**		
		Aria In and DMX Out		
	Aria Settings	Aria Enable	On / **Off**	
		Frequency	**2.4GHz**	
			Sub Gig US	
			Sub Gig EU	
		2.4GHz Ch	**00** - 15	
		Sub Gig Ch	**00** - 09	
		Mesh	On / **Off**	
		RDM	**On** / Off	
		Bluetooth	**On** / Off	
	Network	Input	**On** / Off	
		Protocol	**ArtNet** / sACN	
		KlingNet	On / **Off**	
		Address	Set Universe	**000** - 32767
			IP Address	**002.001.001.001**
			Subnet Mask	**255.000.000.000**
	Status Settings	Pan Degree	630 / **540**	
		Tilt Degree	**265** / 230	
		Pan Invert	On / **Off**	
		Tilt Invert	On / **Off**	
		P/T Feedback	**On** / Off	
		P/T Speed	**Fast** / Standard	
		Hibernation	Off, 01min - 99min, default = **15min**	

SYSTEM MENU

MAIN MENU	OPTIONS / VALUES (Default Settings in **BOLD**)		
PERSONALITY (continued)	Fan Settings	**Auto**	
		High	
		Low	
		Mute	
	Zoom Speed	**Standard** / Fast	
	Zoom Mode	**Max**	
		Limited	
	LED Power Mode	**Max**	
		Standard	
	Dim Modes	**Standard**	
		Stage	
		TV	
		Architectural	
		Theatre	
		Stage 2	
		Dim Speed	0.1s - 10s
	LED Refresh	900-1500Hz, 2500Hz, 4000Hz, 5000Hz, 6000Hz, 10KHz, 15KHz, 20KHz, 25KHz, default = **1200Hz**	
	Dim Curve	Linear	
		Square	
		Inv Square	
		S Curve	
	Reset Motors	Reset All Motors	Yes / **No**
		Pan/Tilt Reset	Yes / **No**
		Effect Reset	Yes / **No**
	Display	Intensity	1 - **10**
		Display Invert	**Auto** / Yes / No
		Screen Saver Delay	Off, 1min - 10min, default = **5min**
		Key Lock	**Off**
			On (press and hold MODE for 3 s to unlock)
			On1 (press UP, DOWN, UP, DOWN, ENTER to unlock)

SYSTEM MENU

MAIN MENU	OPTIONS / VALUES (Default Settings in **BOLD**)			
PERSONALITY (continued)	Set User Mode	Pan	**1**	
		Pan Fine	**2**	
		Tilt	**3**	
		Tilt Fine	**4**	
		Red 1	**5**	
		Green 1	**6**	
		Blue 1	**7**	
		Lime 1	**8**	
		...	**...**	
		Red 19	**77**	
		Green 19	**78**	
		Blue 19	**79**	
		Lime 19	**80**	
		...	**...**	
		Internal Programs	**199**	
		Program Speed	**200**	
		Program Fade	**201**	
		P/T Speed	**202**	
		Special	**203**	
	Service	Passcode = 050	Effect Adjust	Pan -127 - 127
				Tilt -127 - 127
				Zoom -127 - 127
				Red 000 - 255
				Green 000 - 255
				Blue 000 - 255
				Lime 000 - 255
				Red Background 000 - 255
				Green Background 000 - 255
				Blue Background 000 - 255
				Red Ring 000 - 255
				Green Ring 000 - 255
				Blue Ring 000 - 255
			Color Calibration	Enable / **Disable**
			Factory Restore	No / Yes

SYSTEM MENU

MAIN MENU	OPTIONS / VALUES (Default Settings in **BOLD**)			
MANUAL CONTROL	Pan	000 - 255		
	Pan Fine	000 - 255		
	Tilt	000 - 255		
	Tilt Fine	000 - 255		
	...	...		
INTERNAL PROGRAMS	Program 1	Speed	000 - 255	
		Fade	000 - 255	
	Program 2	Speed	000 - 255	
		Fade	000 - 255	
	...	...	...	
	Program 20	Speed	000 - 255	
		Fade	000 - 255	
INFORMATION	Fixture Life Time	Power On Time	xxxxxx Hours	
		P-On Time-R	xxxxxx Hours	
		P-On Time-Reset	Passcode = 050	
	Total LED Time	LED On Time	xxxxxx Hours	
		LED On Time-R	xxxxxx Hours	
		LED Hours Reset	Passcode = 050	
	Fixture Temps	LEDs	Current	xxx F / xxx C
			Max Resettable	xxx F / xxx C
		Base Temp	Current	xxx F / xxx C
			Max Resettable	xxx F / xxx C
		Reset LED Temp	Passcode = 050	
		Reset Base Temp	Passcode = 050	
	Fan Info	LED Fan	xxxx	
		Base Fan	xxxx	
	DMX Values	Pan		
		Pan Fine		
		...		
	Error Logs	Error 1, Error 2, ... (List error one by one)		
		Reset Error Log	Passcode = 050	
	Software Version	x.xx		
	RDM ID	RDM ID xxxxxxxxxxxx		
	Aria ID	UID xx:xx:xx:xx:xx:xx		

2.4GHZ VERSUS SUB-GIG (GHZ) FREQUENCIES:

Sub-GHz frequencies provide superior reliability and range compared to higher frequencies, making them perfect for consistent communication across vast distances or in difficult conditions. Devices operating in the sub-GHz range, which refers to frequencies below 1 GHz, can transmit signals over significant distances and can penetrate physical barriers such as walls and buildings more effectively. Additionally, these frequencies experience less interference compared to those in the heavily congested 2.4-GHz band, which is commonly used by wireless devices.

In the United States, the 900 MHz band is a versatile frequency range that is utilized by various services, with the FCC overseeing its allocation and regulation.

In the European Union, the 868 MHz frequency is designated by ETSI as the Sub-Gig frequency.

In summary, if an application demands high data rates and more bandwidth in urban or densely populated areas where interference management is feasible, the 2.4 GHz frequency is a suitable choice. On the other hand, for applications requiring long-range communication and better obstacle penetration, particularly in rural or industrial settings with fewer regulatory constraints, a sub-GHz frequency (<1 GHz) is a better option.

INSTALLATION RECOMMENDATIONS:

With the many factors that affect and/or interrupt a wireless signal such as walls, glass, metal, objects, and people, it is highly recommended to:

- Install devices a minimum of 9.8 ft. (3m) above audiences and/or ground level where practical.
- Adjust the wireless antenna in a vertical upright position
- Position devices in direct line of sight of the controlling device

Careful planning and testing of the selected installation location is critical to ensure optimum and reliable wireless operation.

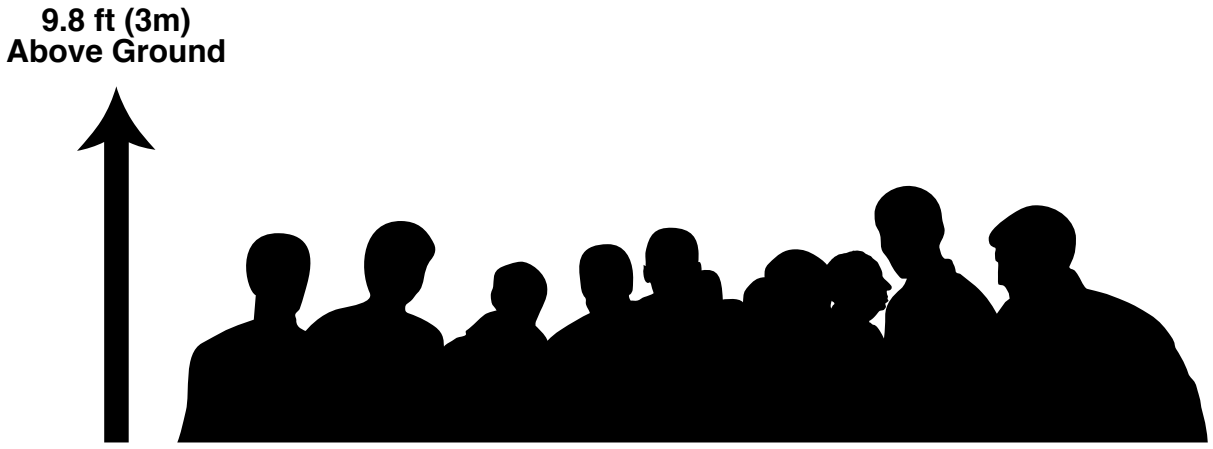

FIRMWARE UPDATES

Firmware updates for the Vizi Pix Z19 can be performed wirelessly via Bluetooth using the **Aria X2 BLE iOS App**, available for download on the Apple App Store. This convenient over-the-air update process allows you to keep your devices up to date with minimal effort.

TYPES OF FIRMWARE UPDATES

There are two firmware components that can be updated through the app:

- **Fixture Update** – Updates the internal program that runs the **Vizi Pix Z19**.
- **Aria Update** – Updates the program that runs the **Aria module**.

Important: Ensure that the Aria firmware is up to date on each fixture before performing a Fixture firmware update.

PERFORMING A FIRMWARE UPDATE

1. **Open the Aria X2 BLE iOS App** on your device.
2. Navigate to the **"Settings"** tab.
3. Select the **type of firmware** you wish to update: **Fixture** or **Aria**.
4. A list of available fixtures will appear. **Aria firmware updates** can be applied to all devices in a single batch if desired. However, **Fixture firmware updates must be performed by fixture model**—do not mix different models in a single update batch. Use the checkmark toggles to select or deselect fixtures for the update. Updates can be scheduled for any detected devices, even if they are not currently supported with a profile. The app automatically manages connections, so no manual pairing is needed.
5. Tap **"Select File"** at the top of the screen. This will bring up a list of available firmware files.
   - Firmware files are stored locally in the app's Firmware folder.
   - When connected to the internet, additional files are available via the app's cloud service.
6. Choose the appropriate firmware file from the local or online list.
7. Tap **"Update"** at the top of the screen to begin the update process.

Note: If multiple devices are selected, the update will proceed sequentially - each device will be updated one after the other.

DMX SET UP

DMX-512: DMX is short for Digital Multiplex. This is a universal protocol used as a form of communication between intelligent fixtures and controllers. A DMX controller sends DMX data instructions from the controller to the fixture. DMX data is sent as serial data that travels from fixture to fixture via the DATA “IN” and DATA “OUT” XLR terminals located on all DMX fixtures (most controllers only have a DATA “OUT” terminal).

DMX Linking: DMX is a language allowing all makes and models of different manufacturers to be linked together and operate from a single controller, as long as all fixtures and the controller are DMX compliant. To ensure proper DMX data transmission, try to use the shortest cable path possible when linking several DMX fixtures. The order in which fixtures are connected in a DMX line does not influence the DMX addressing. For example, a fixture assigned a DMX address of 1 may be placed anywhere in a DMX line: at the beginning, at the end, or anywhere in the middle. When a fixture is assigned a DMX address of 1, the DMX controller knows to send DATA assigned to address 1 to that unit, no matter where it is located in the DMX chain.

Data Cable (DMX Cable) Requirements (For DMX Operation): This unit can be controlled via DMX-512 protocol. The DMX address is set on the rear panel of the unit. Your unit and your DMX controller require a standard 5-pin XLR connector for data input and data output. We recommend Accu-Cable DMX cables. If you are making your own cables, be sure to use standard 110-120 Ohm shielded cable (This cable may be purchased at almost all pro lighting stores). Your cables should be made with a male XLR connector at one end and a female XLR connector at the other. Also remember that DMX cable must be daisy chained and cannot be split.

Notice: Be sure to follow the illustration below when making your own cables. Do not use the ground lug on the XLR connector. Do not connect the cable’s shield conductor to the ground lug or allow the shield conductor to come in contact with the XLR’s outer casing. Grounding the shield could cause a short circuit and erratic behavior.

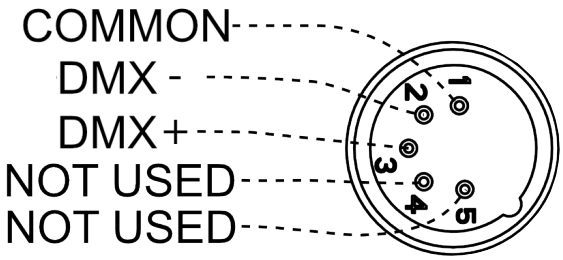

DMX SET UP

Special Note: Line Termination. When longer runs of cable are used, you may need to use a terminator on the last unit to avoid erratic behavior. A terminator is a 110-120 ohm 1/4 watt resistor which is connected between pins 2 and 3 of a male XLR connector (DATA + and DATA -). This unit is inserted in the female XLR connector of the last unit in your daisy chain to terminate the line. Using a cable terminator (ADJ part number Z-DMX/T) will reduce the risk of erratic behavior.

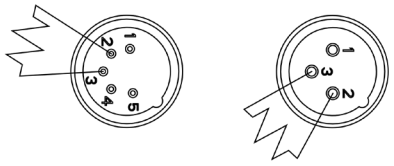

A DMX512 terminator reduces signal errors, avoiding most signal reflection interference. Connect PIN 2 (DMX-) and PIN 3 (DMX+) of the last fixture in series with a 120 Ohm, 1/4 W Resistor to terminate the DMX512.

DMX ADDRESSING.

All fixtures should be given a DMX starting address when using a DMX controller, so the correct fixture responds to the correct control signal. This digital starting address is the channel number from which the fixture starts to “listen” to the digital control signal sent out from the DMX controller. The assignment of this starting DMX address is achieved by setting the correct DMX address on the digital control display on the fixture.

You can set the same starting address for all fixtures or a group of fixtures, or set different addresses for each individual fixture. Setting all fixtures to the same DMX address will cause all fixtures to react in the same way. In other words, changing the settings of one channel will affect all the fixtures simultaneously.

If you set each fixture to a different DMX address, each unit will start to “listen” to the channel number you have set, based on the quantity of DMX channels of each fixture. That means changing the settings of one channel will only affect the selected fixture. For example, when this unit is operating in 32 channel mode, you should set the starting DMX address of the first unit to 1, the second unit to 33 (1 + 32), the third unit to 65 (1 + 32 + 32), and so on. See the chart below for more details.

CHANNEL MODE	UNIT 1 ADDRESS	UNIT 2 ADDRESS	UNIT 3 ADDRESS	UNIT 4 ADDRESS
32Ch	1	33	65	97
43Ch	1	44	87	130
58Ch-A / 58Ch-B	1	59	117	175
203Ch	1	204	407	610
123Ch	1	124	247	370
133Ch	1	134	267	400

DMX TRAITS

Features subject to change without notice								
MODE / CHANNELS							VALUES	FUNCTION
32 Ch	43 Ch	58 Ch-A	58 Ch-B	203 Ch	123 Ch	133 Ch		
1	1	1	1	1	1	1	000 - 255	**Pan Movement** 8-bit Movement, 540/630 degrees
	2	2	2	2	2	2	000 - 255	**Pan Fine Movement** Fine 16-bit Adjustment
2	3	3	3	3	3	3	000 - 255	**Tilt Movement** 8-bit Movement, 270 degrees
	4	4	4	4	4	4	000 - 255	**Tilt Fine Movement** Fine 16-bit Adjustment
3	5						000 - 255	**Red** 0 - 100%
4	6						000 - 255	**Green** 0 - 100%
5	7						000 - 255	**Blue** 0 - 100%
6	8						000 - 255	**Lime** 0 - 100%
				5			000 - 255	**Red 1** 0 - 100%
				6			000 - 255	**Green 1** 0 - 100%
				7			000 - 255	**Blue 1** 0 - 100%
				8			000 - 255	**Lime 1** 0 - 100%
				9			000 - 255	**Red 2** 0 - 100%
				10			000 - 255	**Green 2** 0 - 100%
				11			000 - 255	**Blue 2** 0 - 100%
				12			000 - 255	**Lime 2** 0 - 100%
				13			000 - 255	**Red 3** 0 - 100%
				14			000 - 255	**Green 3** 0 - 100%
				15			000 - 255	**Blue 3** 0 - 100%
				16			000 - 255	**Lime 3** 0 - 100%
				17			000 - 255	**Red 4** 0 - 100%
				18			000 - 255	**Green 4** 0 - 100%
				19			000 - 255	**Blue 4** 0 - 100%
				20			000 - 255	**Lime 4** 0 - 100%

DMX TRAITS

Features subject to change without notice								
MODE / CHANNELS							VALUES	FUNCTION
32 Ch	43 Ch	58 Ch-A	58 Ch-B	203 Ch	123 Ch	133 Ch		
				21			000 - 255	**Red 5**
								0 - 100%
				22			000 - 255	**Green 5**
								0 - 100%
				23			000 - 255	**Blue 5**
								0 - 100%
				24			000 - 255	**Lime 5**
								0 - 100%
				25			000 - 255	**Red 6**
								0 - 100%
				26			000 - 255	**Green 6**
								0 - 100%
				27			000 - 255	**Blue 6**
								0 - 100%
				28			000 - 255	**Lime 6**
								0 - 100%
				29			000 - 255	**Red 7**
								0 - 100%
				30			000 - 255	**Green 7**
								0 - 100%
				31			000 - 255	**Blue 7**
								0 - 100%
				32			000 - 255	**Lime 7**
								0 - 100%
				33			000 - 255	**Red 8**
								0 - 100%
				34			000 - 255	**Green 8**
								0 - 100%
				35			000 - 255	**Blue 8**
								0 - 100%
				36			000 - 255	**Lime 8**
								0 - 100%
				37			000 - 255	**Red 9**
								0 - 100%
				38			000 - 255	**Green 9**
								0 - 100%
				39			000 - 255	**Blue 9**
								0 - 100%
				40			000 - 255	**Lime 9**
								0 - 100%
				41			000 - 255	**Red 10**
								0 - 100%
				42			000 - 255	**Green 10**
								0 - 100%
				43			000 - 255	**Blue 10**
								0 - 100%
				44			000 - 255	**Lime 10**
								0 - 100%

DMX TRAITS

Features subject to change without notice								
MODE / CHANNELS							VALUES	FUNCTION
32 Ch	43 Ch	58 Ch-A	58 Ch-B	203 Ch	123 Ch	133 Ch		
				45			000 - 255	**Red 11**
								0 - 100%
				46			000 - 255	**Green 11**
								0 - 100%
				47			000 - 255	**Blue 11**
								0 - 100%
				48			000 - 255	**Lime 11**
								0 - 100%
				49			000 - 255	**Red 12**
								0 - 100%
				50			000 - 255	**Green 12**
								0 - 100%
				51			000 - 255	**Blue 12**
								0 - 100%
				52			000 - 255	**Lime 12**
								0 - 100%
				53			000 - 255	**Red 13**
								0 - 100%
				54			000 - 255	**Green 13**
								0 - 100%
				55			000 - 255	**Blue 13**
								0 - 100%
				56			000 - 255	**Lime 13**
								0 - 100%
				57			000 - 255	**Red 14**
								0 - 100%
				58			000 - 255	**Green 14**
								0 - 100%
				59			000 - 255	**Blue 14**
								0 - 100%
				60			000 - 255	**Lime 14**
								0 - 100%
				61			000 - 255	**Red 15**
								0 - 100%
				62			000 - 255	**Green 15**
								0 - 100%
				63			000 - 255	**Blue 15**
								0 - 100%
				64			000 - 255	**Lime 15**
								0 - 100%
				65			000 - 255	**Red 16**
								0 - 100%
				66			000 - 255	**Green 16**
								0 - 100%
				67			000 - 255	**Blue 16**
								0 - 100%
				68			000 - 255	**Lime 16**
								0 - 100%

DMX TRAITS

Features subject to change without notice								
MODE / CHANNELS							VALUES	FUNCTION
32 Ch	43 Ch	58 Ch-A	58 Ch-B	203 Ch	123 Ch	133 Ch		
				69			000 - 255	**Red 17**
								0 - 100%
				70			000 - 255	**Green 17**
								0 - 100%
				71			000 - 255	**Blue 17**
								0 - 100%
				72			000 - 255	**Lime 17**
								0 - 100%
				73			000 - 255	**Red 18**
								0 - 100%
				74			000 - 255	**Green 18**
								0 - 100%
				75			000 - 255	**Blue 18**
								0 - 100%
				76			000 - 255	**Lime 18**
								0 - 100%
				77			000 - 255	**Red 19**
								0 - 100%
				78			000 - 255	**Green 19**
								0 - 100%
				79			000 - 255	**Blue 19**
								0 - 100%
				80			000 - 255	**Lime 19**
								0 - 100%
			5				000 - 255	**Ring M2, Red 1**
								0 - 100%
			6				000 - 255	**Ring M2, Green 1**
								0 - 100%
			7				000 - 255	**Ring M2, Blue 1**
								0 - 100%
			8				000 - 255	**Ring M2, Lime 1**
								0 - 100%
			9				000 - 255	**Ring M2, Red 2**
								0 - 100%
			10				000 - 255	**Ring M2, Green 2**
								0 - 100%
			11				000 - 255	**Ring M2, Blue 2**
								0 - 100%
			12				000 - 255	**Ring M2, Lime 2**
								0 - 100%
			13				000 - 255	**Ring M2, Red 3**
								0 - 100%
			14				000 - 255	**Ring M2, Green 3**
								0 - 100%
			15				000 - 255	**Ring M2, Blue 3**
								0 - 100%
			16				000 - 255	**Ring M2, Lime 3**
								0 - 100%

DMX TRAITS

Features subject to change without notice								
MODE / CHANNELS							VALUES	FUNCTION
32 Ch	43 Ch	58 Ch-A	58 Ch-B	203 Ch	123 Ch	133 Ch		
		5					000 - 255	**Ring M1, Red 1**
							0 - 100%	
		6					000 - 255	**Ring M1, Green 1**
							0 - 100%	
		7					000 - 255	**Ring M1, Blue 1**
							0 - 100%	
		8					000 - 255	**Ring M1, Lime 1**
							0 - 100%	
		9					000 - 255	**Ring M1, Red 3**
							0 - 100%	
		10					000 - 255	**Ring M1, Green 3**
							0 - 100%	
		11					000 - 255	**Ring M1, Blue 3**
							0 - 100%	
		12					000 - 255	**Ring M1, Lime 3**
							0 - 100%	
		13					000 - 255	**Ring M1, Red 5**
							0 - 100%	
		14					000 - 255	**Ring M1, Green 5**
							0 - 100%	
		15					000 - 255	**Ring M1, Blue 5**
							0 - 100%	
		16					000 - 255	**Ring M1, Lime 5**
							0 - 100%	
					5	5	000 - 255	**Cyan**
							0 - 100%	
						6	000 - 255	**Cyan Fine**
							16-bit Fine Adjustment	
					6	7	000 - 255	**Magenta**
							0 - 100%	
						8	000 - 255	**Magenta Fine**
							16-bit Fine Adjustment	
					7	9	000 - 255	**Yellow**
							0 - 100%	
						10	000 - 255	**Yellow Fine**
							16-bit Fine Adjustment	
	9	17	17	81	8	11		**Color Temperature Linear**
							000 - 255	2,700K - 10,000K

DMX TRAITS

Features subject to change without notice								
MODE / CHANNELS							VALUES	FUNCTION
32 Ch	43 Ch	58 Ch-A	58 Ch-B	203 Ch	123 Ch	133 Ch		
7	10	18	18	82	9	12		**Color Temperature Presets**
							000	No Function
							001 - 060	2700K
							061 - 179	3000K
							180 - 201	3200K
							202 - 207	4000K
							208 - 229	4500K
							230 - 234	5000K
							235 - 239	5600K
							240 - 244	6500K
							245 - 249	8000K
							250 - 255	10000K
		19	19	83	10	13		**Color Temperature, Red to Green**
							000	No Function
							001 - 255	Shift Color Temperature, red to green
8	11	20	20	84	11	14		**Color Macros**
							000 - 255	See Color Macros Chart
	12	21	21	85	12	15		**Virtual Foreground Color Wheel**
							000	Open
							001 - 060	Virtual Swatch Colors (see Color Wheel Table)
							061 - 179	Open
							180 - 201	Color Scroll Clockwise, fast to slow
							202 - 207	Stop
							208 - 229	Color Scroll Counter-Clockwise, slow to fast
							230 - 234	Open
							235 - 239	Random Slots Fast
							240 - 244	Random Slots Medium
							245 - 249	Random Slots Slow
							250 - 255	Open
9	13	22	22	86	13	16		**Foreground Effect Macro**
							000	Open
							001 - 060	Macro 1
							061 - 179	Macro 2
							180 - 201	Macro 3
							202 - 207	Macro 4
							208 - 229	Macro 5
							230 - 234	Macro 6
							235 - 239	Macro 7
							240 - 244	Macro 8
							245 - 255	No Function
10	14	23	23	87	14	17		**Foreground Effect Macro Speed**
							000 - 255	Slow to fast
11	15	24	24	88	15	18		**Foreground Effect Macro Fade**
							000 - 255	Minimum to maximum

DMX TRAITS

Features subject to change without notice								
MODE / CHANNELS							VALUES	FUNCTION
32 Ch	43 Ch	58 Ch-A	58 Ch-B	203 Ch	123 Ch	133 Ch		
12	16	25	25	89	16	19		**Main RGBL Shutter**
							000 - 031	Shutter Closed (LEDs Off)
							032 - 063	Shutter Open (LEDs On)
							064 - 095	Strobe Effect, slow to fast
							096 - 127	Shutter Open (LEDs On)
							128 - 159	Pulse Effect in Sequences
							160 - 191	Shutter Open (LEDs On)
							192 - 223	Random Strobe Effect, slow to fast
							224 - 255	Shutter Open (LEDs On)
13	17	26	26	90	17	20		**Main RGBL Dimmer**
							000 - 255	0% to 100%
	18	27	27	91		21		**Main RGBL Dimmer Fine**
							000 - 255	Fine Adjustment 16-bit
14	19						000 - 255	**Background Red All**
								0 - 100%
15	20						000 - 255	**Background Green All**
								0 - 100%
16	21						000 - 255	**Background Blue All**
								0 - 100%
				92	18	22	000 - 255	**Background Red 1**
								0 - 100%
				93	19	23	000 - 255	**Background Green 1**
								0 - 100%
				94	20	24	000 - 255	**Background Blue 1**
								0 - 100%
				95	21	25	000 - 255	**Background Red 2**
								0 - 100%
				96	22	26	000 - 255	**Background Green 2**
								0 - 100%
				97	23	27	000 - 255	**Background Blue 2**
								0 - 100%
				98	24	28	000 - 255	**Background Red 3**
								0 - 100%
				99	25	29	000 - 255	**Background Green 3**
								0 - 100%
				100	26	30	000 - 255	**Background Blue 3**
								0 - 100%
				101	27	31	000 - 255	**Background Red 4**
								0 - 100%
				102	28	32	000 - 255	**Background Green 4**
								0 - 100%
				103	29	33	000 - 255	**Background Blue 4**
								0 - 100%
				104	30	34	000 - 255	**Background Red 5**
								0 - 100%
				105	31	35	000 - 255	**Background Green 5**
								0 - 100%
				106	32	36	000 - 255	**Background Blue 5**
								0 - 100%

DMX TRAITS

Features subject to change without notice								
MODE / CHANNELS							VALUES	FUNCTION
32 Ch	43 Ch	58 Ch-A	58 Ch-B	203 Ch	123 Ch	133 Ch		
				107	33	37	000 - 255	**Background Red 6**
								0 - 100%
				108	34	38	000 - 255	**Background Green 6**
								0 - 100%
				109	35	39	000 - 255	**Background Blue 6**
								0 - 100%
				110	36	40	000 - 255	**Background Red 7**
								0 - 100%
				111	37	41	000 - 255	**Background Green 7**
								0 - 100%
				112	38	42	000 - 255	**Background Blue 7**
								0 - 100%
				113	39	43	000 - 255	**Background Red 8**
								0 - 100%
				114	40	44	000 - 255	**Background Green 8**
								0 - 100%
				115	41	45	000 - 255	**Background Blue 8**
								0 - 100%
				116	42	46	000 - 255	**Background Red 9**
								0 - 100%
				117	43	47	000 - 255	**Background Green 9**
								0 - 100%
				118	44	48	000 - 255	**Background Blue 9**
								0 - 100%
				119	45	49	000 - 255	**Background Red 10**
								0 - 100%
				120	46	50	000 - 255	**Background Green 10**
								0 - 100%
				121	47	51	000 - 255	**Background Blue 10**
								0 - 100%
				122	48	52	000 - 255	**Background Red 11**
								0 - 100%
				123	49	53	000 - 255	**Background Green 11**
								0 - 100%
				124	50	54	000 - 255	**Background Blue 11**
								0 - 100%
				125	51	55	000 - 255	**Background Red 12**
								0 - 100%
				126	52	56	000 - 255	**Background Green 12**
								0 - 100%
				127	53	57	000 - 255	**Background Blue 12**
								0 - 100%
				128	54	58	000 - 255	**Background Red 13**
								0 - 100%
				129	55	59	000 - 255	**Background Green 13**
								0 - 100%
				130	56	60	000 - 255	**Background Blue 13**
								0 - 100%

DMX TRAITS

Features subject to change without notice								
MODE / CHANNELS							VALUES	FUNCTION
32 Ch	43 Ch	58 Ch-A	58 Ch-B	203 Ch	123 Ch	133 Ch		
				131	57	61	000 - 255	**Background Red 14**
							0 - 100%	
				132	58	62	000 - 255	**Background Green 14**
							0 - 100%	
				133	59	63	000 - 255	**Background Blue 14**
							0 - 100%	
				134	60	64	000 - 255	**Background Red 15**
							0 - 100%	
				135	61	65	000 - 255	**Background Green 15**
							0 - 100%	
				136	62	66	000 - 255	**Background Blue 15**
							0 - 100%	
				137	63	67	000 - 255	**Background Red 16**
							0 - 100%	
				138	64	68	000 - 255	**Background Green 16**
							0 - 100%	
				139	65	69	000 - 255	**Background Blue 16**
							0 - 100%	
				140	66	70	000 - 255	**Background Red 17**
							0 - 100%	
				141	67	71	000 - 255	**Background Green 17**
							0 - 100%	
				142	68	72	000 - 255	**Background Blue 17**
							0 - 100%	
				143	69	73	000 - 255	**Background Red 18**
							0 - 100%	
				144	70	74	000 - 255	**Background Green 18**
							0 - 100%	
				145	71	75	000 - 255	**Background Blue 18**
							0 - 100%	
				146	72	76	000 - 255	**Background Red 19**
							0 - 100%	
				147	73	77	000 - 255	**Background Green 19**
							0 - 100%	
				148	74	78	000 - 255	**Background Blue 19**
							0 - 100%	
				149	75	79	000 - 255	**Background Red 20**
							0 - 100%	
				150	76	80	000 - 255	**Background Green 20**
							0 - 100%	
				151	77	81	000 - 255	**Background Blue 20**
							0 - 100%	
				152	78	82	000 - 255	**Background Red 21**
							0 - 100%	
				153	79	83	000 - 255	**Background Green 21**
							0 - 100%	
				154	80	84	000 - 255	**Background Blue 21**
							0 - 100%	

DMX TRAITS

Features subject to change without notice								
MODE / CHANNELS							VALUES	FUNCTION
32 Ch	43 Ch	58 Ch-A	58 Ch-B	203 Ch	123 Ch	133 Ch		
				155	81	85	000 - 255	**Background Red 22**
								0 - 100%
				156	82	86	000 - 255	**Background Green 22**
								0 - 100%
				157	83	87	000 - 255	**Background Blue 22**
								0 - 100%
				158	84	88	000 - 255	**Background Red 23**
								0 - 100%
				159	85	89	000 - 255	**Background Green 23**
								0 - 100%
				160	86	90	000 - 255	**Background Blue 23**
								0 - 100%
				161	87	91	000 - 255	**Background Red 24**
								0 - 100%
				162	88	92	000 - 255	**Background Green 24**
								0 - 100%
				163	89	93	000 - 255	**Background Blue 24**
								0 - 100%
				164	90	94	000 - 255	**Background Red 25**
								0 - 100%
				165	91	95	000 - 255	**Background Green 25**
								0 - 100%
				166	92	96	000 - 255	**Background Blue 25**
								0 - 100%
				167	93	97	000 - 255	**Background Red 26**
								0 - 100%
				168	94	98	000 - 255	**Background Green 26**
								0 - 100%
				169	95	99	000 - 255	**Background Blue 26**
								0 - 100%
				170	96	100	000 - 255	**Background Red 27**
								0 - 100%
				171	97	101	000 - 255	**Background Green 27**
								0 - 100%
				172	98	102	000 - 255	**Background Blue 27**
								0 - 100%
				173	99	103	000 - 255	**Background Red 28**
								0 - 100%
				174	100	104	000 - 255	**Background Green 28**
								0 - 100%
				175	101	105	000 - 255	**Background Blue 28**
								0 - 100%
				176	102	106	000 - 255	**Background Red 29**
								0 - 100%
				177	103	107	000 - 255	**Background Green 29**
								0 - 100%
				178	104	108	000 - 255	**Background Blue 29**
								0 - 100%

DMX TRAITS

Features subject to change without notice								
MODE / CHANNELS							VALUES	FUNCTION
32 Ch	43 Ch	58 Ch-A	58 Ch-B	203 Ch	123 Ch	133 Ch		
				179	105	109	000 - 255	**Background Red 30**
							0 - 100%	
				180	106	110	000 - 255	**Background Green 30**
							0 - 100%	
				181	107	111	000 - 255	**Background Blue 30**
							0 - 100%	
			28				000 - 255	**Ring M2, Background Section 4 Red**
							0 - 100%	
			29				000 - 255	**Ring M2, Background Section 4 Green**
							0 - 100%	
			30				000 - 255	**Ring M2, Background Section 4 Blue**
							0 - 100%	
			31				000 - 255	**Ring M2, Background Section 5 Red**
							0 - 100%	
			32				000 - 255	**Ring M2, Background Section 5 Green**
							0 - 100%	
			33				000 - 255	**Ring M2, Background Section 5 Blue**
							0 - 100%	
			34				000 - 255	**Ring M2, Background Section 6 Red**
							0 - 100%	
			35				000 - 255	**Ring M2, Background Section 6 Green**
							0 - 100%	
			36				000 - 255	**Ring M2, Background Section 6 Blue**
							0 - 100%	
		28					000 - 255	**Ring M1, Background Section 2 Red**
							0 - 100%	
		29					000 - 255	**Ring M1, Background Section 2 Green**
							0 - 100%	
		30					000 - 255	**Ring M1, Background Section 2 Blue**
							0 - 100%	
		31					000 - 255	**Ring M1, Background Section 4 Red**
							0 - 100%	
		32					000 - 255	**Ring M1, Background Section 4 Green**
							0 - 100%	
		33					000 - 255	**Ring M1, Background Section 4 Blue**
							0 - 100%	
		34					000 - 255	**Ring M1, Background Section 6 Red**
							0 - 100%	
		35					000 - 255	**Ring M1, Background Section 6 Green**
							0 - 100%	
		36					000 - 255	**Ring M1, Background Section 6 Blue**
							0 - 100%	

DMX TRAITS

Features subject to change without notice								
MODE / CHANNELS							VALUES	FUNCTION
32 Ch	43 Ch	58 Ch-A	58 Ch-B	203 Ch	123 Ch	133 Ch		
								Virtual Background Color Wheel
							000	Open
							001 - 060	Virtual Swatch Colors (see Color Wheel Table)
							061 - 179	Open
							180 - 201	Color Scroll Clockwise, fast to slow
	22	37	37	182	108	112	202 - 207	Stop
							208 - 229	Color Scroll Counter-Clockwise, slow to fast
							230 - 234	Open
							235 - 239	Random Slots Fast
							240 - 244	Random Slots Medium
							245 - 249	Random Slots Slow
							250 - 255	Open
								Background Effect Macro
							000	Open
							001 - 060	Macro 1
							061 - 179	Macro 2
							180 - 201	Macro 3
17	23	38	38	183	109	113	202 - 207	Macro 4
							208 - 229	Macro 5
							230 - 234	Macro 6
							235 - 239	Macro 7
							240 - 244	Macro 8
							245 - 255	No Function
18	24	39	39	184	110	114		**Background Effect Macro Speed**
							000 - 255	Slow to fast
19	25	40	40	185	111	115		**Background Effect Macro Fade**
							000 - 255	Minimum to maximum
								Background RGB Shutter
							000 - 031	Shutter Closed (LEDs Off)
							032 - 063	Shutter Open (LEDs On)
							064 - 095	Strobe Effect, slow to fast
20	26	41	41	186	112	116	096 - 127	Shutter Open (LEDs On)
							128 - 159	Pulse Effect in Sequences
							160 - 191	Shutter Open (LEDs On)
							192 - 223	Random Strobe Effect, slow to fast
							224 - 255	Shutter Open (LEDs On)
21	27	42	42	187	113	117		**Background RGB Dimmer**
							000 - 255	0% - 100%
	28	43	43	188		118		**Background RGB Dimmer Fine**
							000 - 255	Fine Adjustment 16-bit
22	29	44	44	189	114	119	000 - 255	**RGB Ring Red**
								0 - 100%
23	30	45	45	190	115	120	000 - 255	**RGB Ring Blue**
								0 - 100%
24	31	46	46	191	116	121	000 - 255	**RGB Ring Green**
								0 - 100%

DMX TRAITS

Features subject to change without notice								
MODE / CHANNELS							VALUES	FUNCTION
32 Ch	43 Ch	58 Ch-A	58 Ch-B	203 Ch	123 Ch	133 Ch		
25	32	47	47	192	117	122		**RGB Ring Shutter**
							000 - 031	Shutter Closed (LEDs Off)
							032 - 063	Shutter Open (LEDs On)
							064 - 095	Strobe Effect, slow to fast
							096 - 127	Shutter Open (LEDs On)
							128 - 159	Pulse Effect in Sequences
							160 - 191	Shutter Open (LEDs On)
							192 - 223	Random Strobe Effect, slow to fast
							224 - 255	Shutter Open (LEDs On)
26	33	48	48	193	118	123		**RGB Ring Dimmer**
							000 - 255	0 - 100%
	34	49	49	194		124		**RGB Ring Dimmer Fine**
							000 - 255	Fine Adjustment 16-bit
27	35	50	50	195	119	125		**Zoom**
							000 - 255	Zoom Adjustment, wide to narrow
	36	51	51	196		126		**Zoom Fine**
							000 - 255	16-Bit Fine Adjustment
	37	52	52	197	120	127		**Dim Modes**
							000 - 020	Default to Unit Setting
							021 - 040	Standard
							041 - 060	Stage
							061 - 080	TV
							081 - 100	Architectural
							101 - 120	Theatre
							121 - 140	Stage 2
								Dimming Speed
							141	0.1 s
							142	0.2 s
							143	0.3 s
							144	0.4 s
							145	0.5 s
							146	0.6 s
							147	0.7 s
							148	0.8 s
							149	0.9 s
							150	1.0 s
							151	1.5 s
							152	2.0 s
							153	3.0 s
							154	4.0 s
							155	5.0 s
							156	6.0 s
							157	7.0 s
							158	8.0 s
							159	9.0 s
							160	10.0 s
							161 - 255	Default to Unit Setting

DMX TRAITS

Features subject to change without notice								
MODE / CHANNELS							VALUES	FUNCTION
32 Ch	43 Ch	58 Ch-A	58 Ch-B	203 Ch	123 Ch	133 Ch		
								Dim Curves
							000 - 020	No Function
							021 - 040	Linear
	38	53	53	198	121	128	041 - 060	Square
							061 - 080	Inv Squa
							081 - 100	S Curve
							101 - 255	No Function
								Internal Programs
							000 - 009	No Function
							010 - 019	Program 1
							020 - 029	Program 2
							030 - 039	Program 3
							040 - 049	Program 4
							050 - 059	Program 5
							060 - 069	Program 6
							070 - 079	Program 7
							080 - 089	Program 8
							090 - 099	Program 9
28	39	54	54	199		129	100 - 109	Program 10
							110 - 119	Program 11
							120 - 129	Program 12
							130 - 139	Program 13
							140 - 149	Program 14
							150 - 159	Program 15
							160 - 169	Program 16
							170 - 179	Program 17
							180 - 189	Program 18
							190 - 199	Program 19
							200 - 209	Program 20
							210 - 255	No Function
29	40	55	55	200		130		**Program Speed**
							000 - 255	Slow to fast
30	41	56	56	201		131		**Program Fade**
							000 - 255	Minimum to maximum
31	42	57	57	202	122	132		**Pan / Tilt Speed**
							000 - 255	Maximum to minumum
								Special Function
							000 - 010	No function (default LED refresh rate = 1200 Hz)
							011	900 Hz
							012	910 Hz
							013	920 Hz
							014	930 Hz
32	43	58	58	203	123	133	015	940 Hz
							016	950 Hz
							017	960 Hz
							018	970 Hz
							019	980 Hz
							020	990 Hz
							021	1000 Hz

DMX TRAITS

Features subject to change without notice								
MODE / CHANNELS							VALUES	FUNCTION
32 Ch	43 Ch	58 Ch-A	58 Ch-B	203 Ch	123 Ch	133 Ch		
								Special Function (continued)
							022	1010 Hz
							023	1020 Hz
							024	1030 Hz
							025	1040 Hz
							026	1050 Hz
							027	1060 Hz
							028	1070 Hz
							029	1080 Hz
							030	1090 Hz
							031	1100 Hz
							032	1110 Hz
							033	1120 Hz
							034	1130 Hz
							035	1140 Hz
							036	1150 Hz
							037	1160 Hz
							038	1170 Hz
							039	1180 Hz
							040	1190 Hz
							041	1200 Hz
							042	1210 Hz
							043	1220 Hz
							044	1230 Hz
32	43	58	58	203	123	133	045	1240 Hz
							046	1250 Hz
							047	1260 Hz
							048	1270 Hz
							049	1280 Hz
							050	1290 Hz
							051	1300 Hz
							052	1310 Hz
							053	1320 Hz
							054	1330 Hz
							055	1340 Hz
							056	1350 Hz
							057	1360 Hz
							058	1370 Hz
							059	1380 Hz
							060	1390 Hz
							061	1400 Hz
							062	1410 Hz
							063	1420 Hz
							064	1430 Hz
							065	1440 Hz
							066	1450 Hz
							067	1460 Hz
							068	1470 Hz
							069	1480 Hz

DMX TRAITS

Features subject to change without notice								
MODE / CHANNELS							VALUES	FUNCTION
32 Ch	43 Ch	58 Ch-A	58 Ch-B	203 Ch	123 Ch	133 Ch		
								Special Functions (continued)
							070	1490 Hz
							071	1500 Hz
							072	2500 Hz
							073	4000 Hz
							074	5000 Hz
							075	6000 Hz
							076	10 KHz
							077	15 KHz
							078	20 KHz
							079	25 KHz
							080 - 089	Enable Blackout While Pan/Tilt Moving
							090 - 099	Disable Blackout While Pan/Tilt Moving
							100 - 105	Fan Mode Auto (hold 3 s)
							106 - 111	Fan Mode High (hold 3 s)
							112 - 117	Fan Mode Low (hold 3 s)
32	43	58	58	203	123	133	118 - 122	Fan Mode Mute (Hold 3 s)
							123 - 127	Enable Pan Invert (hold 3 s)
							128 - 132	Disable Pan Invert (hold 3 s)
							133 - 139	Enable Tilt Invert (hold 3 s)
							140 - 149	Disable Tilt Invert (hold 3 s)
							150 - 159	Reset All
							160 - 169	Reset Pan/Tilt
							170 - 174	Reset Effect
							175 - 179	Enable Zoom Speed Fast
							180 - 182	Disable Zoom Speed Fast
							183 - 185	Enable White Calibration (hold 3 s)
							186 - 189	Enable White Fixed Values (hold 3 s)
							190 - 193	Enable Limited Zoom Mode (hold 3 s)
							194 - 197	Disable Limited Zoom Mode (hold 3 s)
							198 - 201	Enable Hibernation 15minutes (holds 3 s)
							202 - 205	Disable Hibernation (hold 3 s)
							206 - 255	No Function

PIXEL ZONES

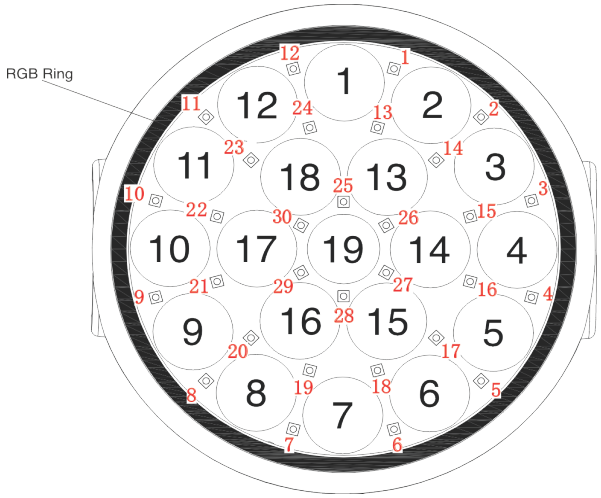

203Ch Mode

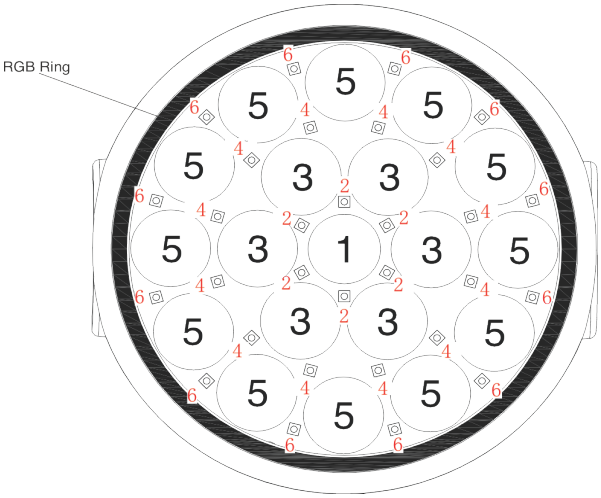

58Ch Mode - Ring M1

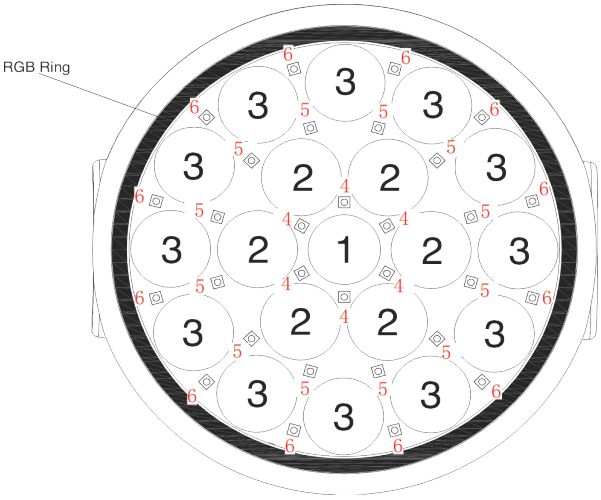

58Ch Mode - Ring M2

COLOR WHEEL TABLE

Value	Filter Number	Name	Value	Filter Number	Name
1	7	Pale Yellow	31	126	Mauve
2	103	Straw	32	49	Medium Purple
3	151	Gold Tint	33	58	Lavender
4	100	Spring Yellow	34	199	Palace Blue
5	10	Medium Yellow	35	119	Dark Blue
6	101	Yellow	36	132	Medium Blue
7	104	Deep Amber	37	120	Deep Blue
8	15	Deep Straw	38	165	Daylight Blue
9	179	Loving Amber	39	161	Slate Blue
10	21	Gold Amber	40	118	Light Blue
11	105	Orange	41	68	Sky Blue
12	158	Deep Orange	42	143	Pale Navy Blue
13	22	Dark Amber	43	131	Marine Blue
14	778	Millenium Gold	44	115	Peacock Blue
15	135	Deep Golden Amber	45	172	Lagoon Blue
16	24	Scarlet	46	116	Medium Blue Green
17	106	Primary Red	47	90	Dark Yellow Green
18	26	Bright Red	48	139	Primary Green
19	27	Medium Red	49	122	Fern Green
20	19	Fire	50	89	Moss Green
21	157	Pink	51	124	Dark Green
22	36	Medium Pink	52	88	Lime Green
23	111	Dark Pink	53	138	Pale Green
24	128	Bright Pink	54	203	Quarter CT Blue
25	148	Bright Rose	55	202	Half CT Blue
26	332	Special Rose Pink	56	201	Full CT Blue
27	793	Vanity Fair	57	200	Double CT Blue
28	113	Magenta	58	206	Quarter CT Orange
29	46	Dark Magenta	59	205	Half CT Orange
30	48	Rose Purple	60	204	Full CT Orange

COLOR MACROS TABLE

MACRO	DMX VALUES	RED	GREEN	BLUE	LIME
Off	000	0	0	0	0
1	001 - 004	80	255	234	80
2	005 - 008	80	255	164	80
3	009 - 012	77	255	112	77
4	013 - 016	117	255	83	83
5	017 - 020	160	255	77	77
6	021 - 024	223	255	83	83
7	025 - 028	255	243	77	77
8	029 - 032	255	200	74	74
9	033 - 036	255	166	77	77
10	037 - 040	255	125	74	74
11	041 - 044	255	97	77	74
12	045 - 048	255	71	77	71
13	049 - 052	255	83	134	83
14	053 - 056	255	93	182	93
15	057 - 060	255	96	236	96
16	061 - 064	238	93	255	93
17	065 - 068	196	87	255	87
18	069 - 072	150	90	255	90
19	973 - 076	100	77	255	77
20	077 - 080	77	100	255	77
21	081 - 084	67	148	255	67
22	085 - 088	77	195	255	77
23	089 - 092	77	234	255	77
24	093 - 096	158	255	144	144
25	097 - 100	255	251	153	153
26	101 - 104	255	175	147	147
27	105 - 108	255	138	186	138
28	109 - 112	255	147	251	147
29	113 - 116	151	138	255	138
30	117 - 120	99	0	255	100
31	121 - 124	138	169	255	138
32	125 - 128	255	255	255	255
33	129 - 132	255	206	143	0
34	133 - 136	254	177	153	0
35	137 - 140	254	192	138	0
36	141 - 144	254	165	98	0
37	145 - 148	254	121	0	0
38	149 - 152	176	17	0	0
39	153 - 156	96	0	11	0
40	157 - 160	234	139	171	0
41	161 - 164	224	5	97	0
42	165 - 168	175	77	173	0

COLOR MACROS TABLE

MACRO	DMX VALUES	RED	GREEN	BLUE	AMBER
43	169 - 172	119	130	199	0
44	173 - 176	147	164	212	0
45	177 - 180	88	2	163	0
46	181 - 184	0	38	86	0
47	185 - 188	0	142	208	0
48	189 - 192	52	148	209	0
49	193 - 196	1	134	201	0
50	197 - 200	0	145	212	0
51	201 - 204	0	121	192	0
52	205 - 208	0	129	184	0
53	209 - 212	0	83	115	0
54	213 - 216	0	97	166	0
55	217 - 220	1	100	167	0
56	221 - 224	0	40	86	0
57	225 - 228	209	219	182	0
58	229 - 232	42	165	85	0
59	233 - 236	0	46	35	0
60	237 - 240	8	107	222	0
61	241 - 244	255	0	0	0
62	245 - 248	0	255	0	0
63	249 - 252	0	0	255	0
64	253 - 255	0	0	0	255

COLOR TEMPERATURE TABLE

Colors shown are an approximate representation. https://www.luxalight.eu/en/cie-convertor

DMX VALUE	COLOR TEMPERATURE (K)	DMX VALUE	COLOR TEMPERATURE (K)
27	2700	64	6400
28	2800	65	6500
29	2900	66	6600
30	3000	67	6700
31	3100	68	6800
32	3200	69	6900
33	3300	70	7000
34	3400	71	7100
35	3500	72	7200
36	3600	73	7300
37	3700	74	7400
38	3800	75	7500
39	3900	76	7600
40	4000	77	7700
41	4100	78	7800
42	4200	79	7900
43	4300	80	8000
44	4400	81	8100
45	4500	82	8200
46	4600	83	8300
47	4700	84	8400
48	4800	85	8500
49	4900	86	8600
50	5000	87	8700
51	5100	88	8800
52	5200	89	8900
53	5300	90	9000
54	5400	91	9100
55	5500	92	9200
56	5600	93	9300
57	5700	94	9400
58	5800	95	9500
59	5900	96	9600
60	6000	97	9700
61	6100	98	9800
62	6200	99	9900
63	6300	100	10000

DIM MODES AND CURVES

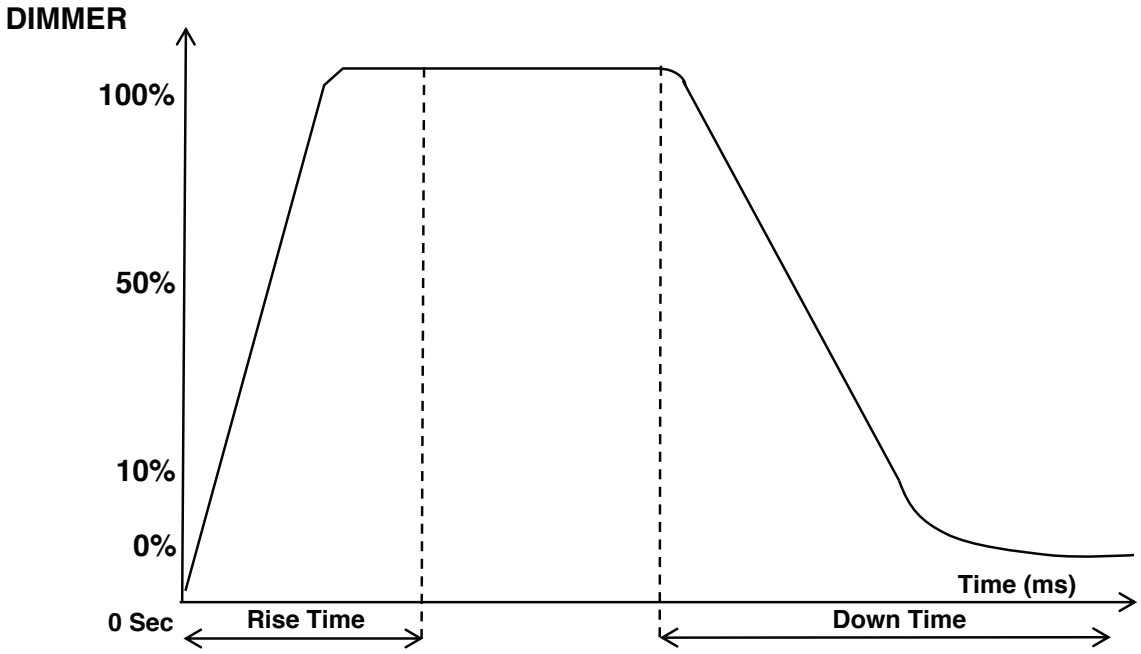

Dimming Curve Ramp Effect	0 sec Fade Time 255 0		1 sec Fade Time 255 0	
	Rise Time (ms)	Down Time (ms)	Rise Time (ms)	Down Time (ms)
Standard (default)	0	0	0	0
Stage	780	1100	1540	1660
TV	1180	1520	1860	1940
Architectural	1380	1730	2040	2120
Theatre	1580	1940	2230	2280
Stage 2	0	1100	0	1660

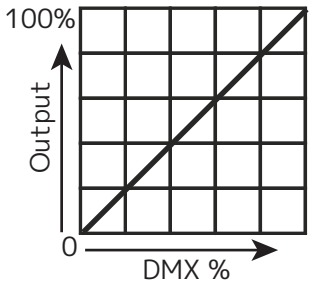

LINEAR

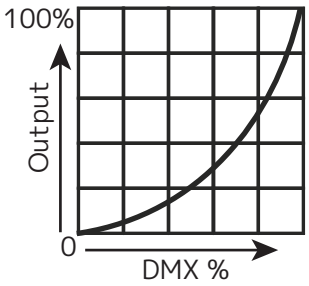

SQUARE

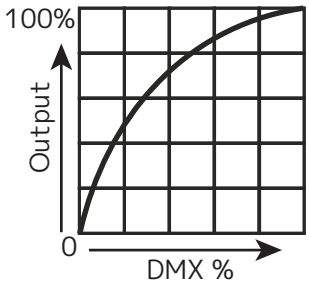

INVERSE SQUARE

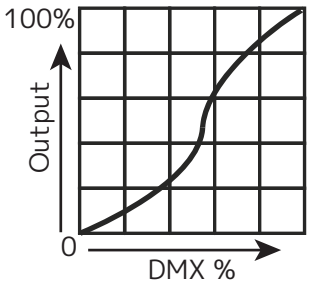

S-CURVE

PRIMARY-SECONDARY SET UP

This function allows you to link units together to run in a Primary-Secondary set-up, in which one unit will act as the controlling unit and the others will react to the controlling unit's built-in programs. Any unit can be configured to act as a Primary or as a Secondary, but only one unit in a given system can be programmed to act as the Primary.

Primary-Secondary Connections and Settings:

1. Daisy chain your units via the XLR connectors on the rear panels of each unit. Use standard XLR data cables to link your units together. Remember that the male XLR connector is the input and the female XLR connector is the ouput. The first unit in the chain (primary) will use the female XLR connector only. The last unit in the chain will use the male XLR connector only.
2. Use the display screen and control panel to navigate to Personality > Prim/Sec Mode. Select this sub-menu using the ENTER button, and use the UP and DOWN buttons to toggle between "Primary" and "Secondary". Press ENTER to confirm your selection.
3. Repeat Step 2 for each unit in the system. Make sure that only one unit is designated as the Primary, while all other units are designated as Secondaries.
4. The secondary units will now follow the behavior of the primary unit.

NOTES:

- Only one unit should be configured as the primary, while all the other units should be configured as secondaries.
- All units should be set to the same DMX channel mode.
- If fixtures fail to sync, verify that all settings mentioned above are the same, then power all devices off, then switch them on again to re-establish the link.

MULTI UNIT POWER LINKING

This features allows you to connect the fixtures to one another using the power cable input and output sockets.

The maximum number of units that can be linked in this manner is as follows:

- **3 units when running on 230V power.**
- **DO NOT POWER LINK UNITS WHEN RUNNING ON 120V POWER!**

DO NOT EXCEED THIS MAXIMUM NUMBER WHEN POWER LINKING UNITS!

All linked units must be of the same make and model type. Do not mix and match units!

MAINTENANCE GUIDELINES



DISCONNECT POWER BEFORE PERFORMING ANY MAINTENANCE!

CLEANING

Frequent cleaning is recommended to ensure proper function, optimized light output, and an extended life. The frequency of cleaning depends on the environment in which the fixture operates: damp, smoky, or particularly dirty environments can cause greater accumulation of dirt on the fixture's optics. Clean the external lens surface regularly with a soft cloth to avoid dirt/debris accumulation.

NEVER use alcohol, solvents, or ammonia-based cleaners.

MAINTENANCE

Regular inspections are recommended to ensure proper function and extended life. There are no user serviceable parts inside this fixture. Please refer all other service issues to an authorized ADJ service technician. Should you need any spare parts, please order genuine parts from your local ADJ dealer.

Please refer to the following points during routine inspections:

A. A detailed electrical check by an approved electrical engineer every three months, to make sure the circuit contacts are in good condition and prevent overheating.
B. Be sure all screws and fasteners are securely tightened at all times. Loose screws may fall out during normal operation, resulting in damage or injury as larger parts could fall.
C. Check for any deformations on the housing, color lenses, rigging hardware, and rigging points (ceiling, suspension, trussing). Deformations in the housing could allow for dust to enter into the fixture. Damaged rigging points or unsecured rigging could cause the fixture to fall and seriously injure a person(s).
D. Electric power supply cables must not show any damage, material fatigue, or sediments.

NEVER remove the ground prong from the power cable.

Please do not discard the shipping carton in the trash. Please recycle whenever possible.

ERROR CODES

ERROR GROUP	ERROR CODE	DESCRIPTION
Encoder Error	Pan Encoder Error	Encoder Error: Pan
	Tilt Encoder Error	Encoder Error: Tilt
Sensor Error	Pan Sensor Error	Sensor Error: Pan
	Tilt Sensor Error	Sensor Error: Tilt
	Zoom Sensor Error	Sensor Error: Zoom
Communication Error	CPU-B Error	Lost Connection: Pan/Tilt
	CPU-C Error	Lost Connection: Effects
Net Error	Net Communication Error	Net Communication
	Net Protocol Error	Net Protocol
	Net Model Mismatch Error	Net Model Mismatch
Temp Error	Temp High Error	Temp High
	Temp Sensitive Error	Temp Sensitive
EEPROM Error	EEPROM Error	EEPROM Error

ORDERING INFORMATION

SKU (US)	SKU (EU)	DESCRIPTION
VIZ290	1237000363	ADJ Vizi Pix Z19

DIMENSIONAL DRAWINGS

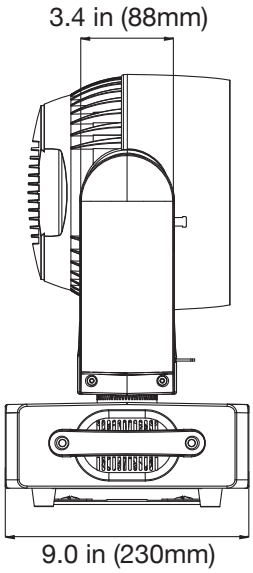

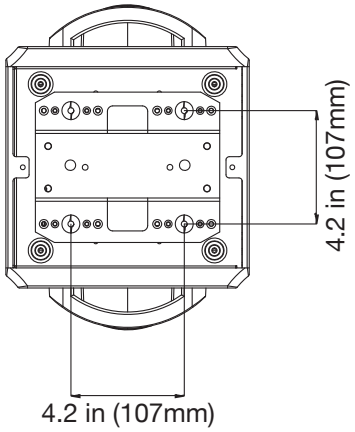

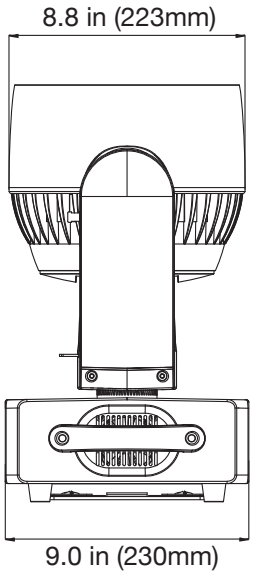

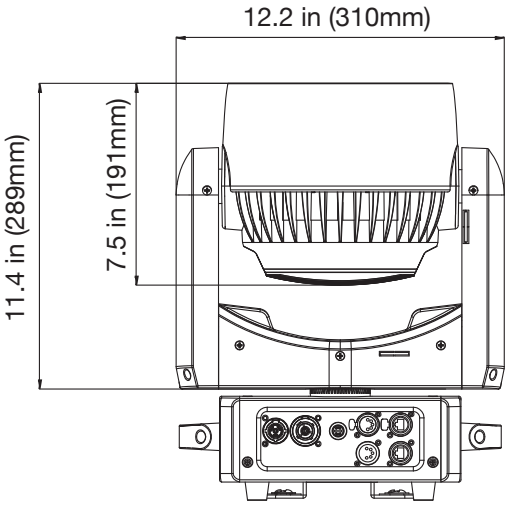

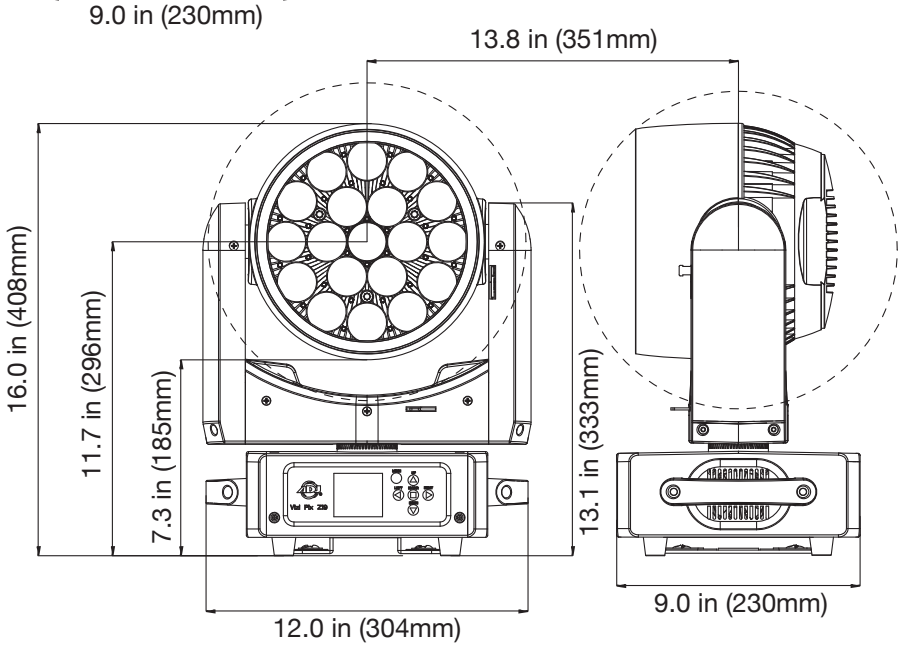

SPECIFICATIONS

Optical (Foreground LEDs):
- 19x 30W RGBL (4-IN-1) LEDs
- 30,000 Hour Average LED Life
- CRI: 86
- 15,000 Lux (Zoomed In to 7° @ 5 meters)
- 7° to 42° Beam Angle
- 9° to 60° Field Angle

Optical (Background LEDs):
- 30x 0.5W SMD RGB LEDs
- 50,000 Hour Average LED Life

Optical (Ring LEDs):
- 40x 0.5W SMD RGB LEDs
- 50,000 Hour Average LED Life

Features:
- Moving Light Pixel Wash with Effects
- Individual Pixel Control (Foreground & Background LEDs)
- RGB LED Ring
- Built-In Pixel Effect Programs
- Aria X2 Wireless Management System
- Electronic Strobe / Dimmer
- Pan/Tilt: 630/540 x 270
- Motorized Zoom
- Color Calibrated Pixels so units match from batch to batch
- Virtual CMY DMX Control Modes
- Virtual Foreground and Background Color Wheel Control
- Selectable LED Refresh Rates (900 Hz~25K Hz)
- Selectable Dim Modes: Standard, Stage, TV, Arch., Theatre, Stage 2 and user settable Dim Speed (0.1S~10S)
- 4 Dim Curves: Square, Linear, Inv. Square and S. Curve
- 0-100% smooth dimming
- Fan Cooled

Colors:
- 19x RGBL LEDs (Red, Green, Blue and Lime)
- 70x RGB LEDs (Red, Green and Blue)
- Virtual CMY DMX Control Modes
- Virtual Foreground and Background Color Wheel Control
- Built-In Color Macros
- 2,700K ~ 10,000K Linear White Color Temperature Control
- Color Temperature Presets: 2,700, 3,000, 3,200, 4,000, 4,500, 5,000, 5,600, 6,500, 8,000 and 10,000K

Effects:
- 19x 30W RGBL (4-IN-1) Foreground LEDs, Fully pixel mappable
- 30x 0.5W RGB Background LEDs, Fully pixel mappable
- 40x 0.5W RGB Ring LEDs, three channel control
- Variable Strobe & Pulse effects (0.5Hz to 33Hz)
- Motorized Zoom (7° to 42°)

Connections:
- Seetronic, IP65 locking power In & Thru Connections
- Seetronic, IP20 5-pin In & Out DMX Connections
- 2x IP20, RJ45 network ports

Control:
- Aria X2 Wireless Management System
- DMX-512
- RDM (Remote Device Management)
- Artnet
- sACN
- 7 DMX Control Modes: 32 / 43 / M1 58 / M2 58 / 203 / 123 & 133 channels
- Built-In Effect Pixel Programs with Speed and Fade Control
- With Wired Digital Communication Network

Pan/Tilt:
- Pan: 630 or 540 degrees
- Tilt: 270 degrees
- 16-Bit Fine Pan & Tilt
- Pan & Tilt Locks

Electrical:
- Multi-voltage operation: 100-230V, 50/60Hz
- Max power consumption: 730W (6.64Amps) @ 120V. 690W (3.04Amps) @ 230V.

Dimensions & Weight:
- Dimensions (LxWxH): 12.0” x 9.0” x 16.0” (304mm x 230mm x 408mm)
- Center-to-Center Spacing: 13.8” (351mm)
- Weight: 11.9lbs (5.4kg)

Approvals / Rating:
- cETLus (Control # 5028947)
- CE Certified
- IP20

Please Note: Specifications and improvements in the design of this unit and this manual are subject to change without any prior written notice.

FCC STATEMENT

This device complies with Part 15 of the FCC Rules. Operation is subject to the following two conditions: (1) this device may not cause harmful interference, and (2) this device must accept any interference received, including interference that may cause undesired operation.

FCC RADIO FREQUENCY INTERFERENCE WARNINGS & INSTRUCTIONS

This product has been tested and found to comply with the limits as per Part 15 of the FCC Rules. These limits are designed to provide reasonable protection against harmful interference in a residential installation. This device uses and can radiate radio frequency energy and, if not installed and used in accordance with the included instructions, may cause harmful interference to radio communications. However, there is no guarantee that interference will not occur in a particular installation. If this device does cause harmful interference to radio or television reception, which can be deter- mined by turning the device off and on, the user is encouraged to try to correct the interference by one or more of the following methods:

- Reorient or relocate the device.
- Increase the separation between the device and the receiver.
- Connect the device to an electrical outlet on a circuit different from which the radio receiver is connected.
- Consult the dealer or an experienced radio/TV technician for help.

Energy Saving Matters (EuP 2009/125/EC)

Saving electric energy is a key to help protecting the environment. Please turn off all electrical products when they are not in use. To avoid power consumption in idle mode, disconnect all electrical equipment from power when not in use. Thank you!