FACECAM 4K

Quick Start Guide

Installation

1.

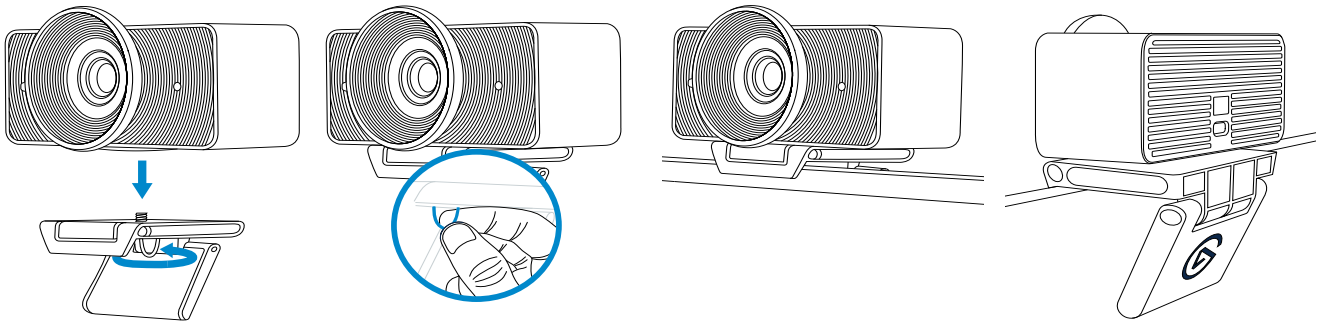

Align the thread underneath Facecam 4K with the monitor mount's screw, then turn the D-ring below to tighten and secure.

2.

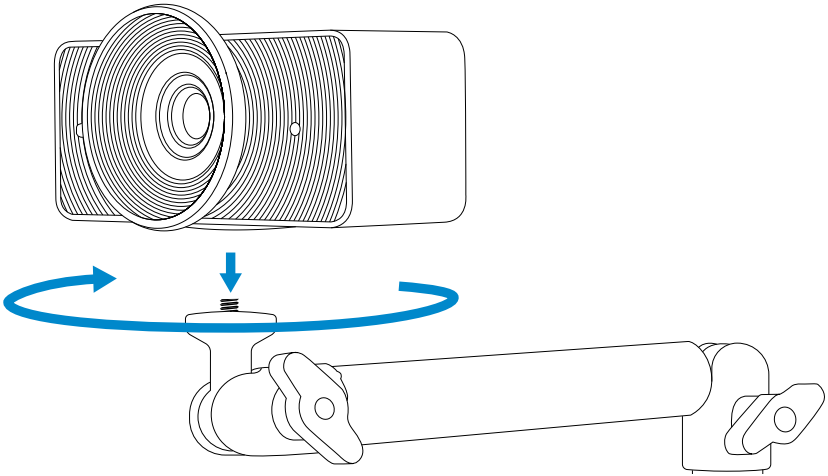

Alternatively, screw Facecam 4K onto a desk stand, tripod, or other mount using its 1/4-inch thread.

3.

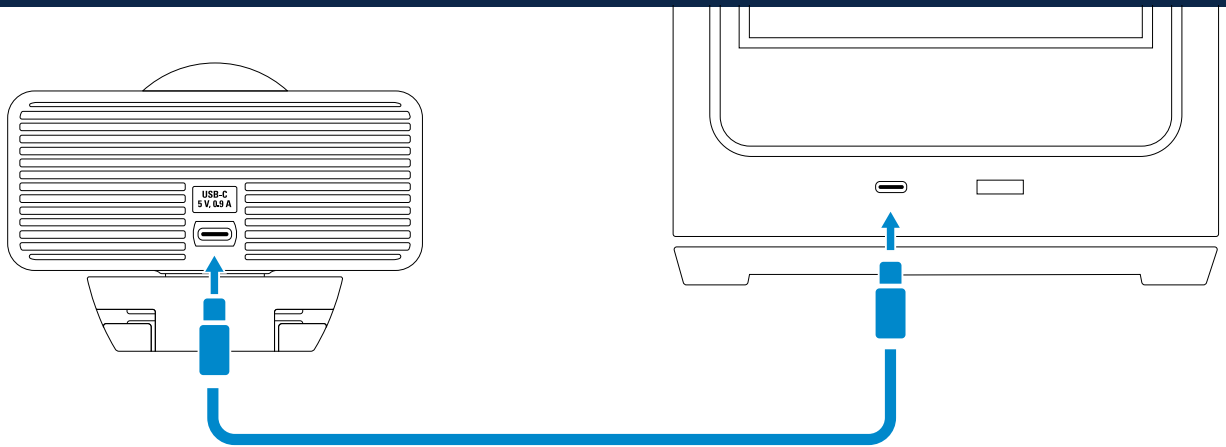

For best performance, connect Facecam 4K to a USB 3.0 (or later) port on your computer — not a USB hub—using a USB 3.0 (or later) cable, like the one in your box.

Facecam 4K can connect via USB 2.0, but video is limited to 1080p and uses MJPG compression.

4.

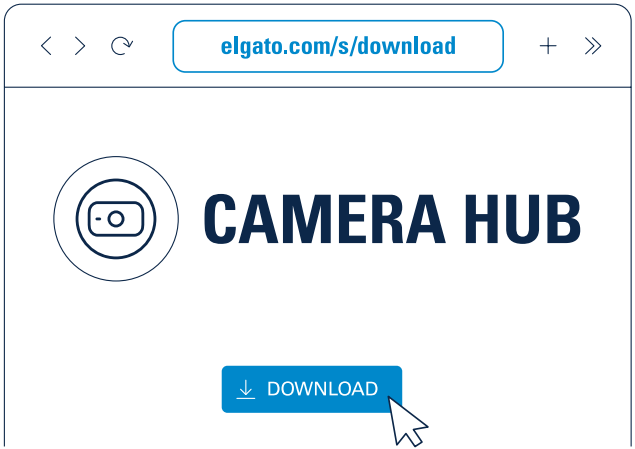

Download the free Camera Hub app for PC or Mac to get the most out of Facecam 4K.
Its DSLR-style controls and cinematic effects give you powerful options to fine-tune your image

5.

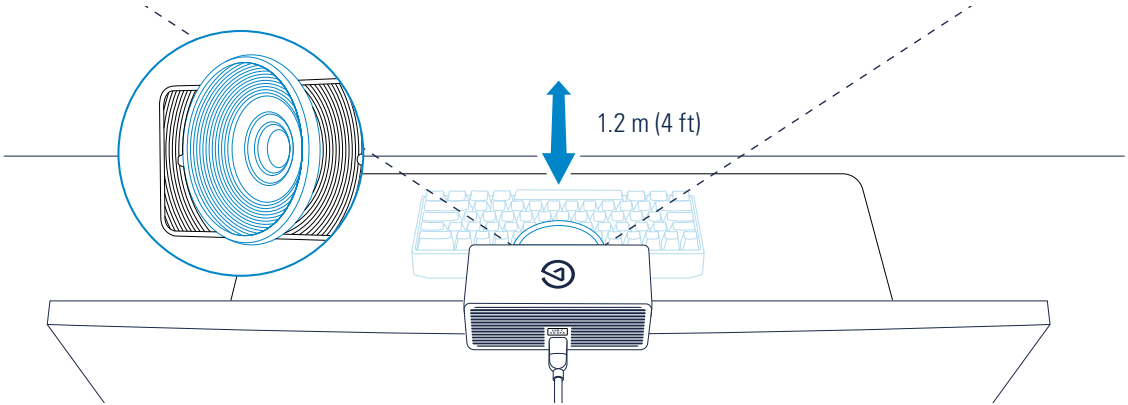

With a fixed-focus lens optimized for desk use, Facecam 4K keeps you perfectly sharp at all times with zero focus-hunting. For best performance, avoid moving outside of its optimized range—from your keyboard up to 1.2 m (4 ft) away.

6.

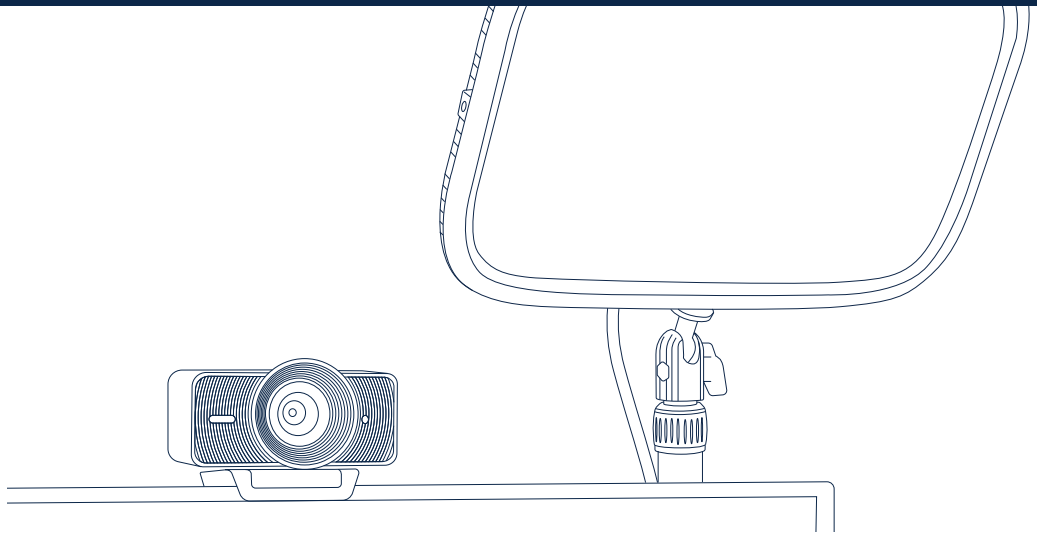

Facecam 4K works best in professional setups with good lighting.
Avoid dim or poorly-lit spaces, where possible.

7.

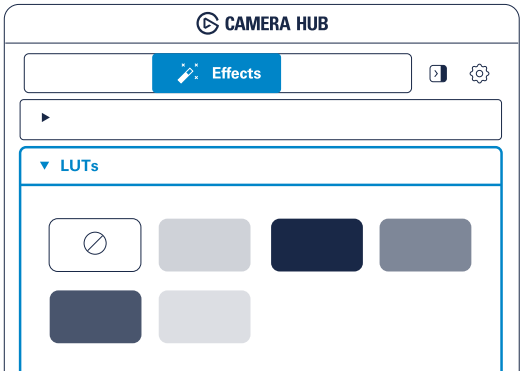

Color grade with cinematic LUTs directly in the Camera Hub app. Choose from a selection of preset looks, or explore additional LUT styles on Elgato Marketplace.

8.

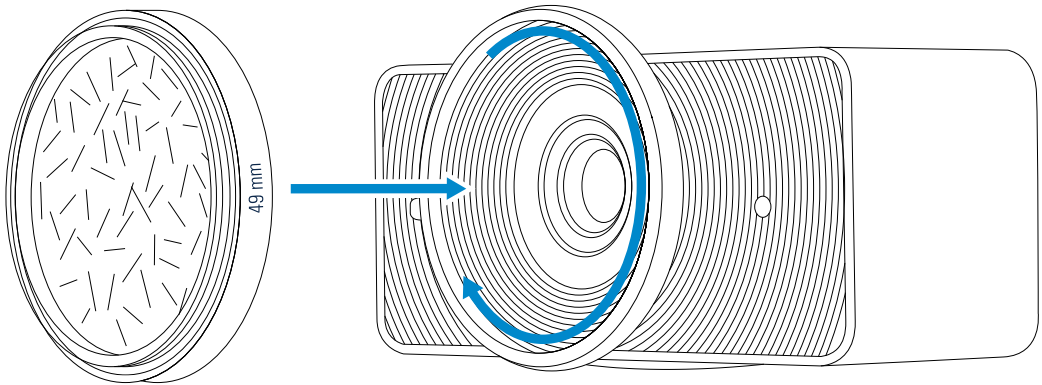

To attach a 49-mm filter, align the threads and gently screw onto Facecam 4K's lens cone.

9.

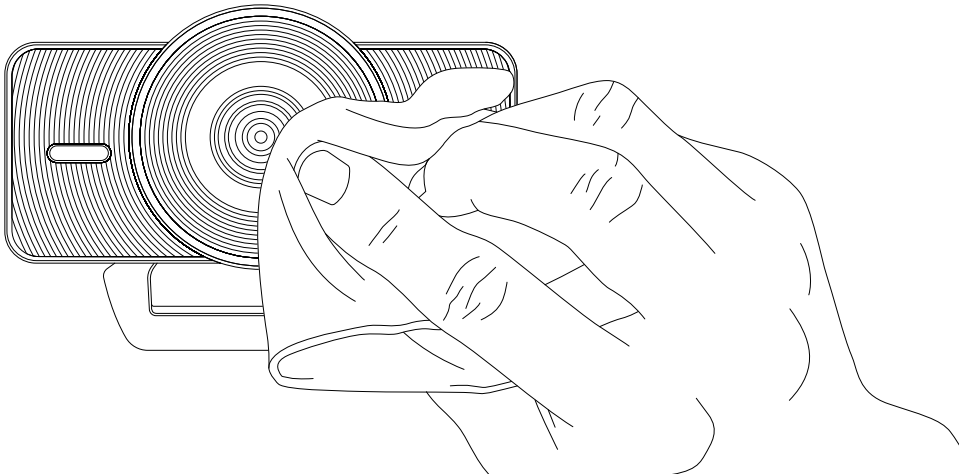

To clean your lens, use a microfiber cloth—not paper towels or detergents.

Enjoy

10.

Works with



or anywhere else you can use a webcam.

Tech specs

Image Sensor:	SONY® STARVIS 2 CMOS sensor 1/1.8“
Optics:	Elgato Prime Lens
Aperture:	f/4.0
Focus Type:	Fixed
Focal Length:	21 mm
Focus Range:	30 – 120 cm | 11.8 – 47.2 in (at 4K resolution)
Field of View:	90°
Video Encoding:	YUY2, NV12, MJPG (when connected by USB 3.0, otherwise MJPEG only)
Video resolutions: (USB 3.0)	2160p60 (MJPG only), 2160p30 (NV12/MJPG only), 1440p60 (NV12/MJPG only), 1440p30, 1080p60, 1080p30, 720p60, 720p30, 540p60, 540p30
Video resolutions: (USB 2.0)	1080p60, 1080p30, 720p60, 720p30, 540p60, 540p30
Dimensions:	104 x 53.5 x 52 mm | 4.1 x 2.1 x 2.0 in (without mount)
Weight:	115 g | 0.25 lb (without mount and cable)
Supported Filters:	49 mm
Connection:	USB Type-C

Federal Communication Commission Interference Statement

This device complies with Part 15 of the FCC Rules. Operation is subject to the following two conditions: (1) This device may not cause harmful interference, and (2) this device must accept any interference received, including interference that may cause undesired operation.

This equipment has been tested and found to comply with the limits for a Class B digital device, pursuant to Part 15 of the FCC Rules. These limits are designed to provide reasonable protection against harmful interference in a residential installation. This equipment generates, uses and can radiate radio frequency energy and, if not installed and used in accordance with the instructions, may cause harmful interference to radio communications. However, there is no guarantee that interference will not occur in a particular installation. If this equipment does cause harmful interference to radio or television reception, which can be determined by turning the equipment off and on, the user is encouraged to try to correct the interference by one of the following measures:

- Reorient or relocate the receiving antenna.
- Increase the separation between the equipment and receiver.
- Connect the equipment into an outlet on a circuit different from that to which the receiver is connected.
- Consult the dealer or an experienced radio/TV technician for help.

FCC Caution: Any changes or modifications not expressly approved by the party responsible for compliance could void the user's authority to operate this equipment. This equipment complies with FCC radiation exposure limits set forth for an uncontrolled environment. This equipment should be installed and operated with a minimum distance of 20 cm between the radiator and a human body.

For questions about Elgato product compliance with FCC regulations, please contact: Compliance Officer, Corsair Memory Inc., 115 North McCarthy Blvd, Milpitas, CA 95035, USA

This device contains licence-exempt transmitter(s) / receiver(s) that comply with Innovation, Science and Economic Development Canada's licence-exempt RSS(s).
Operation is subject to the following two conditions: (1) This device may not cause interference. (2) This device must accept any interference, including interference that may cause undesired operation of the device. This product complies with the Canada portable RF exposure limit set forth for an uncontrolled environment and are safe for intended operation as described in this manual. The further RF exposure reduction can be achieved if the product can be kept as far as possible from the user body or set the device to lower output power if such function is available. This Class B digital apparatus meets all requirements of the Canadian Interference-Causing Equipment Regulations. CAN ICES (B)/NMB (B).

L'émetteur / récepteur exempt de licence contenu dans le présent appareil est conforme aux CNR d'Innovation, Sciences et Développement économique Canada applicables aux appareils radio exempts de licence.
L'exploitation est autorisée aux deux conditions suivantes : (1) L'appareil ne doit pas produire de brouillage; (2) L'appareil doit accepter tout brouillage radioélectrique subi, même si le brouillage est susceptible d'en compromettre le fonctionnement Ce produit est conforme aux restrictions d'exposition aux RF portables du Canada définies pour un environnement non contrôlé et sûr pour le fonctionnement envisagé, tel que décrit dans ce manuel. Les niveaux d'exposition peuvent continuer à baisser si le produit peut être éloigné le plus possible de l'utilisateur, ou si l'appareil est défini sur une puissance de sortie inférieure, sous réserve que cette fonction soit disponible. Cet appareil numérique de la classe B respecte toutes les exigences du Règlement sur le materiel brouilleur du Canada. CAN ICES (B)/NMB (B).

The declaration of conformity for Elgato products is available at www.elgato.com/doc

Applicant Name (상호명): Corsair Memory, Inc.
Product Name (제품명칭): Elgato Facecam 4K
Model No. (모델명): 20WAF9901

Manufactured Year & Month (제조연월): Please refer to gift box sticker
Manufacturer & Origin (제조자 및 제조국가): Corsair Memory, Inc./Please refer to gift box sticker
A/S : (주)컴스빌, 1522-1460

R-R-CSI-20WAF9901

Corsair Memory Inc., 115 North McCarthy Blvd, Milpitas, CA 95035, USA. Corsair Components Limited, 1020 Eskdale Road, Winnersh Triangle, Wokingham, RG41 5TS, UK. Corsair Memory BV, Wormerweg 8, 1311 XB, Almere, Netherlands. Copyright 2024 Corsair Memory Inc. All rights reserved. Elgato and the Elgato logo are trademarks of Corsair Memory Inc., registered in the U.S. and other countries. SONY and STARVIS are registered trademarks of Sony Corporation. All other trademarks belong to their respective owner.

Customer Support: help.corsair.com

elgato /elgato