EX1030NX NDI Outdoor PTZ

User Guide



Contents

Important Information
What's In The Box?
Optional Accessories
Recommended Peripherals
Overview

Features
Camera Diagrams & Dimensions
Connecting the Camera
Power
Network
Video Output
Control Input
Audio Input
Genlock
Tally Light
Web Interface Configuration
Updating the Firmware
Using the Wiper
System Menus
Technical Specifications
Bolin Discovery Tool
Password Reset Help

Important Information

Thank you for purchasing our product. If there are any questions, please contact the authorized dealer.
Before operating the unit, please read this manual thoroughly and retain it for future reference.

Copyright

Copyright 2015-2024 Bolin Technology, all rights reserved. No part of this manual may be copied, reproduced, translated, or distributed in any form or by any means without prior consent in writing from our company.

Trademark Acknowledgment

Bolin Technology's trademarks and logos are the property of Bolin Technology. Other trademarks, company names and product names contained in this manual are the property of their respective owners.

Trademarks and Registered Trademark Acknowledgement

• Microsoft, Windows, ActiveX, and Internet Explorer are registered trademarks of Microsoft Corporation in the U.S. and/or other countries.
• HDMI, the HDMI logo and High-Definition Multimedia Interface are trademarks or registered trademarks of HDMI Licensing, LLC in the United States and other countries.
• The Software may contain h.264/AVC video technology, the use of which requires the following notice from MPEG-LA, L.L.C.:

> THIS SOFTWARE IS LICENSED UNDER THE AVC PATENT PORTFOLIO LICENSE FOR THE PERSONAL AND NON-COMMERCIAL USE OF A CONSUMER TO (I) ENCODE VIDEO IN COMPLIANCE WITH THE AVC STANDARD ("AVC VIDEO") AND/OR (II) DECODE AVC VIDEO THAT WAS ENCODED BY A CONSUMER ENGAGED IN A PERSONAL AND NON-COMMERCIAL ACTIVITY AND/OR WAS OBTAINED FROM A VIDEO PROVIDER LICENSED TO PROVIDE AVC VIDEO. NO LICENSE IS GRANTED OR SHALL BE IMPLIED FOR ANY OTHER USE. ADDITIONAL INFORMATION MAY BE .OBTAINED FROM MPEG LA, L.L.C. SEE http://www.mpegla.com

• HEVC/H.265 Covered by one or more claims of patents listed at patentlist.hevcadvance.com
• HDBaseT is a trademark of the HDBaseT Alliance.
• ONVIF trademarks and logos are to be used per the guidelines established in this and other ONVIF policies and documents, including the ONVIF Rules of Membership and the ONVIF Logo Guidelines1.
• Other trademarks, company names and product names contained in this manual are the property of their respective owners.

Legal Notice

Attention:

To ensure account security, the user should change the password after their first login. The user is recommended to set a strong password (no less than eight characters). Password login does not apply to certain models that do not need password login.
The contents of this document are subject to change without prior notice. Updates will be added to the new version of this manual. Improvements or updates to the products or procedures described in the manual will be made readily.
The best effort has been made to verify the integrity and correctness of the contents in this document, but no statement, information, or recommendation in this manual shall constitute a formal guarantee of any kind, expressed or implied. Responsibility for any technical or typographical errors in this manual will not be held.
The product appearance shown in this manual is for reference only and may be different from the actual appearance of the user's device.
This manual is a guide for multiple product models and so it is not intended for any specific product.
In this manual, the illustrations of the displayed interface, parameters displayed, drawings, and value ranges may vary with models. The user should refer to the actual product for details.
Due to uncertainties such as the physical environment, discrepancies may exist between the actual values and reference values provided in this manual.
Use of this document and the subsequent results shall be entirely on the user's own responsibility.
Before operating the unit, the user should read this manual thoroughly and retain it for future reference.

Symbols

Symbol	Description
	**WARNING** Contains important safety instructions and indicates situations that may cause bodily injury.
	**CAUTION** Users must be careful. Improper operations may cause damage or malfunction of product.
	**NOTE** Indicates useful or supplemental information about the use of the product.

Safety Information



WARNING:

Installation and removal of the unit and its accessories must be carried out by qualified personnel. You must read all of the Safety Instructions supplied with your equipment before installation and operation.
• If the product does not work properly, please contact your dealer. Never attempt to disassemble the camera yourself. (We will not assume any responsibility for problems caused by unauthorized repair or maintenance.)
• This installation should be made by a qualified service person and should conform to all the local codes.
• When shipping, the camera should be packed in its original packaging.
• Make sure the power supply voltage is correct before using the camera.
• Do not drop the camera or subject it to physical shock.
• Do not touch sensor modules with fingers. If cleaning is necessary, use a clean cloth with a bit of ethanol and wipe it gently. If the camera will not be used for an extended period of time, put on the lens cap to protect the sensor from dirt.
• Do not aim the camera lens at the strong light such as sun or incandescent lamp. The strong light can cause fatal damage to the camera.

Maintenance Precautions:

• If there is dust on the front glass surface, remove the dust gently using an oil-free brush or a rubber dust blowing ball.
• If there is grease or a dust stain on the front glass surface, clean the glass surface gently from the center outward using anti-static gloves or an oil-free cloth. If the grease or the stain still cannot be removed, use anti-

static gloves or an oil-free cloth dipped with detergent and clean the glass surface gently until it is removed.
• Do not use organic solvents, such as benzene or ethanol, when cleaning the front glass surface.

Regulatory Compliance

FCC Part 15

This equipment has been tested and found to comply with the limits for digital devices, pursuant to part 15 of the FCC Rules. These limits are designed to provide reasonable protection against harmful interference when the equipment is operated in a commercial environment. This equipment generates, uses, and can radiate radio frequency energy and, if not installed and used in accordance with the instruction manual, may cause harmful interference to radio communications. Operation of this equipment in a residential area is likely to cause harmful interference, in which case the user will be required to correct the interference at his own expense.

This product complies with Part 15 of the FCC Rules. Operation is subject to the following two conditions:
This device may not cause harmful interference.
This device must accept any interference received, including interference that may cause undesired operation.

CE	**LVD/EMC Directive** This product complies with the European Low Voltage Directive 2006/95/EC and EMC Directive 2004/108/EC.
	WEEE Directive–2002/96/EC The product this manual refers to is covered by the Waste Electrical & Electronic Equipment (WEEE) Directive and must be disposed of in a responsible manner.

What's In The Box?

	SDI IP Dual Output Outdoor PTZ Camera (EX1030NX)
	36VDC 4A, Power Supply Adapter (P36-4T)
	Waterproof Cable Fittings
	Safety Chain Lock
	Quick Release Mounting Screws

	Rubber Grommets

Optional Accessories

	ES-WM - **Outdoor Wall Mount Bracket**
	QR-BM - **Outdoor PTZ Upright Mount Base**
	C-PMSB - **PTZ Camera Pendant Mount System for Drop Ceiling/Hard Surface Ceiling**
	C-PMBA - **Pendant Mount Base Adaptor**

Recommended Peripherals

	BL-PP97 - **97W High Power POE Power Supply Unit**
	EG40N - **FAST HEVC Decoder with HDMI/SDI Output**
	KBD-1020N - **PTZ Camera Controller**

Overview

The EX1030NX outdoor NDI HX3 PTZ camera, upgraded from Bolin's legacy outdoor EX1000 Series, is equipped with the newest Sony image block with 30x zoom range lens to provide Full HD (1080P60) crystal clear high-quality color image in tough low light environment and stable image with super image stabilizer to output 3G-SDI, and NDI HX3 video streaming for NDI® and are fully compatible with NDI-enabled hardware and software for Live production in outdoor environment and even in extreme weather conditions.

Features	Gen 3 Upgrades
• Sony 1/2.8 type CMOS sensor STARVIS II • 30X zoom range • Resolution 1080i59.94, 1080p60 • IP Video Resolution: Up to 1080p60 • Video Output: Simultaneous 3G-SDI, IP • RTSP. RTMP, SRT Supported • Visca Over IP, Onvif, FreeD, Serial Control Supported • Extreme Low Light Performance • Super Image Stabilizer • Weatherproof IP67 rated, Nitrogen Filled Housing • NDAA Compliant	• New Sony Image Block • Finer PT Movement - Supports up to 255 VISCA steps • Environment Temperature Sensor • New Adjustable Roll-Axis • Waterproof back panel cable connection • FreeD Control Protocol Enabled • Image Character Generator • Added Rain Wiper • Quick Install and Release Mount • Salt Corrosion Resistant C5 Level Coated

,

Camera Diagrams and Dimensions

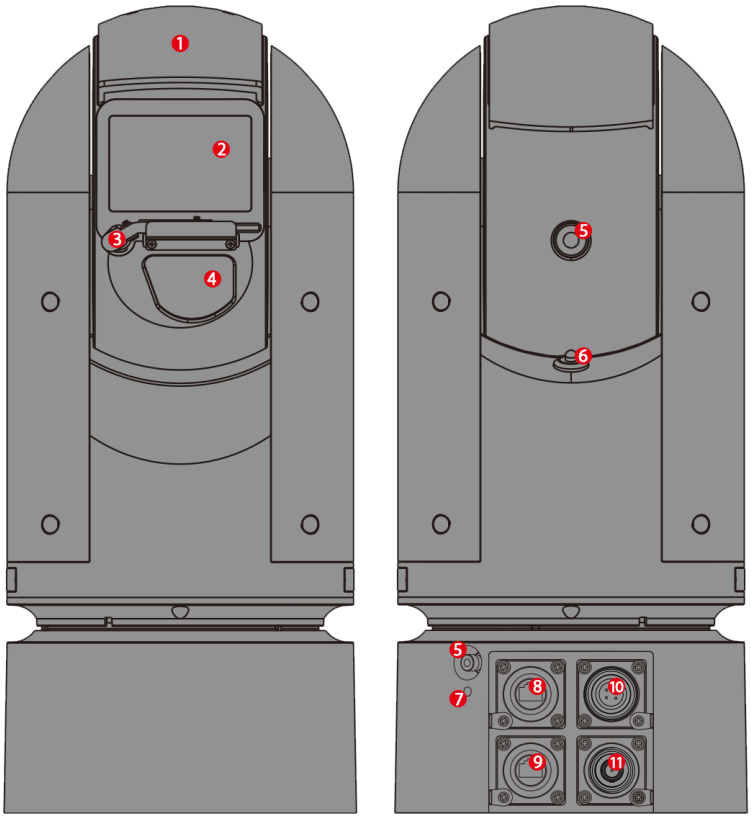

1. Sunshield
2. Image Block
3. Rain Wiper
4. Laser IR Illuminator
5. Nitrogen Filling Valves
6. Environment Temperature Sensor
7. Safety Secure Lock Ring
8. 1G Network Port with PoE++ Power Input
9. RS422 Serial Control Port
10. Power Input Port (DC36V / AC24V)
11. 3G-SDI Port

NOTE: All dimensions listed below are in millimeters.

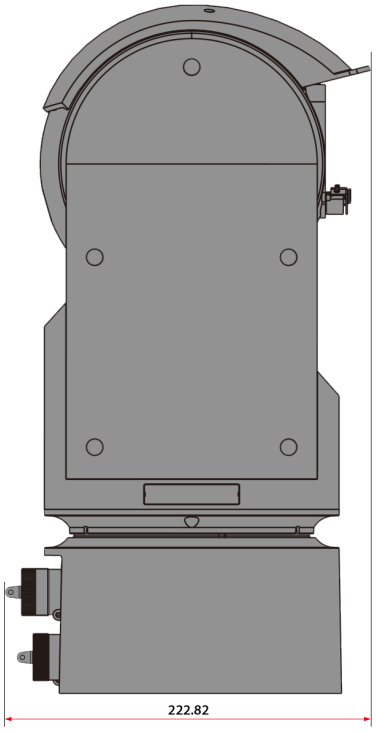

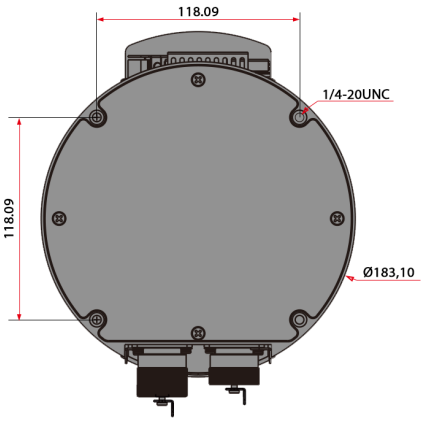

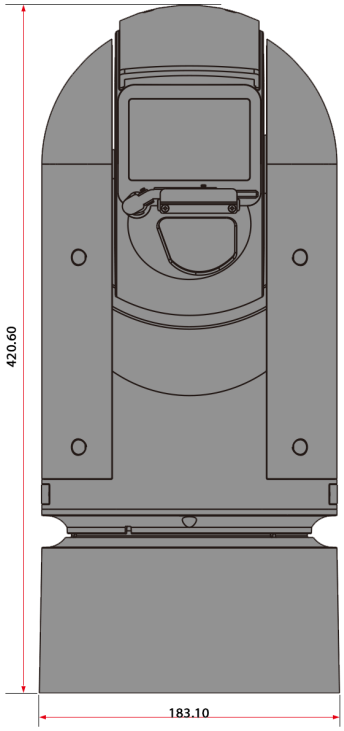

Power Options

Power Requirements

The EX1030H camera is designed for efficient power usage in both idle and active conditions. Power consumption varies depending on operation:

- **Minimum:** 30W (static, no movement)
- **Maximum:** 58W (fully operational with internal heater active)

Please ensure your power source meets these requirements for stable performance.

Option 1: **36V DC 4A Power Adapter (P36-4T)**

- Using the power adapter included in the box.
- Connects directly to the camera's DC input port

IMPORTANT: Only use the **DC power adapter supplied with the camera**. Using any other adapter may damage the camera or void the warranty.

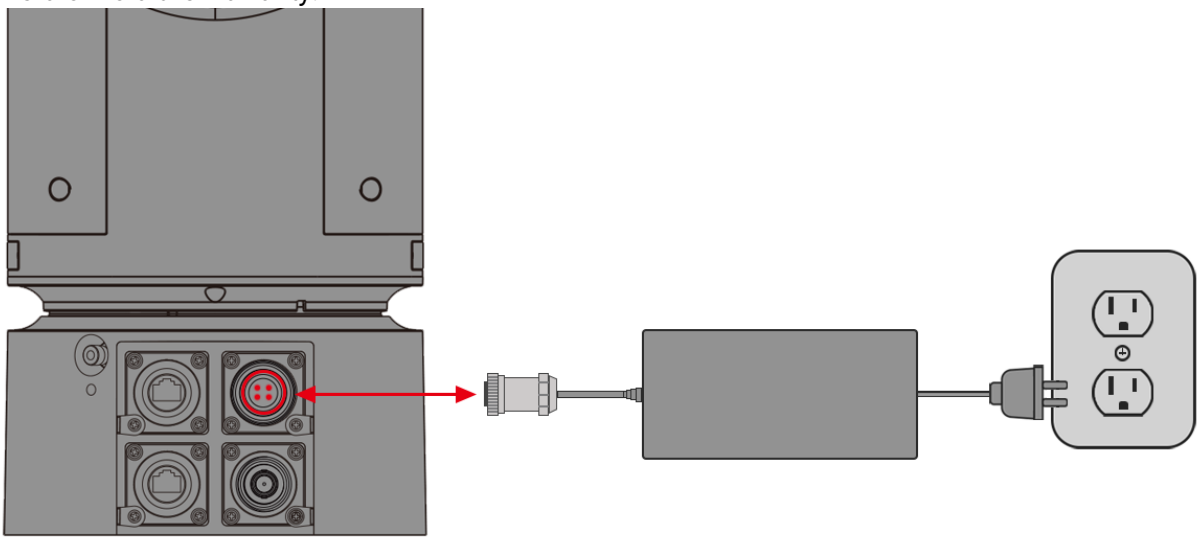

Option 2: **Bolin 97W PoE Injector (BL-PP97)**

- Delivers up to **97W of PoE++ power**
- Connect a CAT6 cable from the injector's PoE output to the camera's LAN port

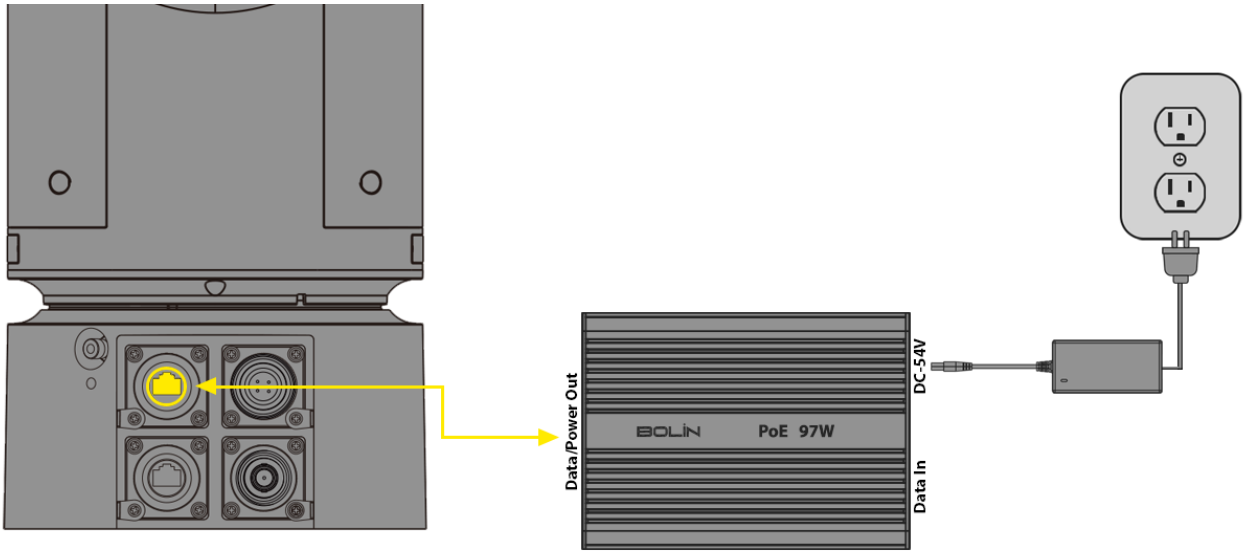

Option 3: **PoE++ Network Switch**

- Must support **IEEE 802.3bt (Type 4, Class 8)**
- Requires **90W per port**
- Connect a CAT6 cable from the switch to the camera's LAN port for both power and data.

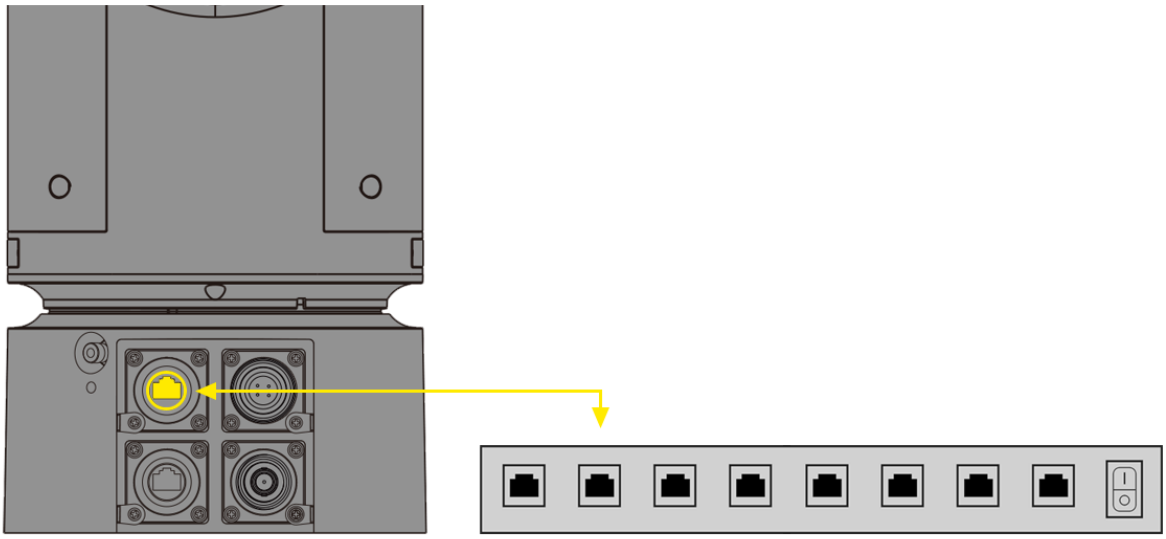

Bolin 36VDC 4A Power Adapter (**P36-4**)	Bolin 97W POE Injector (**BL-PP97**)	Category 6 (CAT6) Cable with RJ45 Connector
		

Network Connection Options

This camera offers a variety of functionalities via a network connection. Besides being powered over Ethernet, a network connection enables the user to adjust camera settings, stream video from the camera to a distant location, and control the PTZ camera functions via the Web Interface.
To set up your camera's network connection, choose one of the following methods:
Option 1: **Use the Power Adapter and a Network Switch.**

- Connect the provided power adapter to the camera's DC input.
- Use a Cat6 Ethernet cable to connect the camera's LAN port to a standard network switch.
- Ensure the network switch is connected to your network for data transmission.

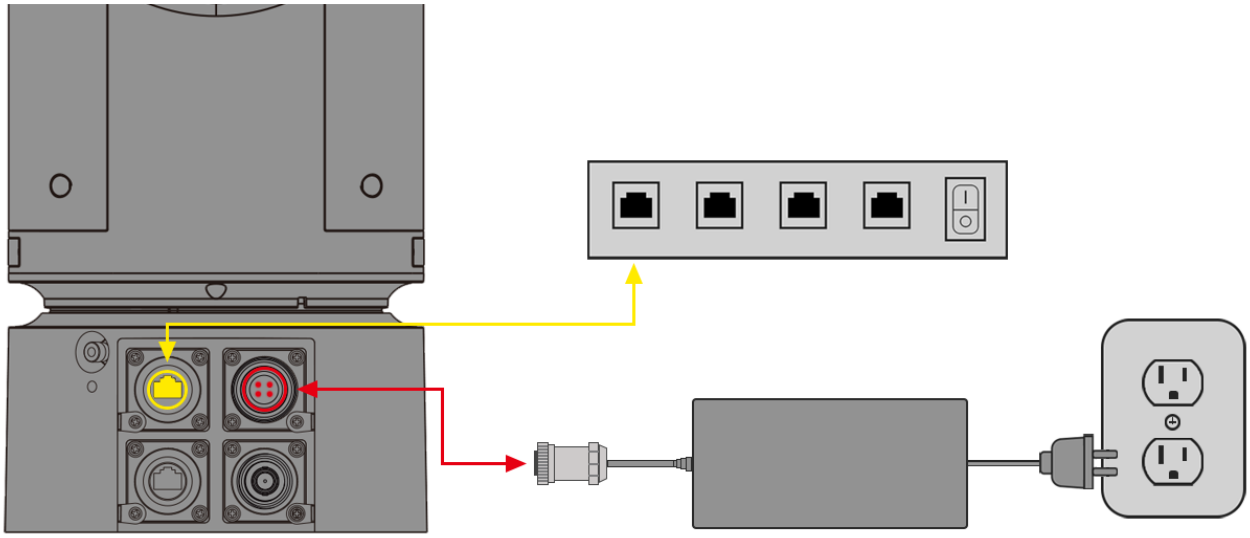

Option 2: **Using a PoE++ Network Switch (Single Cable Connection)**

- Connect a Cat6 Ethernet cable from the camera's LAN/PoE++ port directly to a PoE++-enabled network switch.

Benefit: The PoE++ switch powers the camera and transmits data through a single cable, reducing cable clutter and simplifying installation.

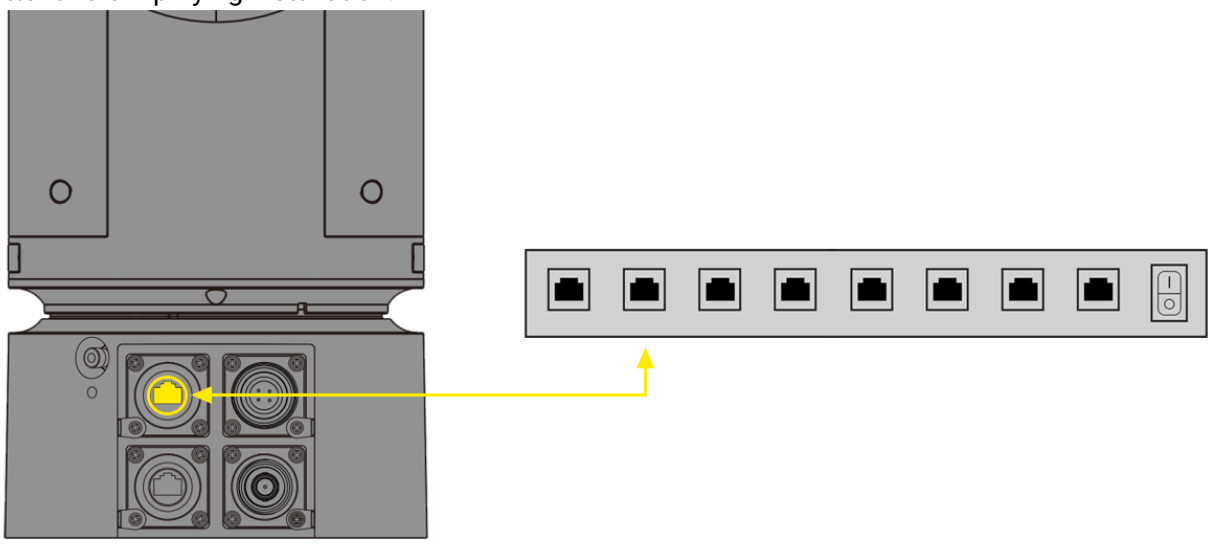

Option 3: **Using Bolin PoE Injector and a Network Switch.**

- Connect a Cat6 Ethernet cable from the PoE injector's PoE output to the camera's LAN/PoE++ port.
- Connect another Cat6 Ethernet cable from the PoE injector's Data In port to a network switch.

- Plug the DC power adapter into the PoE injector.

Benefit: This method allows for longer cable runs while still providing power and data transmission, ideal for installations where the camera is far from a network switch.

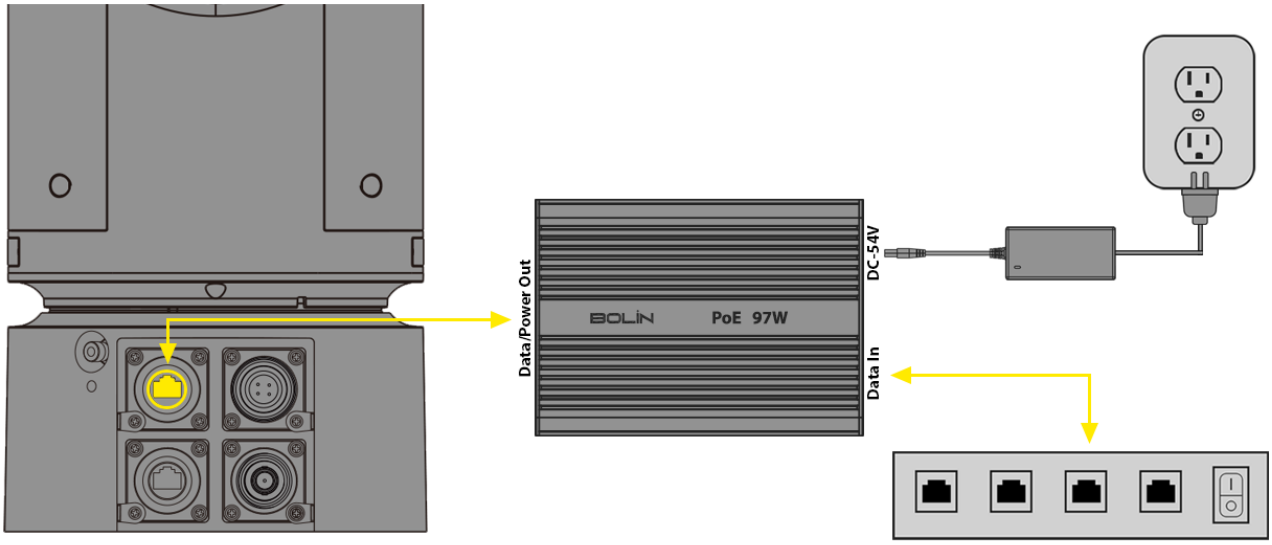

NOTE: Factory-Default Camera Network Settings

Static IP Address: **192.168.0.13**

Subnet Mask: 255.255.255.0

Gateway: 192.168.0.1

To change these settings, refer to the Web Interface Configuration section of this guide.

Video Output

The EX1030NX has multiple video outputs, which can be used simultaneously, and the resolutions can be configured independently.

Full Broadcast SDI Format and Standard

Full Format
1920 x 1080P 60/59.94/50/30/29.97/25
1920 x 1080i 60/59.94/50
1280 x 720P 60/59.94/50
SDI Standard
SMPTE 292M
SMPTE 296M (1.5Gb/s)
SMPTE 424M
SMPTE 274M
SMPTE 425-A (3Gb/s) with SMPTE352 SDI Metadata Supported
NDI Video Streaming Formats
1920 x 1080P 60/59.94/50/30/29.97/25
1280 x 720P 60/59.94/50

3G-SDI Out

Follow these steps to connect to the camera:

1. **Connect the SDI Cable** – Plug one end of a properly rated SDI cable into one of the camera's two SDI outputs. Make sure the BNC connector is securely fastened to prevent it from coming loose during use. Connect the other end to your desired device, such as a switcher, video router, converter, or display.
2. **Power On the Camera** – Turn on the camera and allow it to initialize. Once ready, the video feed will appear on the screen. For the first five seconds, the camera's initial settings will be displayed.

3. **Adjust Output Settings** – Use the OSD (On-Screen Display) menu or the web interface to configure the output resolution and frame rate. For detailed instructions, refer to the Web Interface Configuration section of this guide.

> **NOTE:** It is recommended to use a high-quality, shielded SDI cable rated for the required resolution and transmission distance to ensure optimal signal integrity and reliability.

SDI Standard	Bandwidth	Resolution Supported
SD-SDI	270 Megabits/Second	480i
HD-SDI	1.485 Gigabit/Second	720p / 1080i
3G-SDI	2.970 Gigabit/Second	1080P, 60FPS

IP Stream Out

The camera's IP stream(s) can be enabled and configured through its web interface. To access the web interface, the camera must be connected to a **Local Area Network (LAN)** using a **CAT6 cable**, either through a network switch or directly to a computer. Streaming from the camera also requires an active **internet (WAN) connection**.
Follow these steps to set up IP streaming:

1. **Connect the Camera to the Network** – Plug one end of a **CAT6 cable** into the camera's **LAN/PoE++** port and connect the other end to either a network switch or directly to a computer.
2. **Access the Web Interface** – On a computer, open an **HTML5-enabled web browser** and enter the camera's **IP address**. By default, the camera is set to DHCP, so the IP address is assigned by the network.
3. **Enable and Configure Streaming** – In the web interface, navigate to the **"AV Setup"** menu on the left side. From here, enable and adjust the IP stream settings as needed.

VISCA over IP

Bolin PTZ cameras support **VISCA over IP** communication, allowing for remote control and integration with compatible systems over a network. To establish a connection, ensure that your control system or software is configured to communicate with the camera using **port 52381**.

Key Requirements:

- **Network Configuration:** The camera and control device must be on the same subnet or properly routed for network communication.
- **Port Settings:** Ensure that **port 52381** is open and accessible for VISCA over IP commands.
- **Control Protocol:** Standard VISCA over IP commands can be used for functions such as pan, tilt, zoom, focus, and preset recalls.

> **NOTE:** The VISCA over IP port of the controller MUST be set to **52381** to communicate with and control the camera.

ONVIF Protocol

Bolin PTZ cameras support **ONVIF 2.4 (Profile S)**, ensuring compatibility with a wide range of third-party applications, including PTZ controllers and streaming software. These cameras use the **standard ONVIF port 2000** for communication.
ONVIF compliance enables **device discovery, video streaming, and PTZ control**, making these cameras ideal for **live production, broadcasting, and professional AV workflows**.

Integrating with ONVIF-Supported Software:

1. Ensure the camera is connected to the network and properly configured.

2. Use an ONVIF-compliant application to detect the camera.
3. Enter the camera's **IP address, ONVIF credentials (web login credentials), and port 2000** during setup.
4. Configure video and PTZ settings as needed for the application.

ONVIF 2.4 (Profile S)
ONVIF Port: 2000

RS-422 Serial Commands (VISCA)

The camera is equipped with an RS-422 port, which facilitates VISCA control over serial commands. This RS-422 port is also compatible with RS-485. The camera can be connected via a serial connection to a PTZ controller or a computer. This allows for the execution of pan, tilt, and zoom operations, as well as the performance of preset recalls.

> **CAUTION:** When one connects the camera via serial to a Sony PTZ controller, it differs from the process with a non-Sony PTZ controller. It is crucial to verify the pin settings for the specific controller in use.

1. The camera should be powered on, and the OSD menu should be opened or the Web Interface should be logged into using any web browser. Proceed to the system settings and adjust the baud rate to match that of the controller. The VISCA ID should be set to a number between 1 and 7.
2. A standard terminated CAT5 or CAT6 cable can be used to directly connect the camera to the controller. Alternatively, the included RJ45 to RS422 Control Cable Adapter can be used to connect unterminated CAT5/CAT6 cables between the camera and controller. The pin connection diagrams provided below should be followed, taking into account the specific controller in use and the desired connection.

Use RS-422 (VISCA) / RS485 (PELCO P/D)

For camera operations, the RS-422/485 port can be utilized to connect controllers, such as a joystick keyboard or a PC station. This allows for the effortless management of pan, tilt, and zoom functions, as well as access to all preset functions using the controller's buttons.
To operate a PC station, it is essential to have a software application that is compatible with this unit.

SONY Keyboard RS422 Connection

Guide for Establishing RS422 Connection and Daisy Chain Configuration for Multiple Cameras with a SONY Controller.

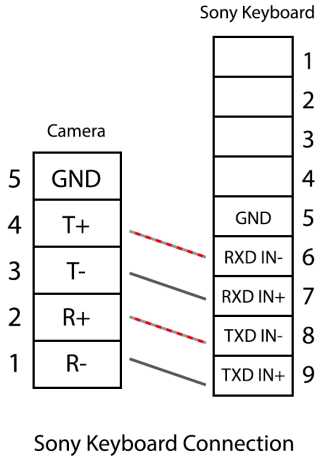

Sony Keyboard Connection

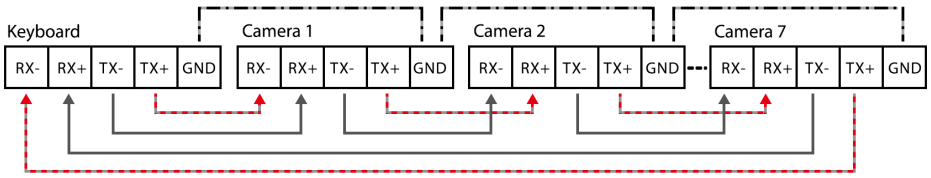

RS422 (VISCA) Daisy Chain Multiple Cameras Connection (Sony Keyboard)

VISCA (Non-Sony) Keyboard RS422 Connection

Guide for Establishing RS422 Connection and Daisy Chain Configuration for Multiple Cameras with a Non-

Sony Controller:

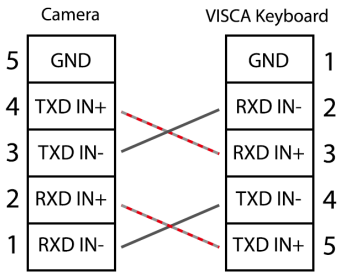

VISCA Keyboard Connection

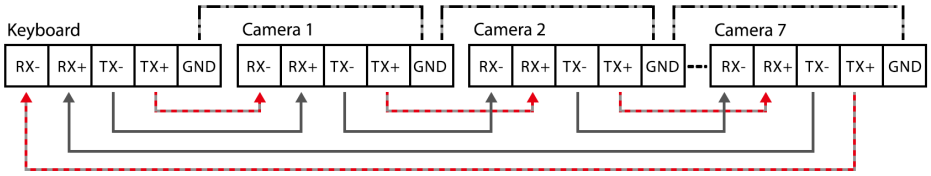

RS422 (VISCA) Daisy Chain Multiple Cameras Connection

The included extension cables, along with the RJ45 to RS422 Phoenix connector adapter, should be utilized to establish an RS422 connection for the control device.

Web Interface Configuration

Once connected to the network, the camera can be configured and controlled through the web interface on any web browser that supports HTML5. This next section will explain the various sections of the web interface and what they can do.

Login Page

To log in to the web interface, first, make sure that the camera is connected to the network and the computer is on the same subnet as the camera.

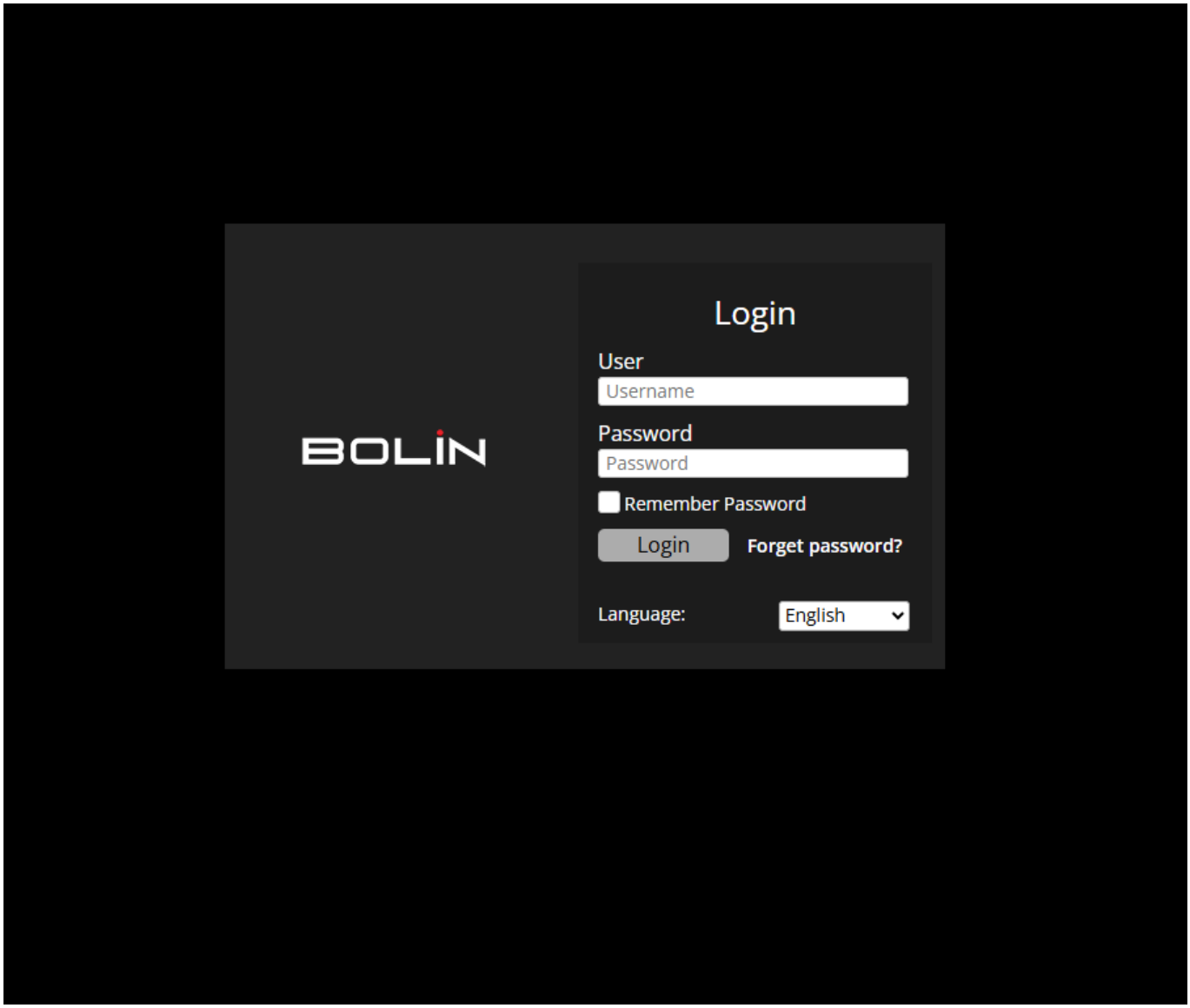

Factory-Default Camera Network Settings:
Static IP Address: **192.168.0.13**
Subnet Mask: **255.255.255.0**
Gateway: **192.168.0.1**

> **NOTE:** To obtain the IP address of the camera, open the OSD Menu and scroll down to the Status section. Alternatively, download Bolin's IPC search tool from the website (www.bolintechnology.com) onto a Windows computer and run the tool to discover the camera on the network.

1. Once the camera's IP address has been obtained, the user should enter it into the web browser on their computer.
2. The user will be prompted to enter a username and password. By default, the credentials are:
   Username: admin
   Password: admin

   > **NOTE:** The first time you log in to the web interface, you will be prompted to set a new password. For best security practices, enter a password that is at least 8 digits long, and contains one capital letter, one lowercase letter, one number, and one symbol.

3. Once the user enters the credentials, they should press the login button.

NOTE: Forgot Your Password? If the user forgets/loses the password to their camera, our support team can help them recover it. The user must first download the IPCSearch tool from our website (www.bolintechnology.com) onto a Windows computer that is on the same subnet as the camera. Then, run the tool to search for their camera. Select the camera that they wish to recover and click the "Forgot Password" button at the bottom of the window.

The program will provide the user with a generated key. Email "support@bolintechnology.com" with the key. Our support team will generate and provide the user with a temporary password that is valid for only 24 hours. The user should enter this temporary password to create a new password within 24 hours of receiving the key, otherwise, they will need to follow this procedure again. The user should not turn their camera off while waiting to receive the temporary password, otherwise, the temporary password associated with the key will become invalid.

Live View

Once the user logs in to the camera, they will be taken to the Live View page.

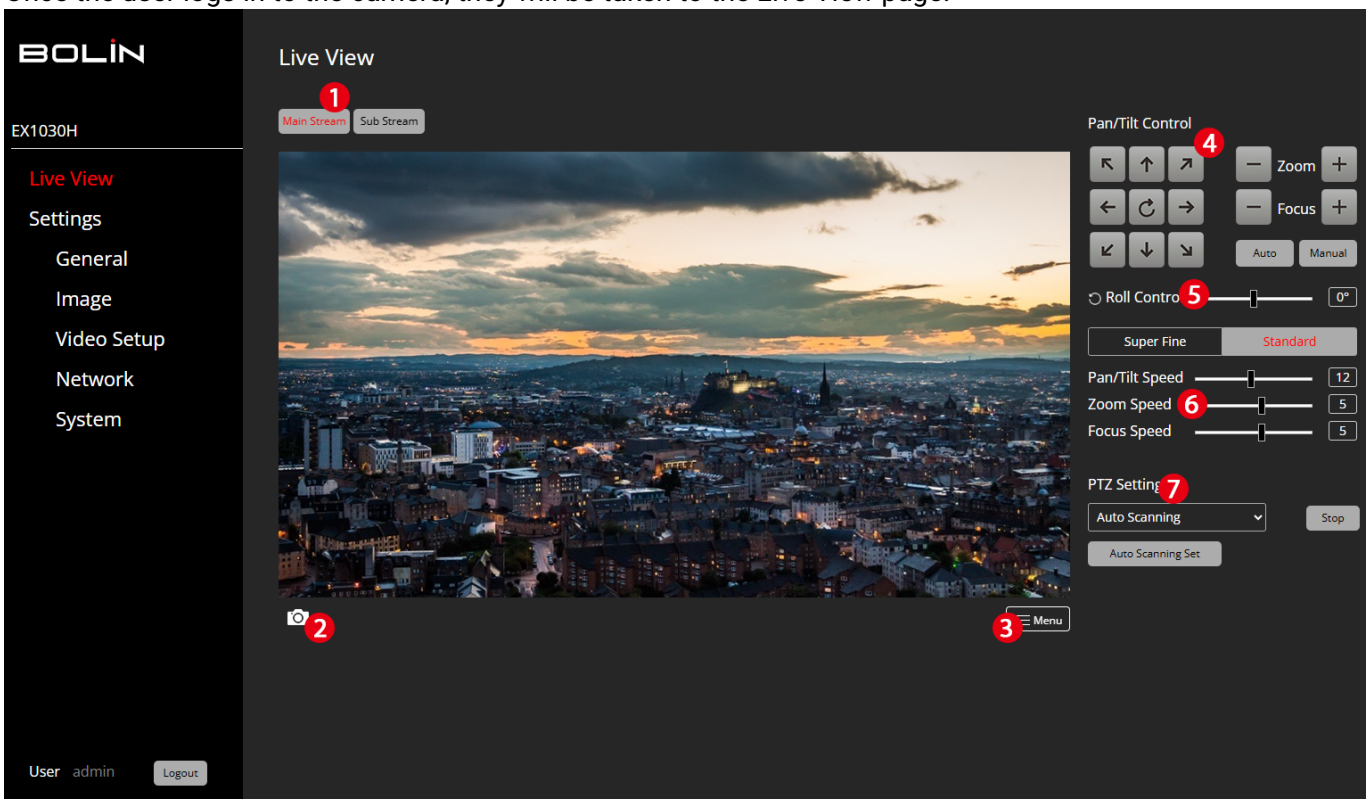

This screen provides a real-time video feed from the EX1030NX and offers manual camera control through the Live View interface. The numbered items below correspond to key functions:

1. **Stream Selection** – Toggle between the Main Stream and Sub Stream for monitoring different video qualities.
2. **Snapshot Button** – Capture a still image from the live feed.
3. **Menu Button** – Opens the on-screen display (OSD) menu for additional camera settings.
   OSD Menu Options:
   - **EXPOSURE:** Adjust brightness, shutter speed, and gain.
   - **WHITE BALANCE:** Configure color correction settings.

- **PICTURE:** Modify contrast, sharpness, and other image properties.
- **GAMMA:** Fine-tune gamma correction.
- **LENS:** Control lens-related settings.
- **PAN TILT:** Adjust pan/tilt behavior.
- **SYSTEM:** Configure network and operational settings.
- **STATUS:** View camera diagnostics and system information.

4. **PTZ Controls** – Allows manual pan, tilt, zoom, and focus adjustments.
5. **Roll-Axis Control** – Adjust image roll angle.
6. **Speed Settings** – Toggle between Super Fine and Standard speed modes, and customize pan, tilt, zoom, and focus speeds for precise and responsive control.
7. **PTZ Presets & Auto Scanning** – Access preset positions or start/stop auto-scanning patterns.

Creating and Recalling Presets

To save presets, the user should adhere to the following steps:

1. Utilize the PTZ controls of the web interface, IR controller, or a PTZ controller to adjust the camera to the position(s) they wish to save as a preset.
2. After positioning the camera, click on the 'Create' button. Subsequently, select the preset number under which they want to save this setting. Label the preset in the 'Name' field and click 'Save'.
3. To recall a preset, select the preset number on the Web Interface and click the "Go" button.
4. A saved preset can also be deleted by selecting it and clicking on the Delete button.

In the **Preset** section of the camera's web interface, you'll find several configuration options to optimize performance for different conditions. Here's an overview:

- **58 Night Mode (Set) / Day Mode (Call):** Activate Night Mode to enhance visibility in low-light conditions or switch to Day Mode for standard daytime operation.
- **59 Auto Day/Night (Call):** Automatically toggles between day and night modes based on ambient light levels.
- **61 Defog OFF (Set) / ON (Call):** Enables or disables the defogging feature to clear mist or fog from the lens.
- **62 Sngl. Wiper ON (Set) / OFF (Call):** Activates a single wipe to remove debris or water from the lens; can be turned off when not needed.
- **63 Heater OFF (Set) / ON (Call):** Controls the built-in heater, preventing freezing in cold environments.
- **64 Cont. Wiper ON (Set) / OFF (Call):** Engages the continuous wiper function to keep the lens clear.
- **95 OSD Menu (Call):** Opens the On-Screen Display (OSD) menu for direct camera setting adjustments.

Adjusting and Controlling PTZ Functions

On the "Live View" page, the user will observe a "Menu" icon situated at the bottom right of the live view image. Additionally, on the right side of the page, there are "Pan/Tilt Controls". This section comprises a set of arrows and sliders, specifically designed to control the camera.

The arrows are utilized to pan (move side to side) and tilt (move up and down) the camera. The focus and zoom buttons are provided for the user to adjust the view. The user can zoom in (+) or out (-), and manually adjust the focus to be closer (+) or further (-).

Furthermore, there are speed-setting sliders that permit the user to alter the speed of the camera's movements, including pan, tilt, focus, and zoom. This allows the user to customize the camera's operations to suit their needs.
Within the **PTZ Setting** drop-down menu, the user will discover the following options:

1. **Auto-Scanning**: The camera image pans automatically from left to right or right to left at a speed defined by the user (Speeds 1-8).
2. **Preset**: The user can set and recall up to 64 camera presets (The camera supports saving a total of 255 presets). These presets can be recalled through the web interface, IR Remote, or PTZ Controller.
3. **Tracking**: The camera will record a series of presets that are recalled in a specified order.
4. **Scanning**: The camera image pans from left to right or right to left between up to 12 points defined by the user at a speed also defined by the user (Speeds 1-8).
5. **Power On Action**: Users can define a set of actions that a camera performs (preset recall, scan, trace, or cruise) once powered on.
6. **Cruise**: The camera will record a series of movements that an operator makes, which can then be recalled whenever a user prefers.

Creating and Recalling Presets

To save presets, the user should adhere to the following steps:

1. Utilize the PTZ controls of the web interface, IR controller, or a PTZ controller to adjust the camera to the position(s) they wish to save as a preset.
2. After positioning the camera, click on the 'Create' button. Subsequently, select the preset number under which they want to save this setting. Label the preset in the 'Name' field and click 'Save'.
3. To recall a preset, select the preset number on the Web Interface and click the "Go" button.
4. A saved preset can also be deleted by selecting it and clicking on the Delete button.

Adjusting OSD Menu Settings from the Web Interface

The OSD Menu settings can be accessed and adjusted from the Web Interface. On the "Live View" page, locate and click the "Menu" icon situated at the bottom right of the live view image to display the OSD menu. The user can navigate through these settings using the arrows under "Pan/Tilt Control". The middle button is used to select, and the right arrow button is used to modify the setting. To exit this menu, simply click on the "Menu" icon again. The settings available in this menu encompass:

- Adjust Exposure, White Balance, Picture (Noise Reduction, E-Flip, ND Filter, IR Filter), Gamma, Lens (Focus, Stabilization), Pan & Tilt, Genlock, System (Pelco, Visca, IR, Baud Rate, Tally, Audio, Video Format) settings, and view System Status.

Settings

Device

The Device tab provides key device information and allows the user to modify the **PTZ Camera's Name**. It also displays the **Model Number** and firmware versions. These details are essential for firmware updates, support, and troubleshooting.

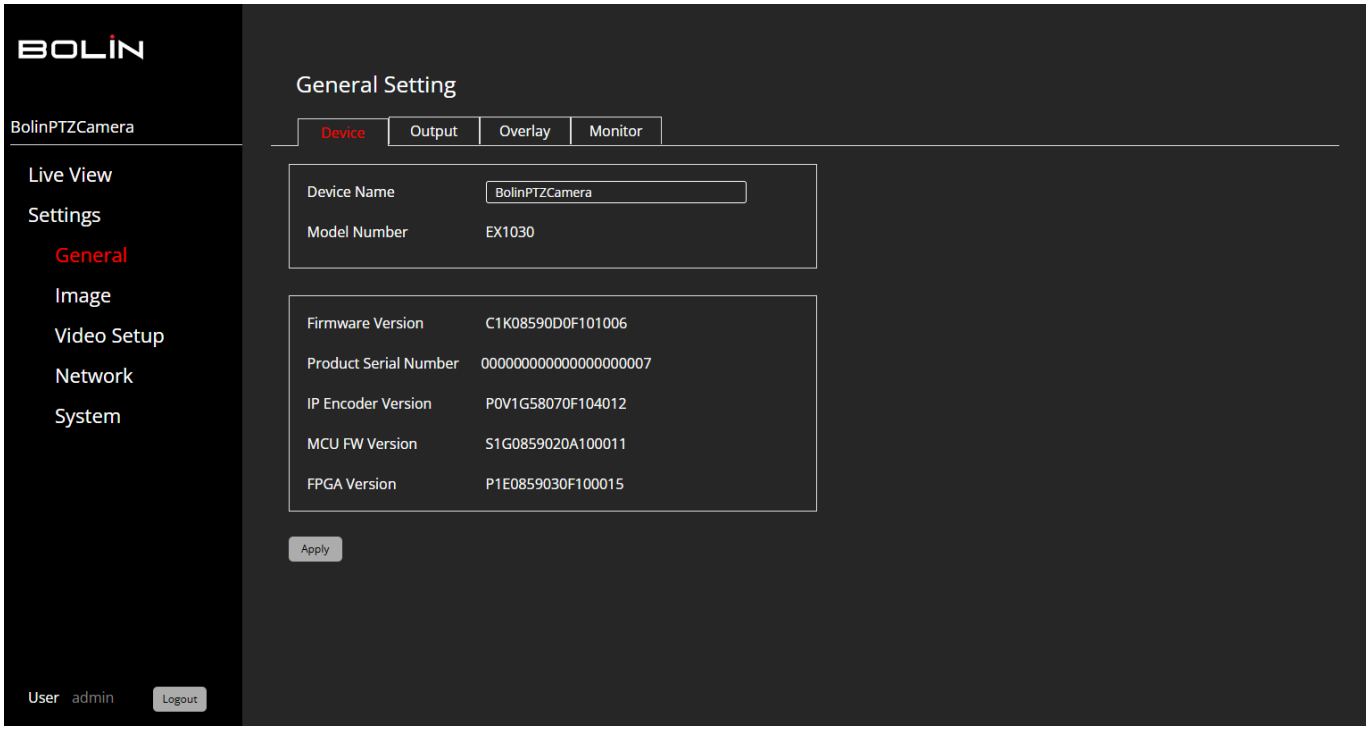

Output

On the "Output" tab, users can define what resolution/frame rates, color space, bit depth, and color format they would like the camera's physical ports to output. Users can click the parameter they would like to modify and select from the drop-down menu. Once the desired settings have been chosen, click on the 'Save' button. At the bottom of this tab, there is a section for "Output Status-SDI" where users can see the settings of what is being output from the device.

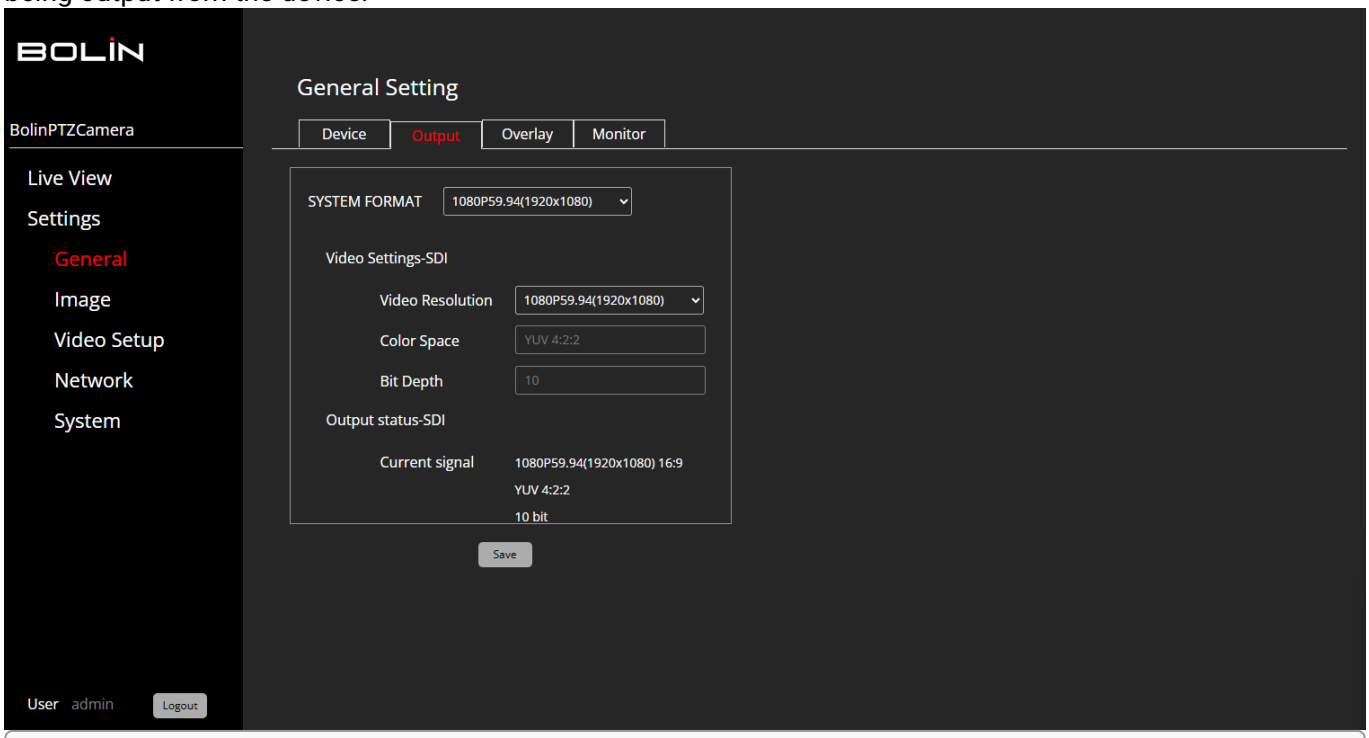

NOTE: The "System Format" will set the highest resolution and frame rate for the camera. While the frame rates are the same, output resolutions are simultaneous and independent of each other. The HDMI, SDI/Optical Fiber, and IP outputs can be set to different resolutions without impacting each other. Optical Fiber output resolution is determined by the SDI resolution.

Overlay

The Overlay function is a feature that displays characters on your screen, enabling users to incorporate crucial information (either text or image) into their IP video feed.

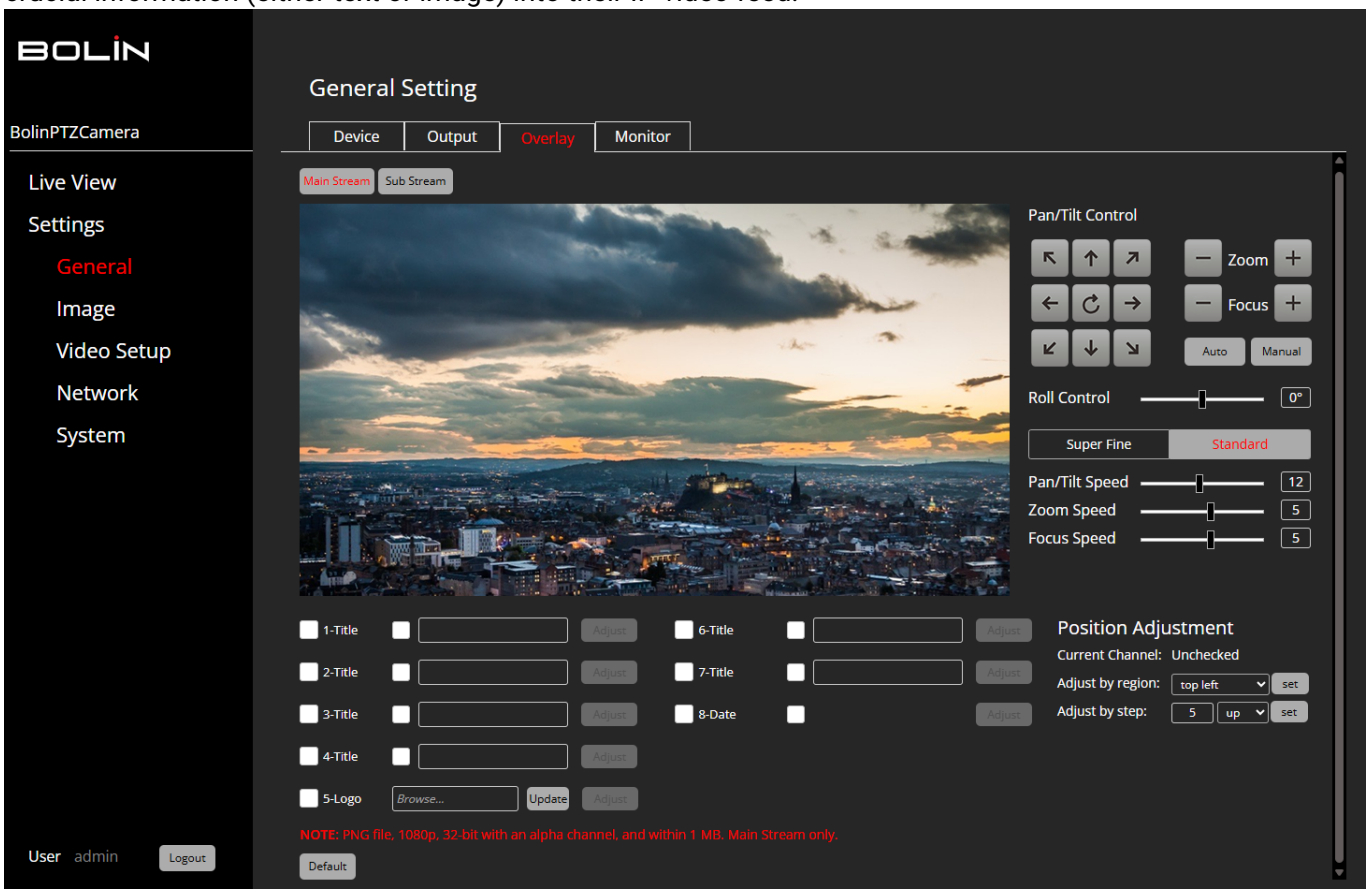

Steps to implement an on-screen overlay:

1. Begin by adding text to the title bar, such as in '1-Title', then click on the checkbox located furthest to the left (which will turn red with a white check mark) to display it on the live feed image.
2. The box closest to the text bar is initially set in white. To alter the text color, click on this box. The user can select from white, black, yellow, red, and blue.
3. To reposition the text within the live feed image, make use of the 'position adjustment' section situated on the left of the page.
4. The '5-logo' option allows the user to upload an image. The image must be in PNG format and have dimensions less than 1920x1080 pixels. Please note that this image will only be displayed on the user's main stream.

Monitor

The **Monitor** tab allows users to view a real-time video preview from the camera and make on-the-fly adjustments to PTZ control, image settings, and temperature readout preferences.

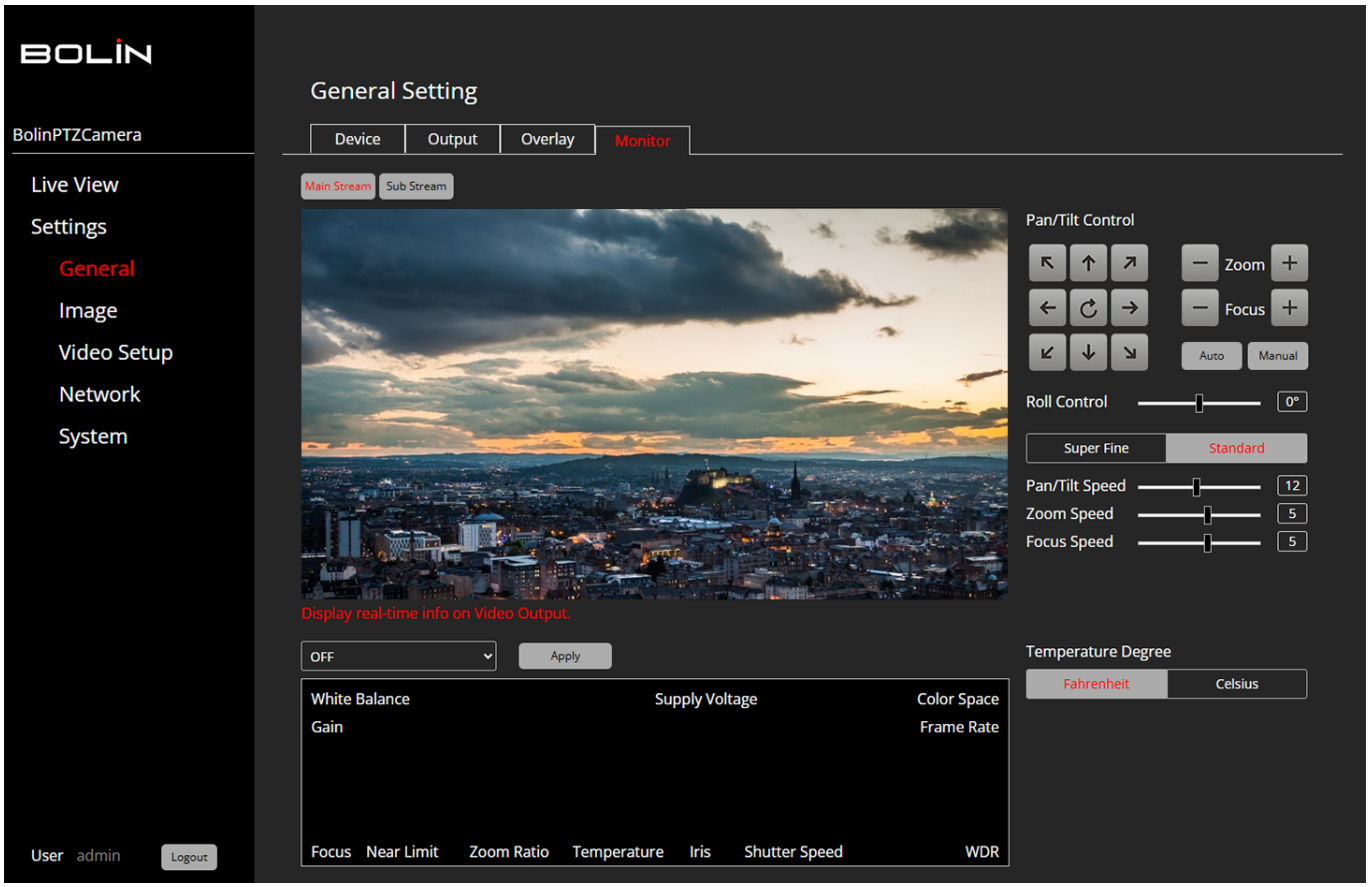

- **Display Info Overlay**:
  The dropdown menu controls the on-screen display of real-time camera data. Options include:
  - **OFF** – No on-screen info
  - **SDI** – Display info only on SDI output
  - **IP** – Display info only on IP stream
  - **SDI + IP** – Display info on both outputs
- **Camera Status Panel**:
  Displays real-time operating data such as:
  - **White Balance, Gain, Near Limit, Zoom Ratio, Temperature, Iris, Shutter Speed, WDR**, and more
  - **Supply Voltage, Color Space, Frame Rate**
- **Temperature Display Unit**:
  Select between **Fahrenheit** and **Celsius** to view the internal temperature of the camera.

Image

The image settings page consists of 9 tabs. Exposure, White Balance, Picture, Color Matrix, Gamma, Lens, Pan Tilt, Genlock, and System.

Exposure

The Exposure menu is utilized for configuring settings associated with exposure.

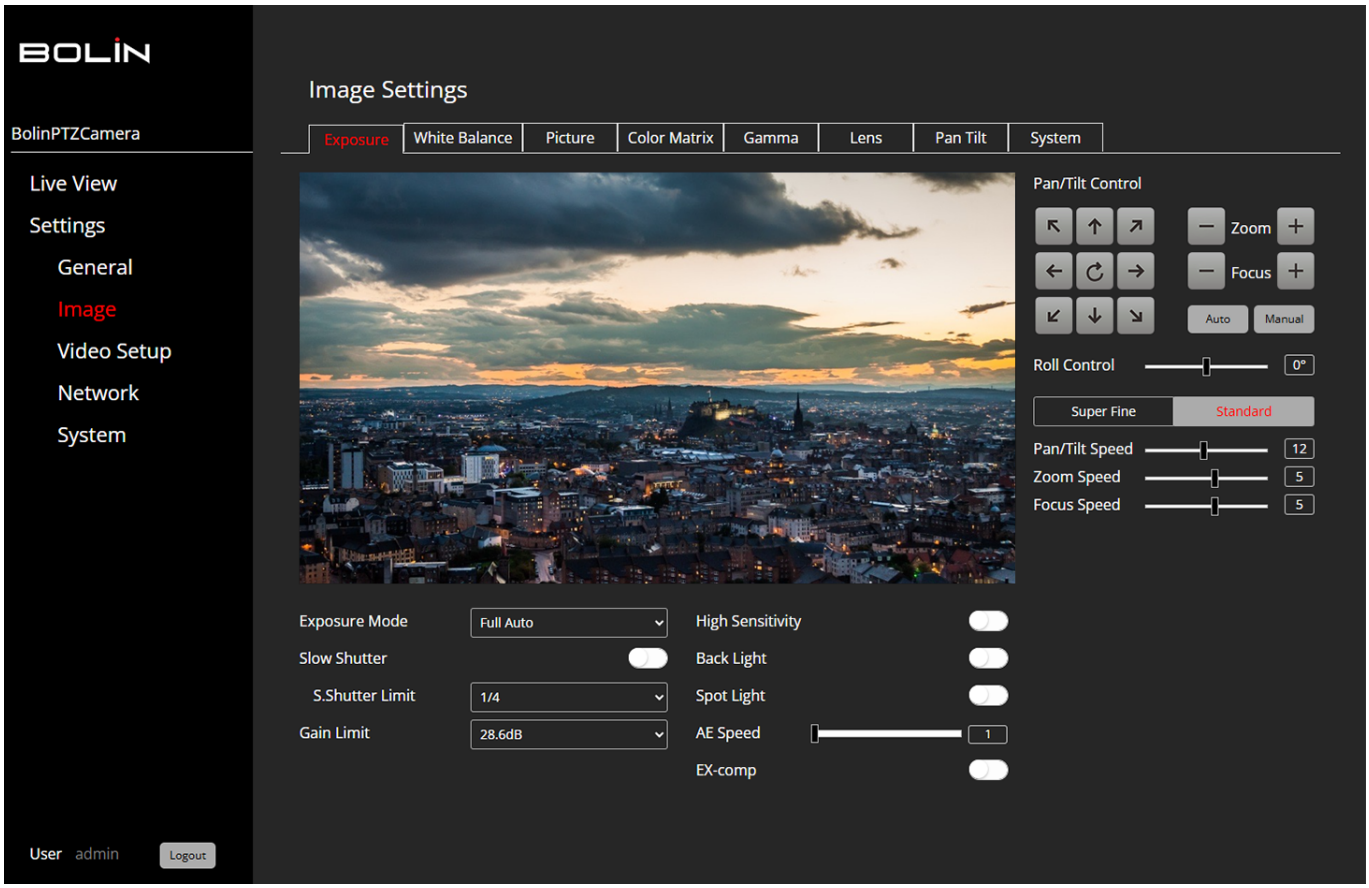

Exposure Mode:

Full Auto: The camera automatically adjusts exposure based on current lighting conditions.

Manual: Manual adjustment options will become available when selected.

Slow Shutter: On/Off toggle switch: When enabled, allows slower shutter speeds to be used, improving image brightness in low-light situations.

S. Shutter Limit: Adjusts the limit of the slow shutter speed.

Gain Limit: Controls the maximum level of camera sensor gain, which amplifies the image signal to make it brighter in low-light conditions.

High Sensitivity: On/Off toggle switch: When enabled, the camera increases sensitivity for better performance in low light.

Back Light: On/Off toggle switch: Compensates for backlighting, making the subject in front of bright backgrounds more visible.

Spot Light: On/Off toggle switch: Adjusting the camera's settings to handle high contrast caused by spotlights or intense lighting in specific areas.

AE Speed: Adjusts the speed of Auto Exposure (AE) response. Use the slider to control how quickly the camera adapts to changing light conditions (range: 1 to higher values).

EX-comp: On/Off toggle switch: Exposure compensation feature for fine-tuning the brightness of the image.

White Balance

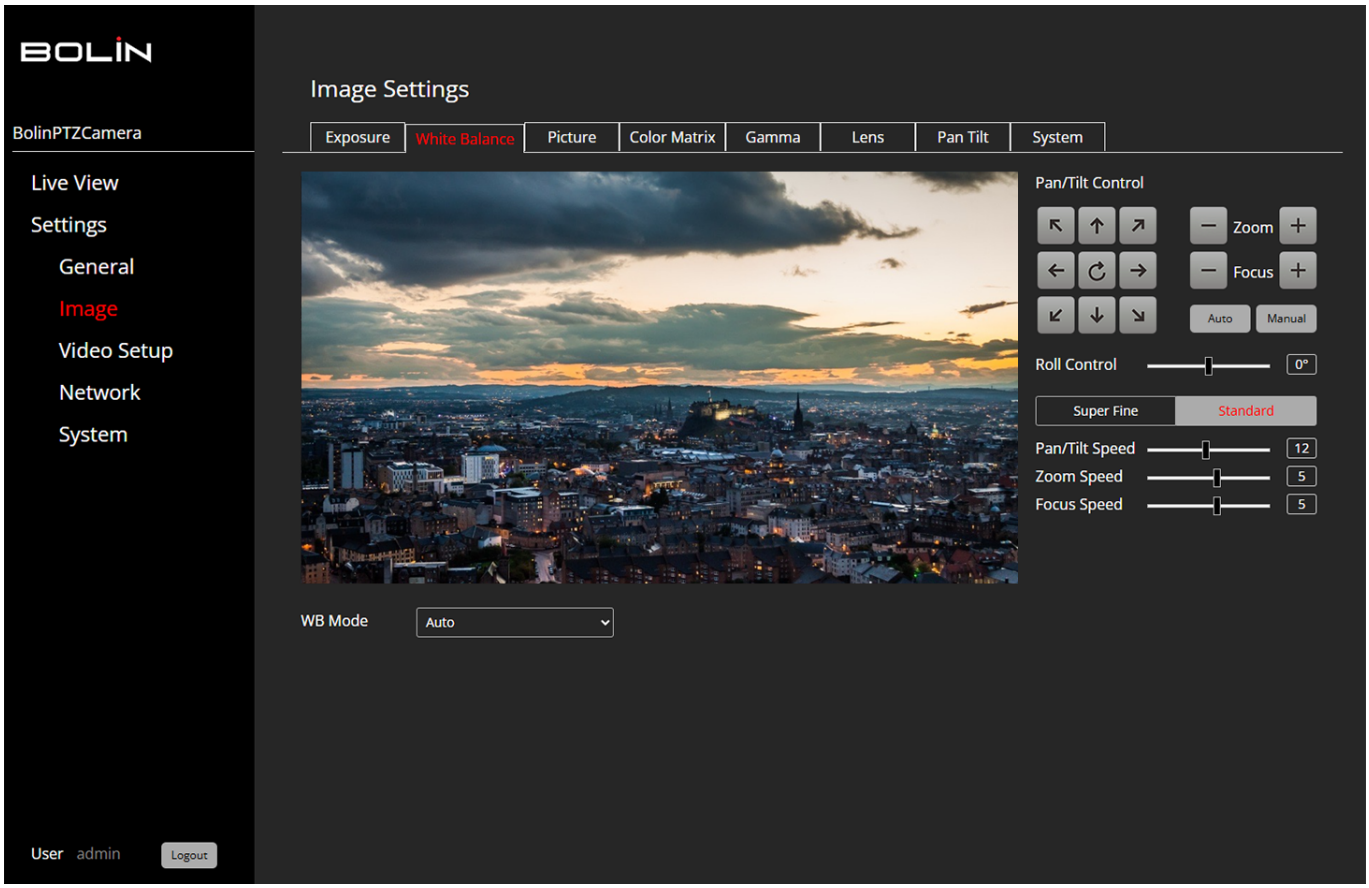

The White Balance menu is utilized for choosing the mode of white balance.

WB Modes include: **Auto, Indoor, Outdoor, OPW, ATW, User, Outdoor Auto, SVL Auto, SVL, SVLOutdoor Auto.**

Picture

The Picture page is to configure the various image parameters of the camera.

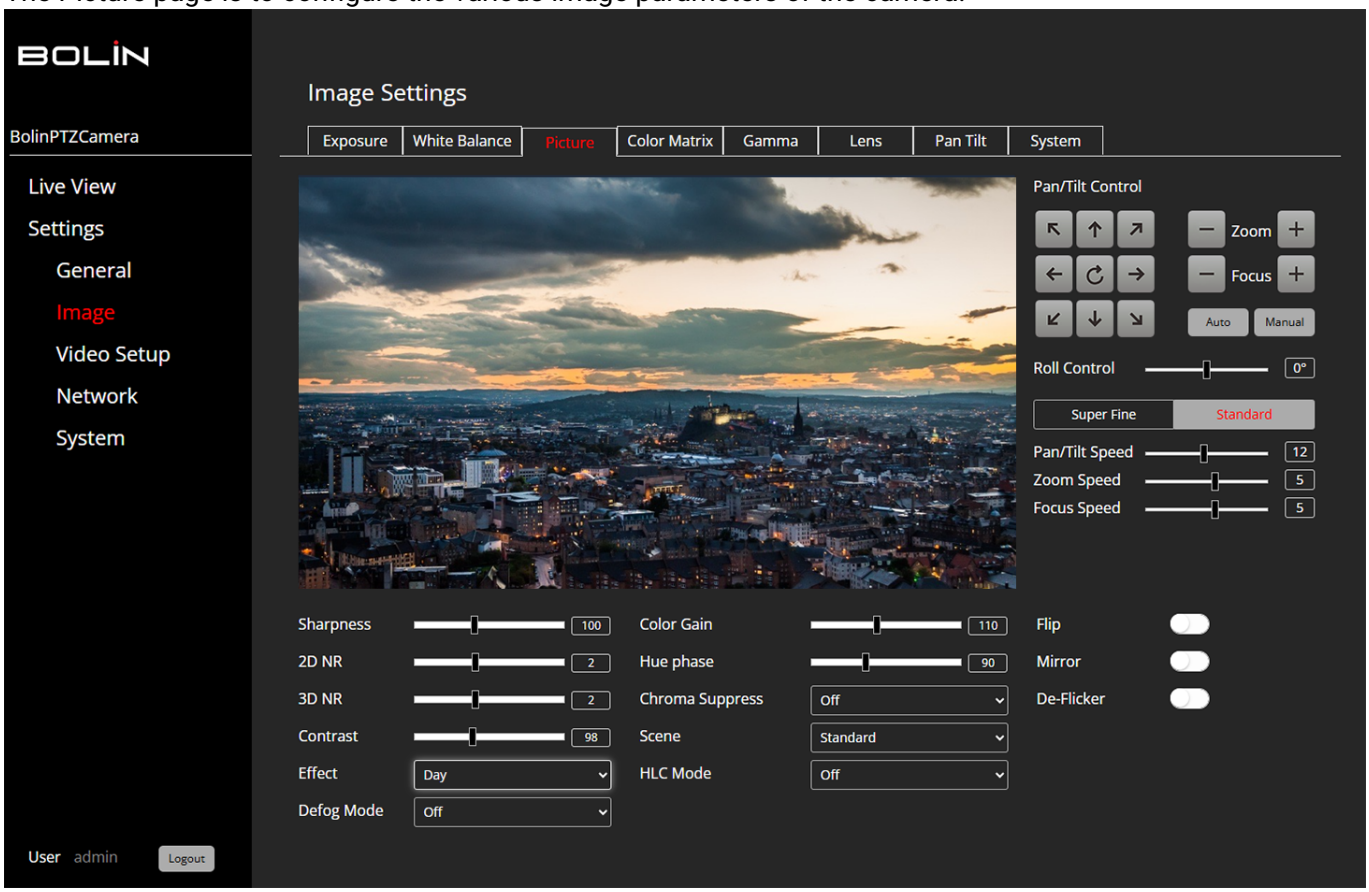

- **Sharpness:** Adjusts the sharpness of the image.
- **2D NR (Noise Reduction):**Reduces noise in the image through 2D noise reduction.
- **3D NR (Noise Reduction):** Reduces noise in the image using 3D noise reduction for enhanced quality in low-light or noisy environments.
- **Contrast:** Controls the contrast of the image.
- **Effect:** Changes the color temperature and tone of the image.
- **Color Gain:** Adjusts the intensity of colors in the image.
- **Hue Phase:** Adjusts the overall hue or color balance of the image.
- **Chroma Suppress:** Suppresses chroma (color) signals, reducing color noise.
- **Scenes:** Adjust the camera to various lighting environments, (default): General use.
- **HLC Mode (Highlight Compensation):** Reduces the intensity of bright areas to avoid overexposure.
- **Flip: On/Off toggle switch:** Flips the image vertically when enabled.
- **Mirror: On/Off toggle switch:** Mirrors the image horizontally when enabled.
- **Flicker: On/Off toggle switch:** Reduces flickering in video caused by certain types of artificial lighting.

Color Matrix

To fine-tune the color output of the PTZ camera by adjusting the Gain and Hue for six color channels: Magenta, Red, Yellow, Green, Cyan, and Blue.

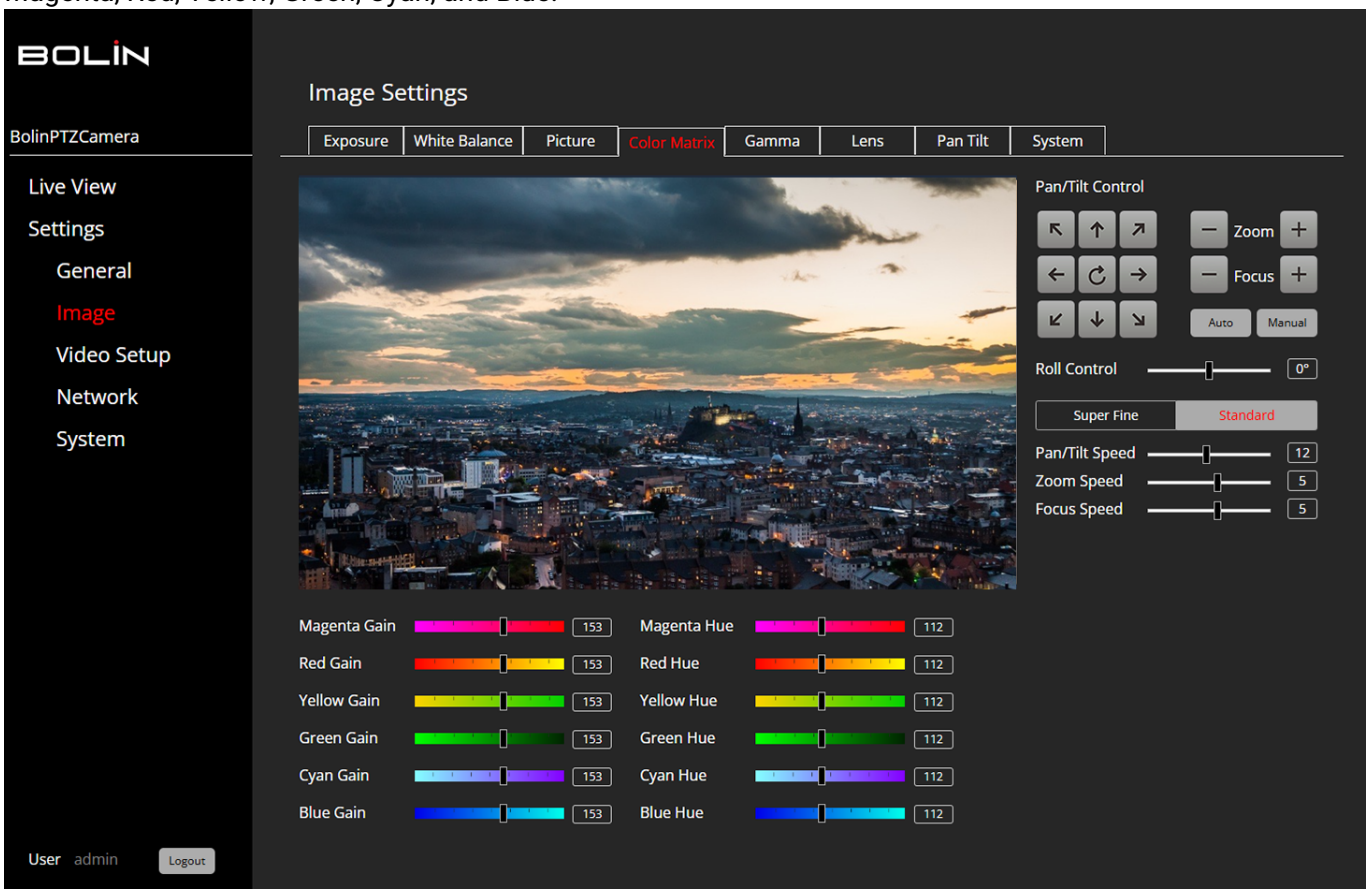

Gain (Left Sliders):

- Gain controls the intensity or saturation of each color in the image.
- The sliders range from minimum (left) to maximum (right) intensity, with a numeric value beside each

slider representing the current setting (default value is 153).

- Adjusting the gain will make the corresponding color either more prominent or subdued in the image.

Hue (Right Sliders):

- Hue adjusts the actual tone or shade of the color.
- The numeric value next to the hue sliders indicates the current hue level (default is 112), and you can slide left or right to make the hue warmer or cooler.
- This setting is useful for refining the exact color tone to better match the environment and lighting conditions.

Color Channels:

- **Magenta**: Balances the magenta tones. This is important for skin tones or color correction in magenta-heavy scenes.
- **Red**: Adjusts reds, which can affect skin tones, sunsets, or indoor lighting conditions.
- **Yellow**: Affects the yellows in the image, particularly in scenes with bright sunlight or artificial lighting.
- **Green**: Modifies green tones, ideal for outdoor shots or scenes with vegetation.
- **Cyan**: Adjusts cyan levels, which may enhance skies or water scenes.
- **Blue**: Controls blue tones, commonly adjusted for sky, water, or low-light conditions.

Clicking the **Default** button will reset all the Gain and Hue sliders back to their factory default values.

Gamma

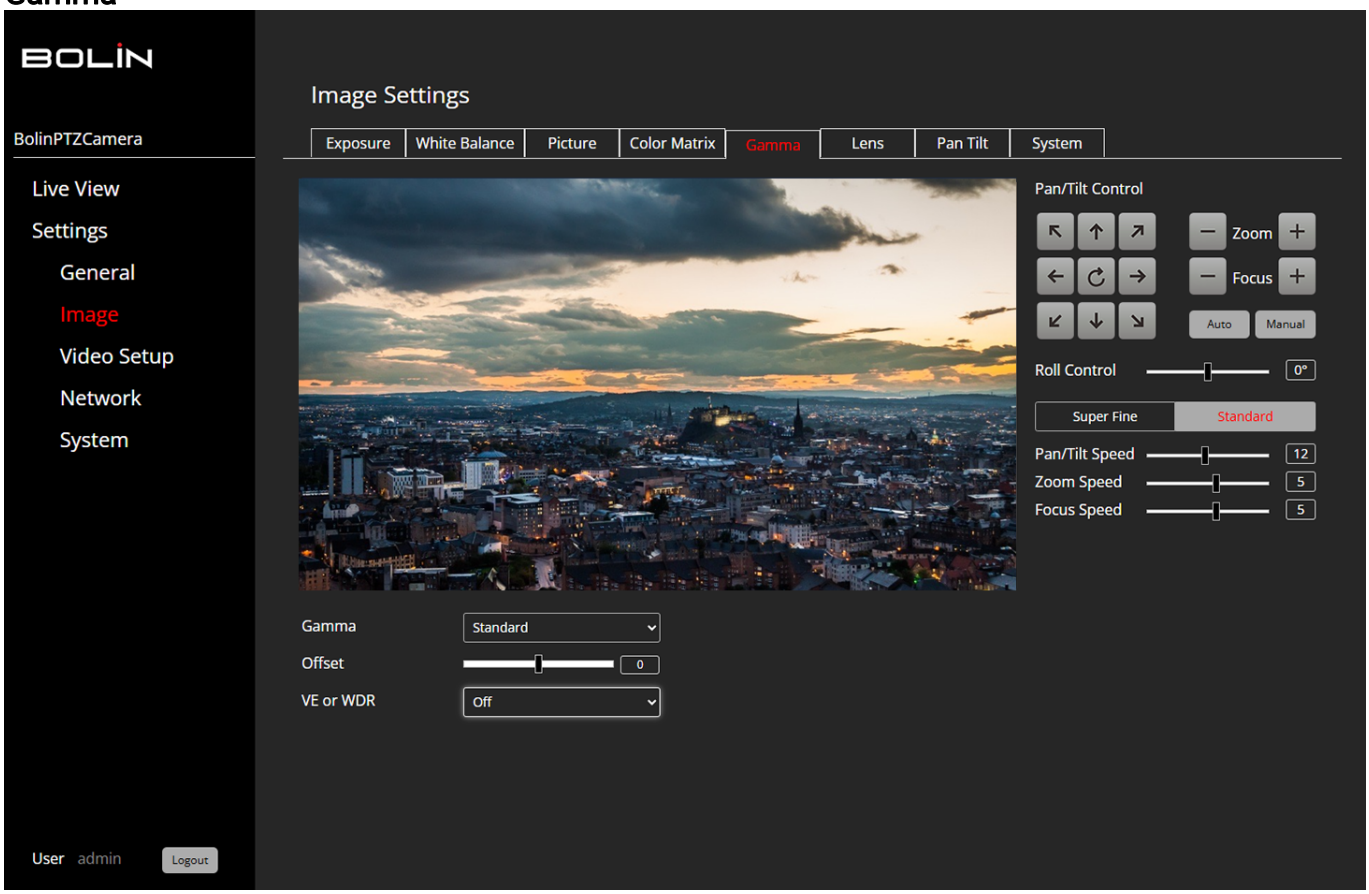

- **Gamma**: Setting Gamma in standard mode is equivalent to setting it in movie mode.
- **Straight**: This option permits the user to select a straight GAMMA curve.

- **Pattern**: This option allows the user to select a gamma curve from 512 patterns stored in the camera. The pattern can be specified using the PATTERN and PATTERN FINE settings. The PATTERN setting defines the first two digits of the pattern number, while PATTERN FINE defines the last digit.
- **Offset**: The user can select the offset of the output level of gamma curves. They can choose a value from −64 to 0 to +64.
- **VE or WDR (Visibility Enhancer or Wide Dynamic Range)**: This function in the camera adjusts according to the imaging scene. It brightens the darker areas of an image and automatically corrects brightness and contrast to display the brighter parts.
- **Brightness Level**: This feature allows the user to adjust the brightness of the camera's display.
- **Brightness COMP. (Brightness Compensation)**: This feature allows users to override exposure settings picked by the camera's light meter to darken or brighten images before they are captured.
- **COMP. Level (Compensation Level)**: This setting allows the user to adjust the camera's exposure settings to either brighten or darken the image.

Lens

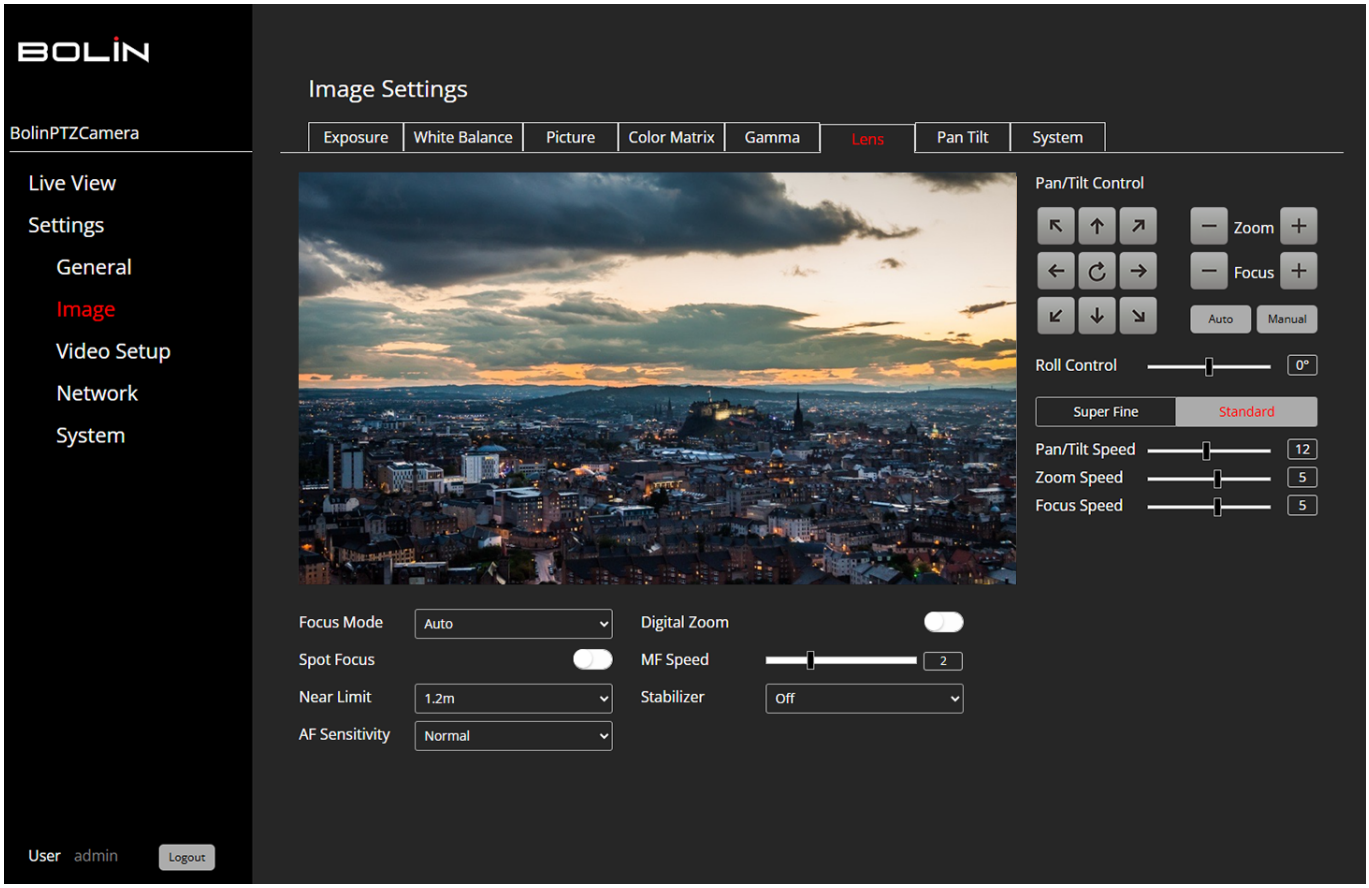

AF Mode: Allows selection of the autofocus mode based on shooting conditions.

- **Spot Focus**: Enables selection of a specific area in the frame for autofocus priority.
- **Near Limit**: Sets the minimum distance for the camera's focus.
- **AF Sensitivity**: Adjusts the speed of autofocus response to scene changes.
- **Zoom Ratio OSD**: Displays the zoom ratio on the screen.
- **Digital Zoom**: Offers digital magnification of the image.

- **MF Speed**: Controls the speed of manual focus adjustments.
- **Stabilizer**: Designed to minimize camera shake and ensure smooth, clear images. This feature can be activated by selecting either the Super or Super+ options. The stabilizer is set to Super it provides an elevated level of steadiness, ensuring superior video quality even in challenging conditions. When the Stabilizer is set to Super+, it offers an even more enhanced level of stabilization, which is particularly useful in situations where there is significant camera movement, such as when shooting in a moving car or in high-wind conditions.

Pan Tilt

The Pan Tilt page is utilized to designate the desired mode for pan, tilt, and zoom operations.

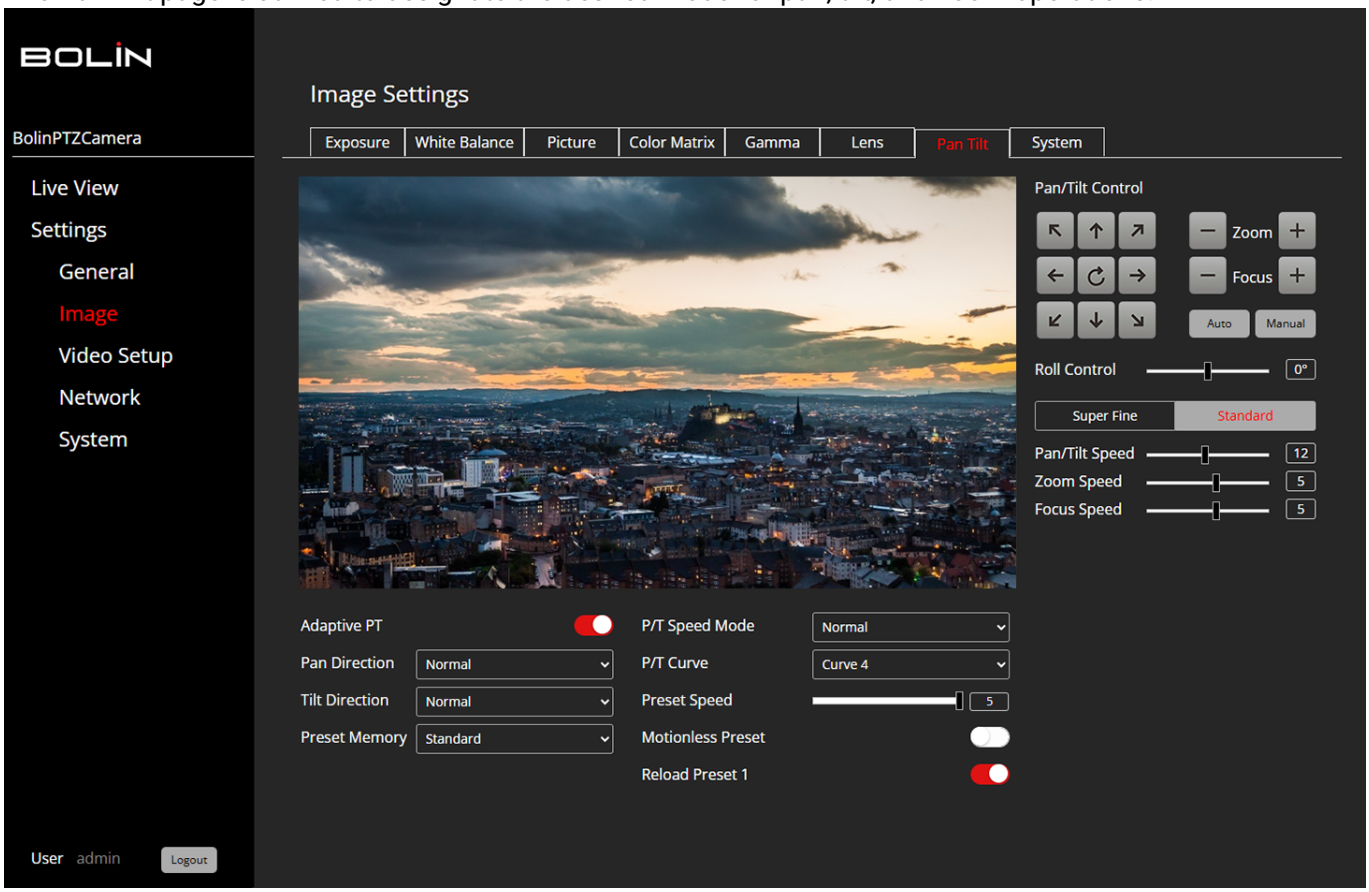

- **Adaptive PT:** When enabled, the Pan Tilt speed will adapt according to the zoom range. Activating this feature allows the Pan and Tilt speed to adjust automatically to different zoom ratios. For instance, as the zoom ratio increases, the Pan/Tilt speed decreases correspondingly.
- **Pan Direction:** This setting adjusts the camera's horizontal orientation, with options for either normal or inverted left and right directions.
- **Tilt Direction:** This setting controls the camera's vertical orientation, with options to choose between normal or inverted for upward and downward movements.
- **Preset Memory:** This feature allows the PTZ camera to save specific pan, tilt, and zoom coordinates.
- **Preset Speed:** Adjust the Preset Speed value within a range of 0 to 5 to modify the speed of the preset movements. The speed increases as the value goes from low (0) to high (5).
- **Motionless Preset:** When the motionless preset is ON, the video image will not be shown during the transition to the designated preset location.

- **Reload Preset 1:** Enable this option to automatically switch to the default preset when powering on the camera.

System

The System page is to configure the various communications parameters of the camera.

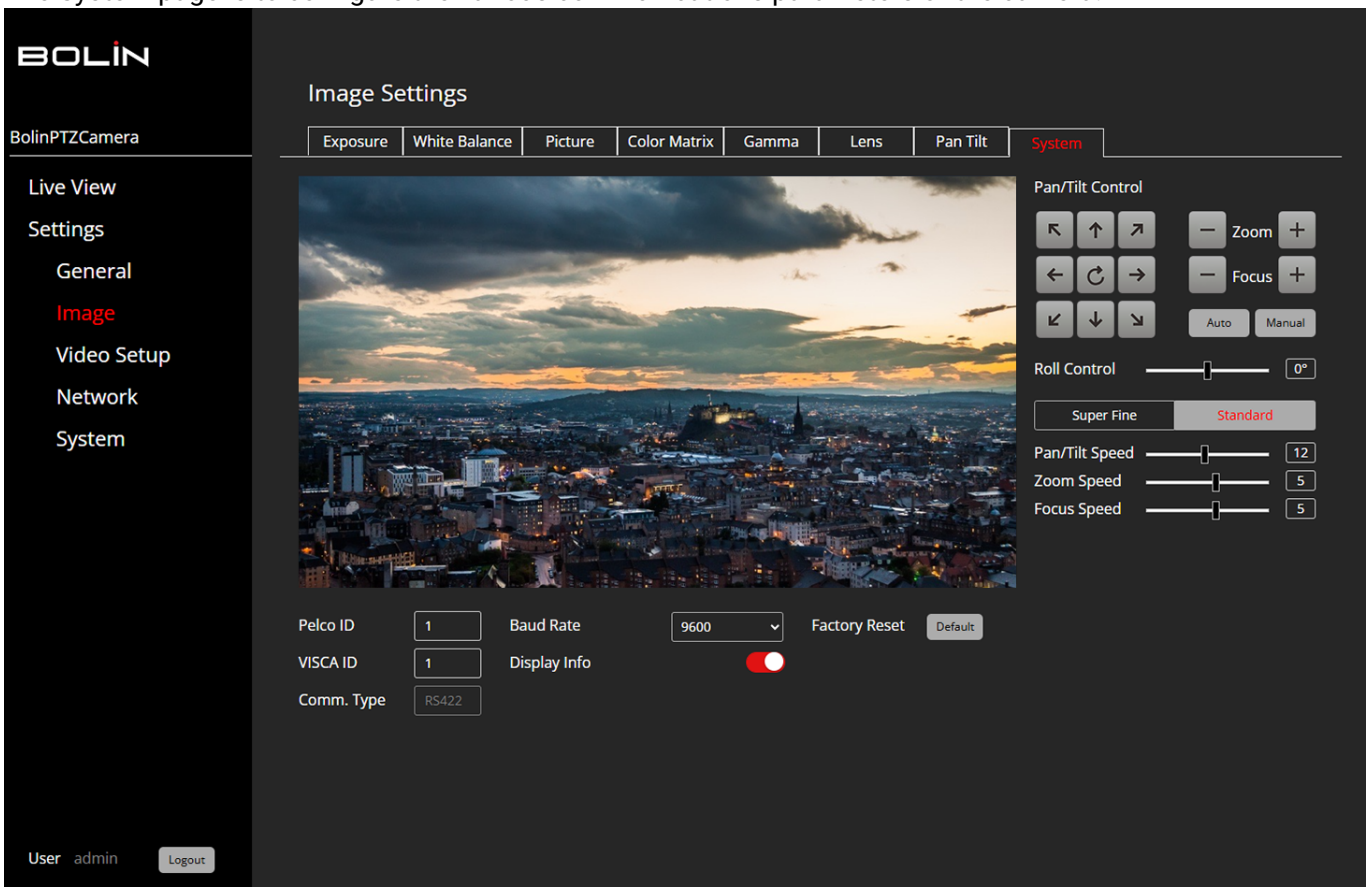

- **Pelco ID:** When utilizing RS485 (PELCO P/D) control, assign the Camera ID to the specific address you wish to control. The value for this setting can range from 1 to 255.
- **VISCA ID:** When utilizing RS422 (VISCA) control, assign the Camera ID to the specific address you wish to control. The value for the setting can range from 1 to 7.
- **Comm Type:** Describes communication type.
- **Baud Rate:** The rate of data transfer, measured in bits per second.
- **Display Info:** When this setting is enabled, a message displaying the camera's configuration will appear on the screen for approximately 10 seconds each time the camera is powered on or restarted.
- **Factory Reset:** Resetting all the above settings to factory default.

Video Setup

Streaming Server

From the **Streaming Server** tab, users can set up an IP stream to be sent from the camera to any destination via the network connection. This camera is capable of sending up to IP stream via RTSP, RTMP, SRT, MPEG-TS UDP, and MPEG-TS RTP.

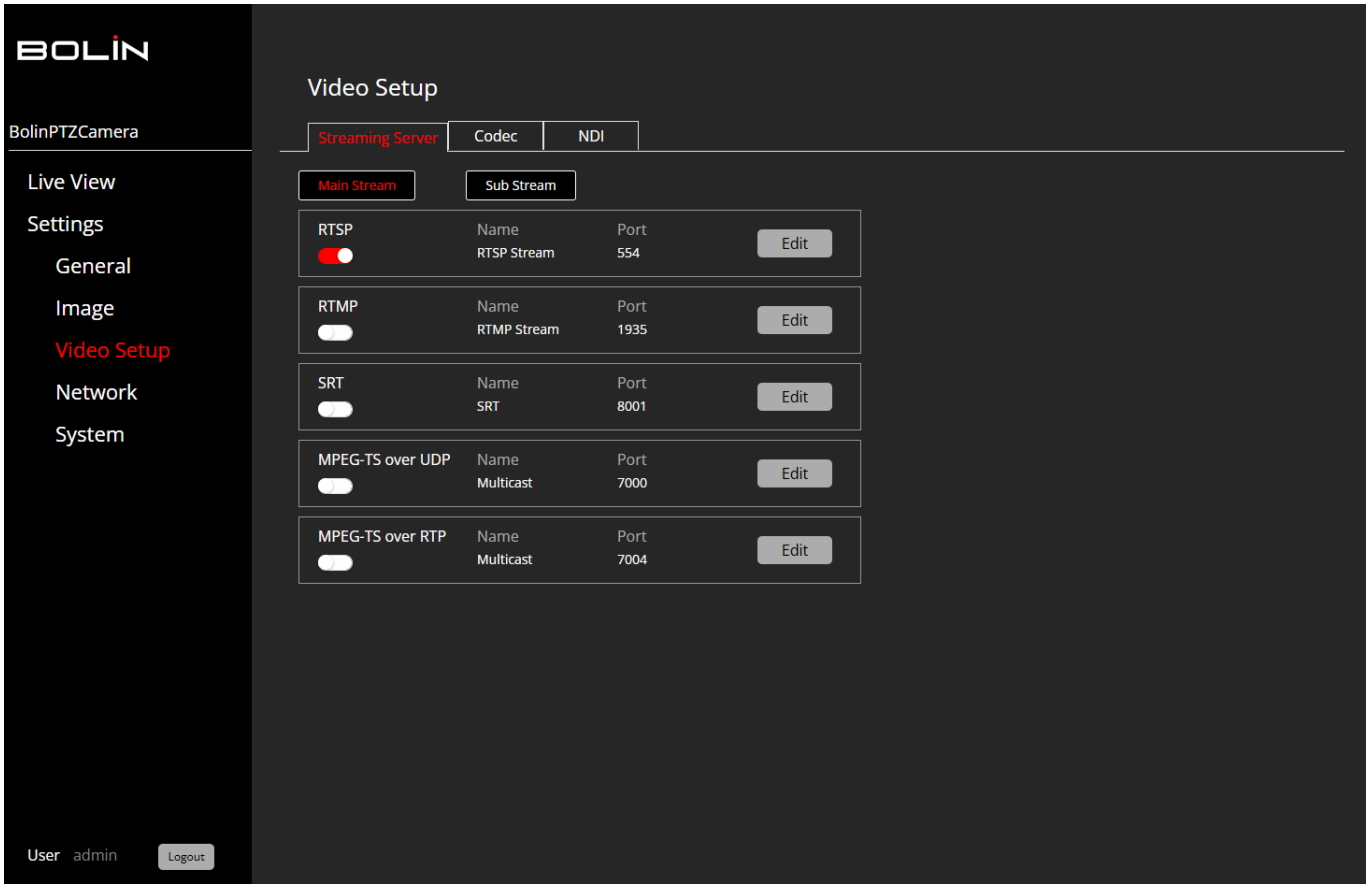

To stream video from the camera to a destination, follow these steps:

1. Select the desired stream type, either "Main Stream" or "Sub Stream." Both streams carry the same video signal but can be configured with different codecs and resolutions under the Codec tab.
2. Enable the selected stream by toggling the button below the stream type. The stream is active when the slider appears red.
3. Click the "Edit" button corresponding to the chosen stream type. Enter the necessary stream details, such as Stream Key, URL, Stream Mode, and Max Connections. Optionally, assign a name to the stream based on its destination, title, or another identifier.
4. The Stream URL appears in red at the bottom of the RTSP and SRT stream settings. Copy and paste this link into a video viewer, ingest server, or other streaming platform to access the stream on the network.

Streaming Server & Port Number	Streaming Server Connection Strings
RTSP port: **554**	`rtsp://<IP address>:<RTSP port>/media/video<1/2>`
SRT port: **1000**	`srt://<IP address>:<SRT port>`
RTMP port: **1935**	`RTMPstreamURL/Key` ***NOTE***: Before streaming via RTMP, log in to the video streaming platform and obtain the **RTMP stream URL and key**. Enter these details into the RTMP settings page on the camera's IP web interface to configure the stream.
UDP port: **7000**	`udp://@<IP address>:<UDP port>`
RTP port: **7004**	`rtp://@<IP address>:<RTP port>`

When configuring the streaming connection, a **username and password** can be included in the stream URL for authentication. This applies to **RTSP, SRT,** and other supported streaming protocols. The format for including credentials is as follows:

- **RTSP:**
  `rtsp://<username>:<password>@<IP address>:<RTSP port>/media/video<1/2>`
- **SRT (Caller Mode with Passphrase Authentication):**
  `srt://<IP address>:<SRT port>?passphrase=<password>`

By default, **authentication is disabled** for RTSP. However, users can enable or disable authentication under the **"Edit"** section of the RTSP settings in the camera's web interface. When enabled, the correct credentials must be included in the stream URL to establish a successful connection.

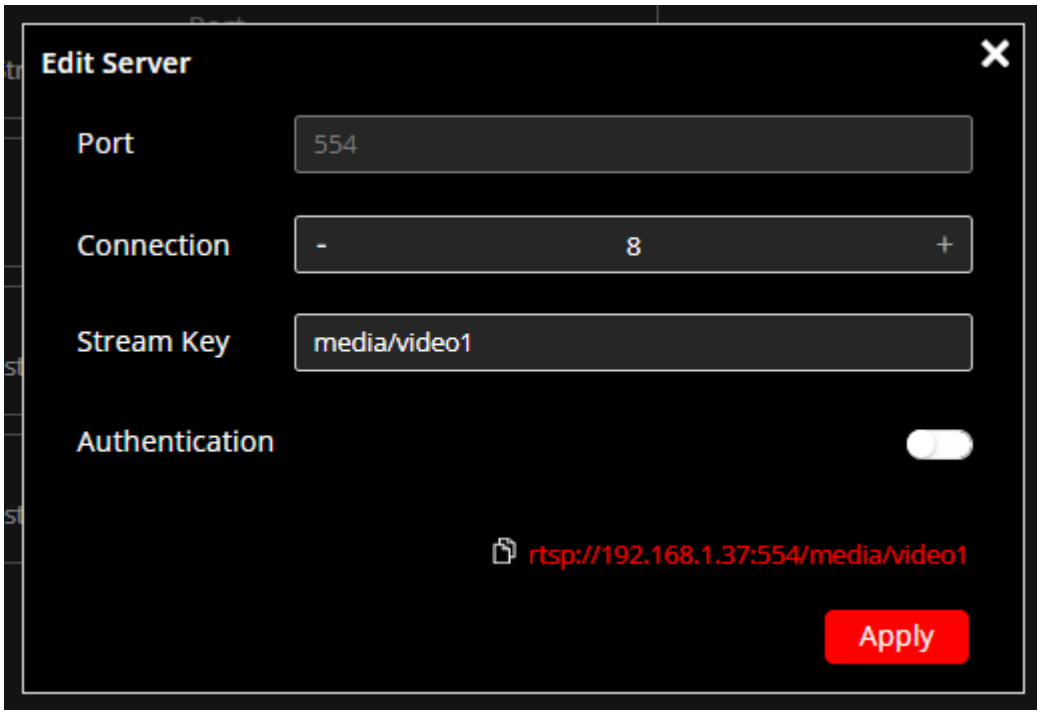

Ensure that the correct credentials are entered in the stream URL to establish a successful connection when authentication is enabled.

H.265 Streaming Requirements
To enable the **H.265** feature on the camera, the following conditions must be met:

- A **Bolin Decoder (EG40N)** must be used.
- Only **RTSP or SRT** streaming modes are supported.
- The **Main Stream** must be set to **H.265**.

Codec
The **Codec** tab provides configuration options for encoding video streams from the camera. Settings for both the Main Stream and Sub Stream can be adjusted independently to optimize video quality, compression, and bandwidth usage.

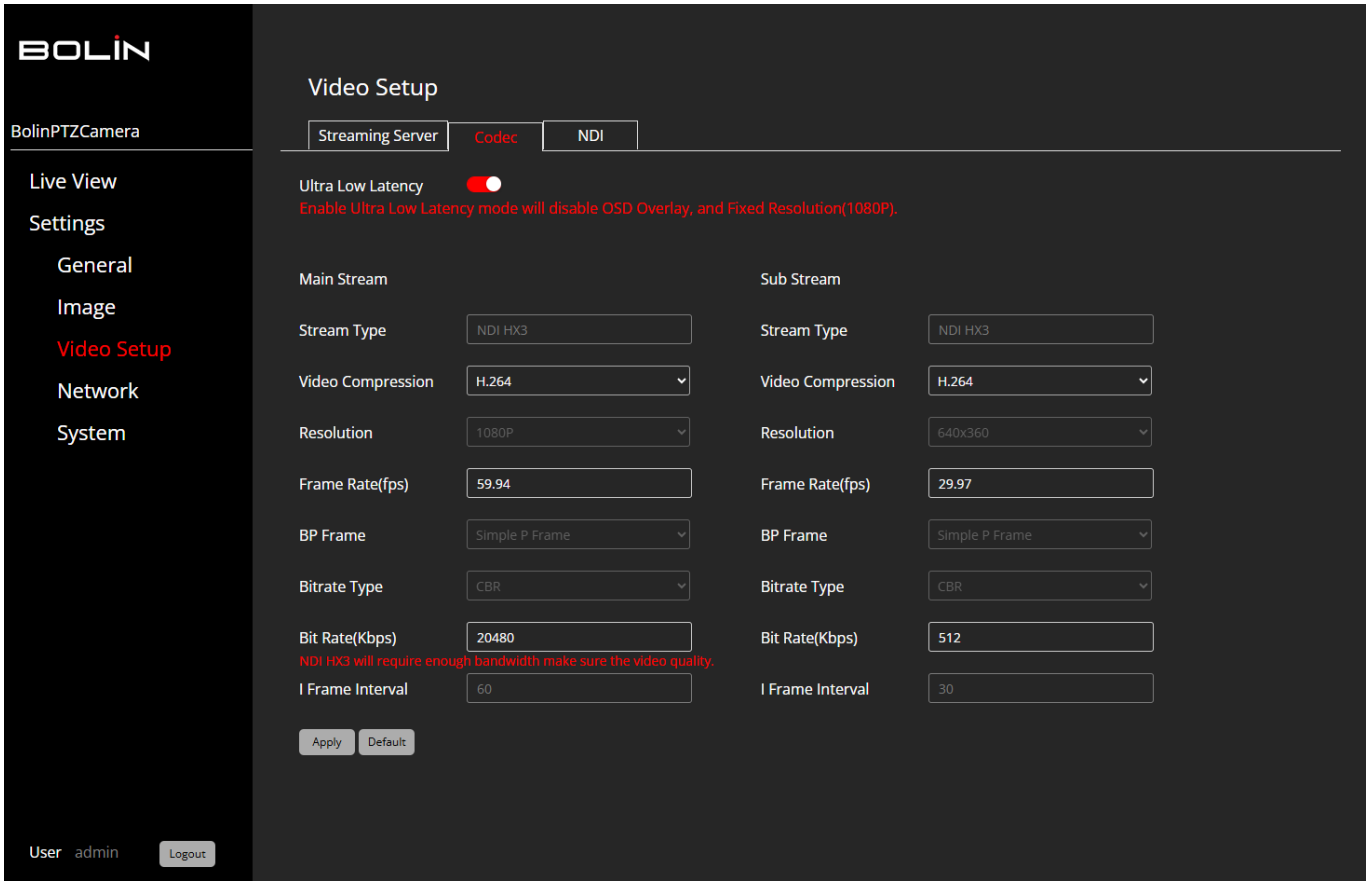

- **Stream Type:** Defines the operating mode of the stream.
- **Video Compression:** Selects the encoding format (e.g., H.264, H.265) to balance quality and efficiency.
- **Resolution:** Determines the output video resolution. The Main Stream supports higher resolutions, while the Sub Stream is typically used for lower-bandwidth applications.
- **Frame Rate (fps):** Sets the number of frames per second, impacting video smoothness and bandwidth usage.
- **BP Frame:** Configures the type of **B-frames** and **P-frames** used in encoding for compression efficiency.
- **Bitrate Type:** Choose between **CBR (Constant Bit Rate)** for stable bandwidth usage or **VBR (Variable Bit Rate)** for adaptive quality.
- **Bit Rate (Kbps):** Defines the data rate for the selected stream. Higher values improve quality but require more bandwidth.
- **I Frame Interval:** Sets the interval at which keyframes (I-frames) are generated, affecting video recovery and compression performance.

> **NOTE:** Enabling Ultra Low Latency Mode will disable the OSD overlay and lock the resolution at 1080P, as indicated in red text above the settings.

These parameters should be configured based on network capacity, video quality requirements, and streaming conditions. Click **Apply** to save changes or **Default** to reset to factory settings.

The **NDI** tab provides configuration options for enabling and managing NDI® (Network Device Interface) streaming.

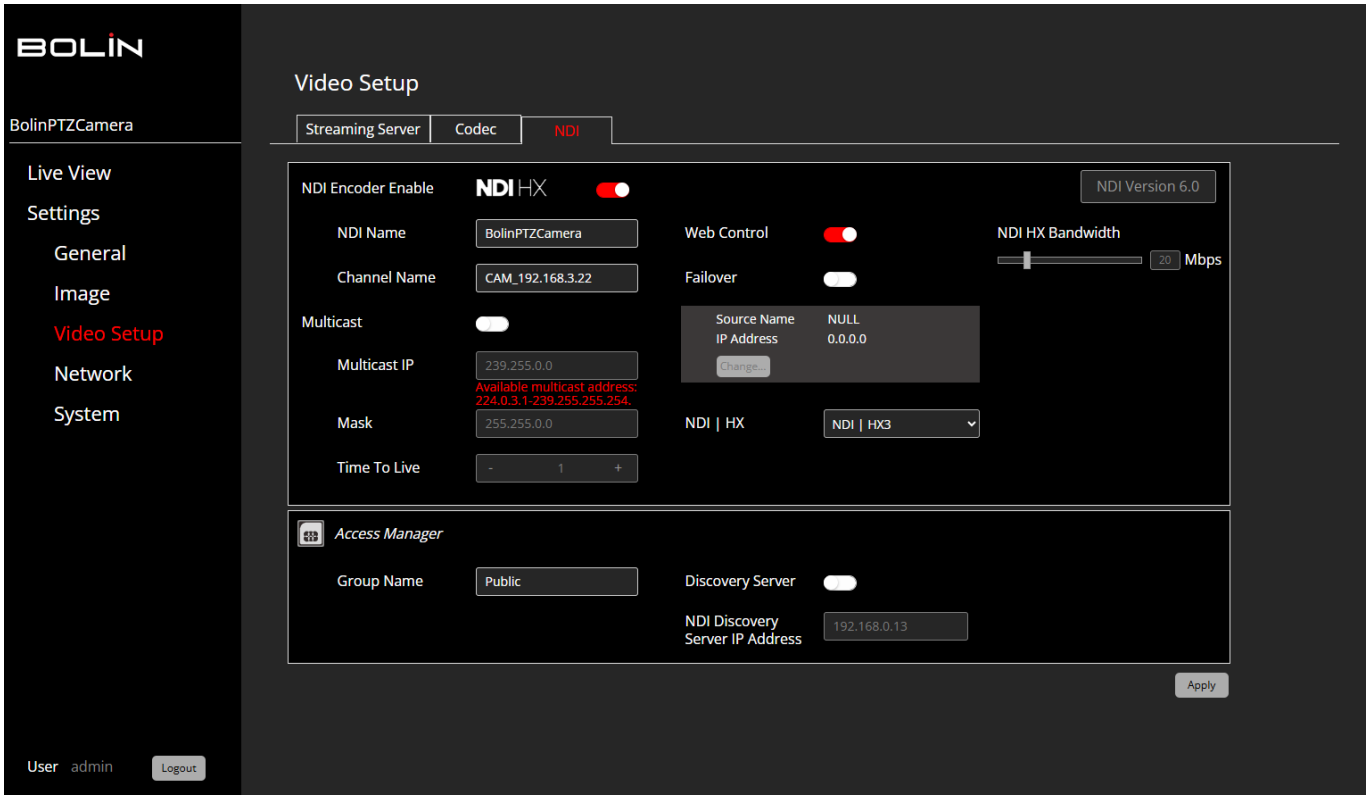

- **NDI Encoder Enable:** Toggle Switch: Enables or disables NDI functionality on the camera.
- **NDI Version:** Displays the current NDI version in use (e.g., NDI Version 6.0).
- **NDI Name:** The camera's unique identifier for NDI discovery on the network. Default example: EXU230NX.
- **Channel Name:** The assigned name for the NDI video stream. Example: CAM_192.168.1.37.
- **Multicast Toggle**: Enables or disables multicast streaming.
- **Multicast IP Address**: If multicast is enabled, this field must be configured with a valid multicast address (range 224.0.3.1 - 239.255.255.254).
- **Mask**: The subnet mask for the multicast stream (default: 255.255.0.0).
- **Time To Live (TTL)**: Defines how many network hops the multicast stream can take before expiring.
- **Web Control Toggle Switch:** Enables or disables web-based control for NDI HX.
  NDI HX Bandwidth Slider: Adjusts the bandwidth for NDI HX streaming, allowing you to set the desired Mbps value (default: 62 Mbps).
- **Failover Mode Toggle Switch:** When enabled, provides a backup NDI source in case of connection issues.
- **Source Name & IP Address**: Displays current source name and IP address. If no source is assigned, it will show as NULL / N/A.
- **NDI| HX Format Selection Dropdown Menu**: Allows switching between NDI | HX2 and NDI | HX3 for different streaming protocols.
- **Group Name**: Defines the NDI access group (default: Public).
- **Discovery Server Toggle**: Enables or disables the use of an NDI Discovery Server.
- **NDI Discovery Server IP Address**: If a discovery server is enabled, this field must be configured with the appropriate IP address.

- Click "**Apply**" to save and activate changes.

> **NOTE:**
> - Ensure your camera and NDI devices are on the same network subnet.
> - When using Multicast, confirm network switches support multicast routing.
> - Adjust NDI HX Bandwidth based on network capacity to optimize streaming performance.
> - NDI Discovery Server is useful for managing multiple NDI sources in large network environments.

IP Resolutions
NDI OFF Mode: RTMP/RTSP/SRT/ ONVIF
1080P60 1080P59.94 1080P50 1080P30 1080P29.97 1080P25 1080P24 1080P23.98 720P60 720P59.94 720P50

HX2 Mode:
1080P60 1080P59.94 1080P50 1080P30 1080P29.97 1080P25 1080P24 1080P23.98 720P60 720P59.94 720P50

HX3 Mode:
1080P50 1080P60

Network

The **Network** tab provides settings for configuring the camera's IP network connectivity. It allows the selection of DHCP or Static IP addressing, along with fallback settings to ensure reliable network access.

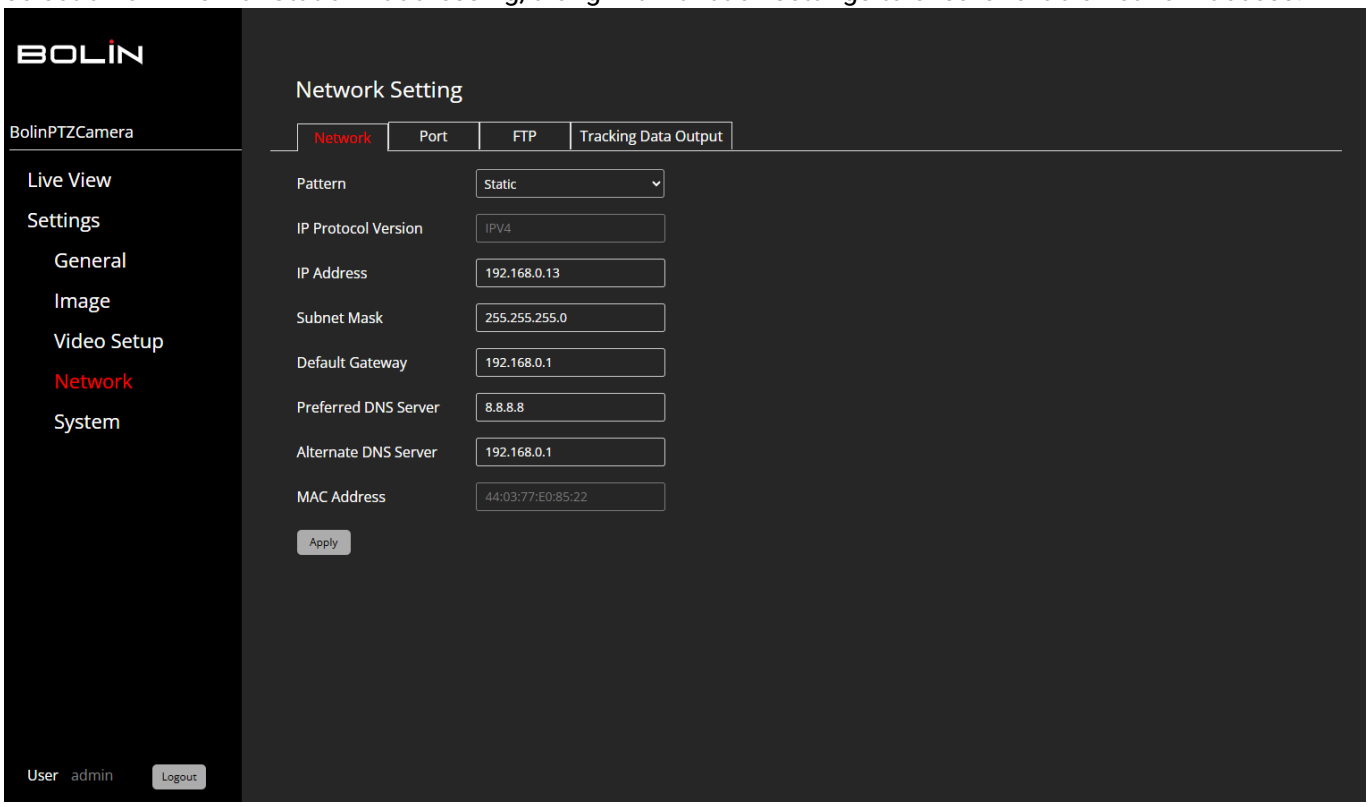

- **Pattern:** Select between **DHCP** (automatically assigns an IP address from the network) or **Static IP** (manually configured).
- **IP Protocol Version:** Displays the IP version in use (IPv4).

- **IP Address:** Shows the current assigned IP address of the camera. When DHCP is enabled, this is automatically assigned by the network.
- **Subnet Mask:** Defines the network segment the camera is part of.
- **Default Gateway:** Specifies the gateway used for external network communication.
- **Preferred DNS Server / Alternate DNS Server:** Configures the DNS servers for resolving domain names.
- **MAC Address:** Displays the camera's unique hardware address.

DHCP Fallback Settings:
When DHCP is selected, the camera will attempt to obtain an IP address dynamically. If unsuccessful within the specified **timeout period**, the camera will revert to the

DHCP Fallback settings, using:

- **Fallback IP Address:** Default IP address used when DHCP fails.
- **Subnet Mask & Gateway:** Defines the fallback network settings.
- **Timeout:** Duration (in seconds) before switching to the fallback IP.

> **NOTE:** Click **Apply** to save any changes. Configuring network settings correctly ensures stable connectivity and remote access to the camera.

FTP tab of a device's configuration interface. The settings allow users to enable or disable FTP functionality and configure an FTP server for storing snapshots or other data.

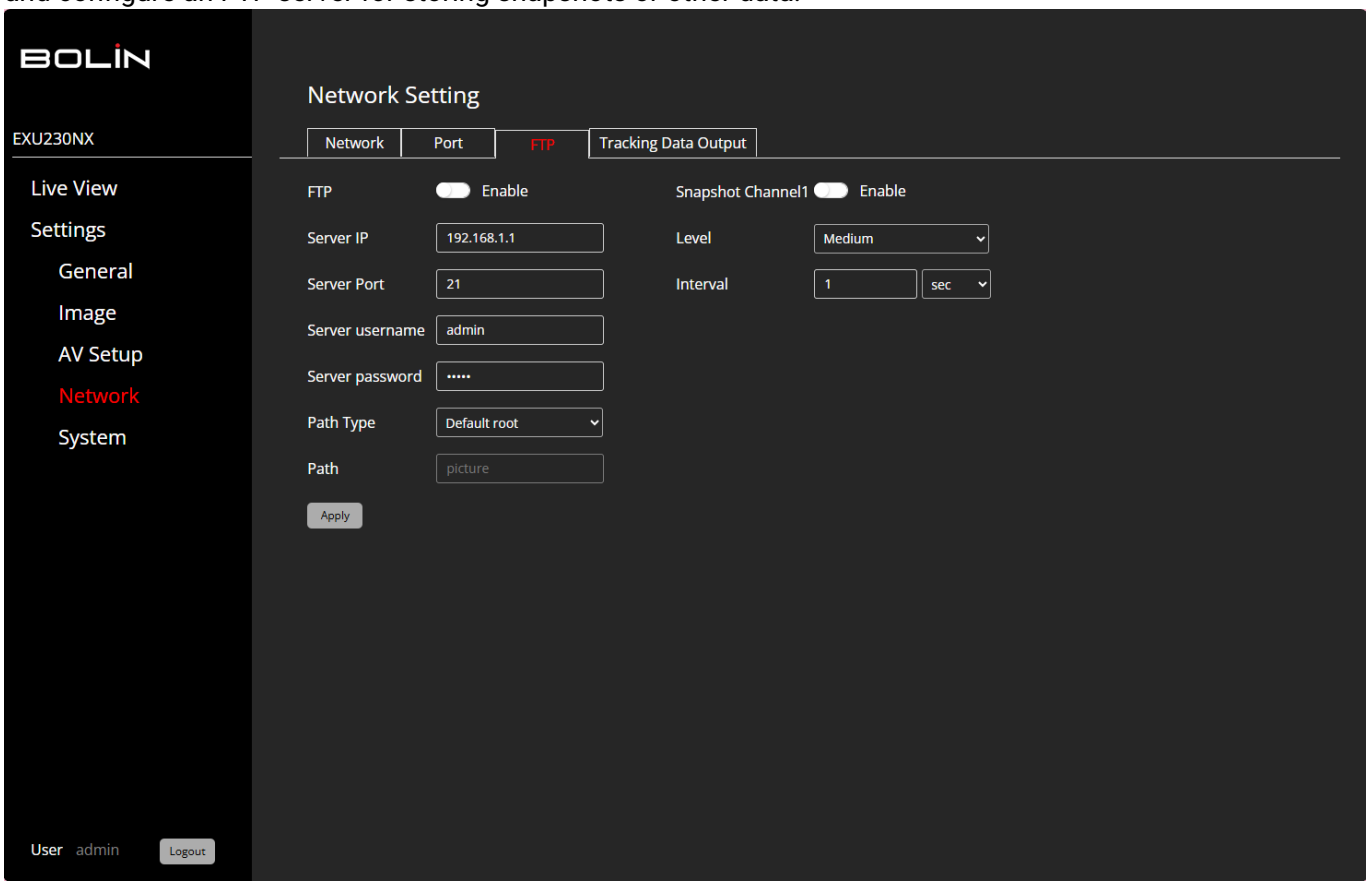

Enable the FTP server. Enter the IP address of the FTP server into the 'Server IP' field. Enter the FTP server's port number into the 'Server Port' field. This should match the port configured on the FTP server, typically port 21. Enter the FTP server's username and password into the 'Server Username' and 'Server Password' fields, respectively. These credentials should match those configured on the FTP server. Choose the 'Path Type' and 'Path' where you want the snapshot to be saved on the FTP server.

> **NOTE:** Click **Apply** to save any changes. Configuring network settings correctly ensures stable connectivity and remote access to the camera.

The **Port** tab manages network communication ports for various camera functions. These ports facilitate streaming, remote control, and third-party software integration. Proper configuration ensures seamless operation across different platforms.

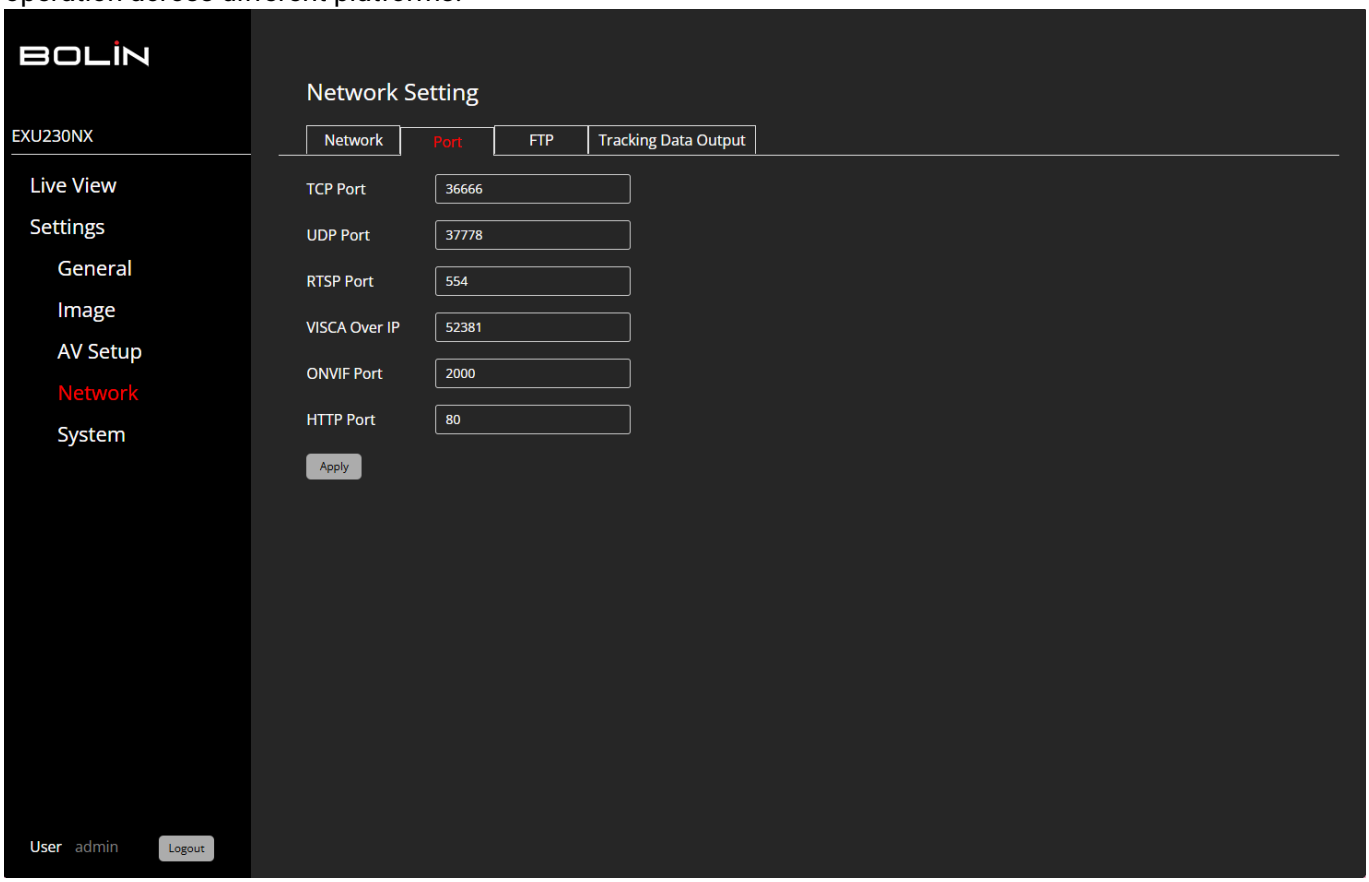

TCP Port: Used for general network communication and camera control.
UDP Port: Handles UDP-based data transmission, commonly used for real-time streaming with low latency.
RTSP Port: Specifies the **RTSP (Real-Time Streaming Protocol)** port, which enables video streaming to compatible media players and software. Default is **554**.
VISCA Over IP Port: Defines the port for **VISCA over IP**, allowing remote camera control via the VISCA protocol. Default is **52381**.
ONVIF Port: Sets the port for **ONVIF (Open Network Video Interface Forum)** communication, enabling integration with ONVIF-compliant devices and software. Default is **2000**.
HTTP Port: Determines the port used for web-based access to the camera's interface. Default is **80**.

DHCP Fallback Settings:
When DHCP is selected, the camera will attempt to obtain an IP address dynamically. If unsuccessful within the specified **timeout period**, the camera will revert to the

DHCP Fallback settings, using:
Fallback IP Address: Default IP address used when DHCP fails.
Subnet Mask & Gateway: Defines the fallback network settings.
Timeout: Duration (in seconds) before switching to the fallback IP.
Tracking Data Output tab allow users to configure UDP-based tracking data transmission for external applications or systems.

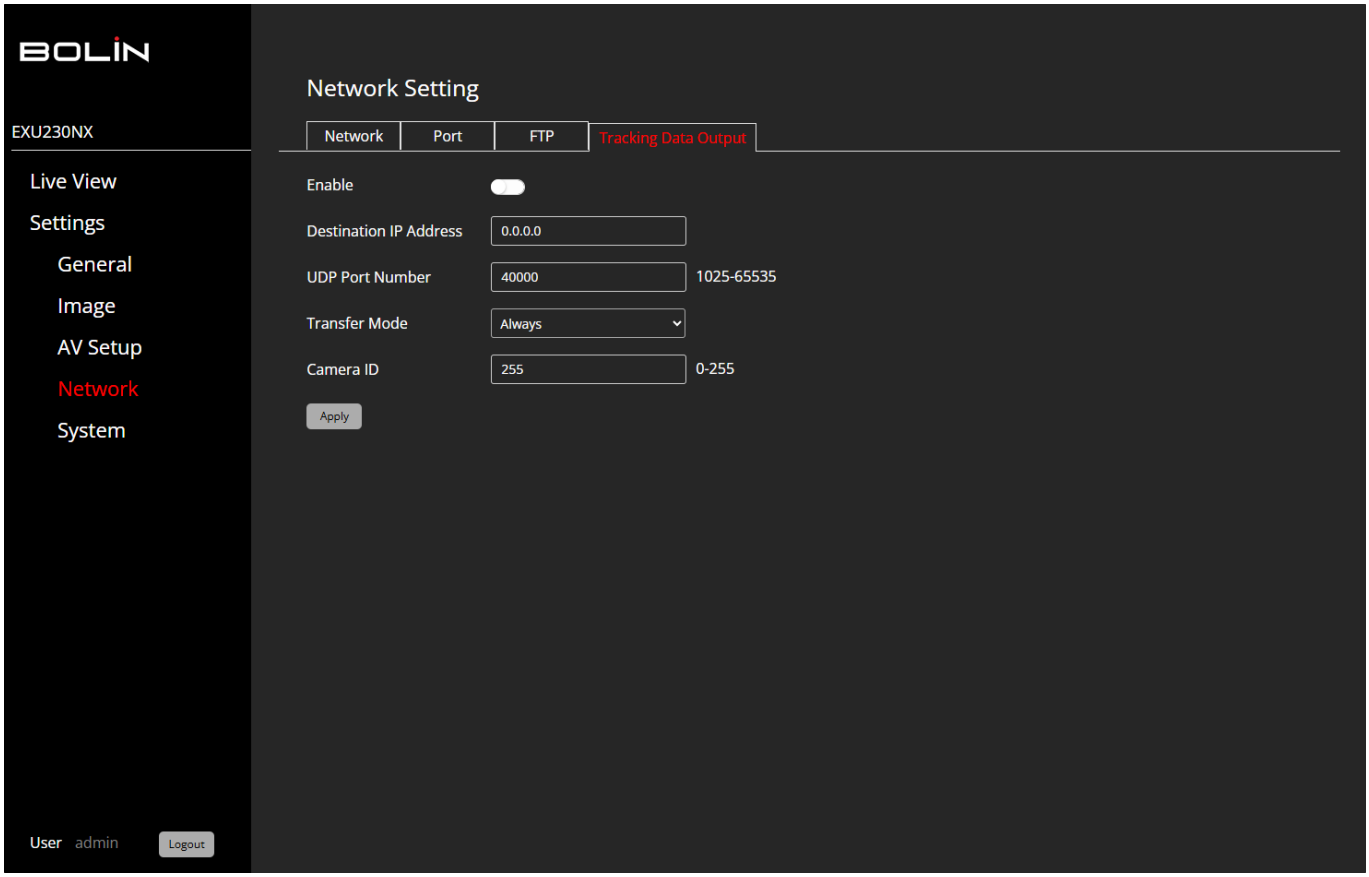

Enable Tracking Data Output: Toggle the switch at the top to **Enable** tracking data output. Once enabled, you'll be able to configure the rest of the settings.

- **Destination IP Address**: Input the IP address where the tracking data will be sent.
- **Set UDP Port Number**: Input the **UDP Port Number** through which the data will be transmitted. Valid range: **1025 - 65535**
- **Transfer Mode**: Select how often the tracking data should be sent.
- **Camera ID**: To identify the camera when sending tracking data. Values between **0 - 255**, and the default is **255**.

System

The **Firmware** tab displays the current firmware version of the camera.

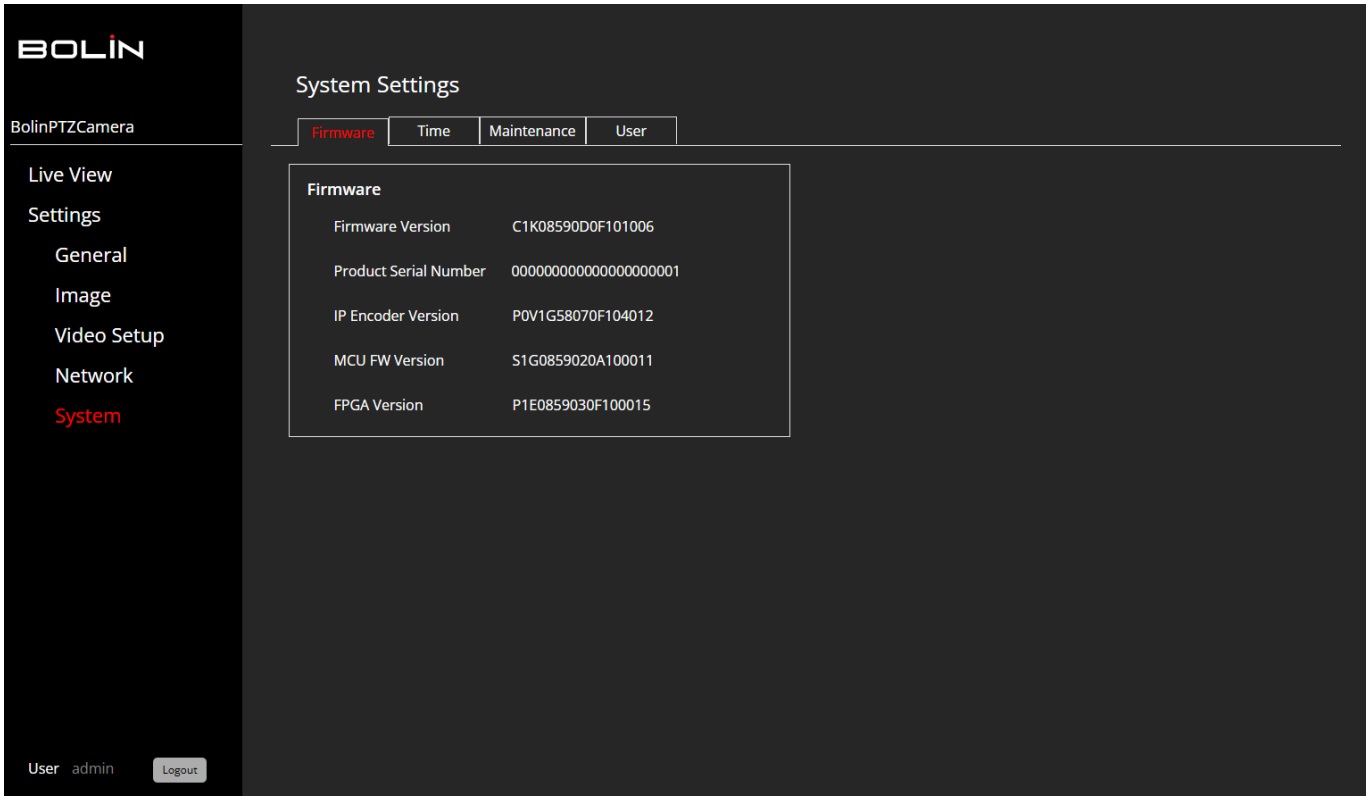

Time

On this page, users can configure the date and time settings of the camera.

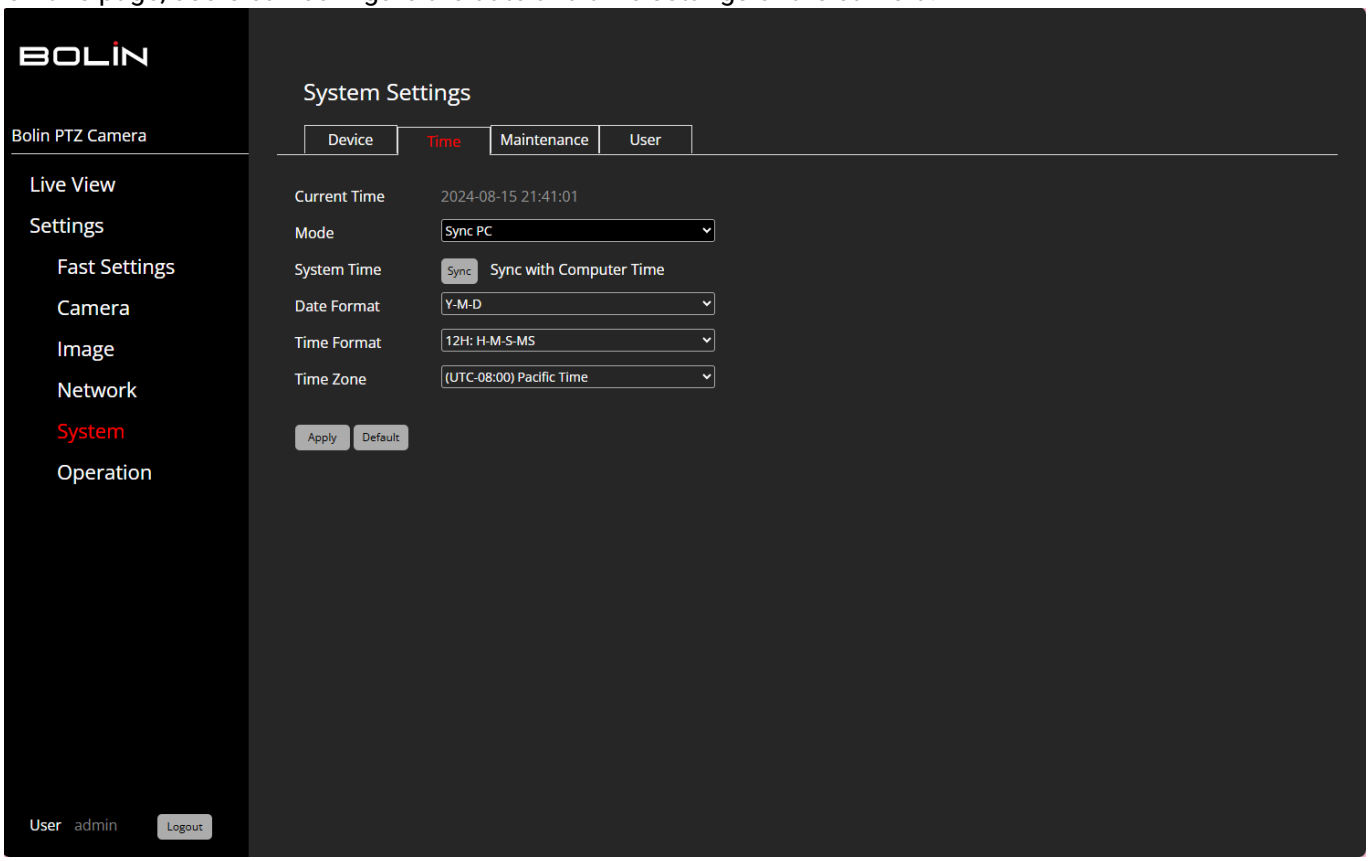

- **Date Format:** Users have the option to set the date format as either Y-M-D or D-M-Y.
- **Time Format:** Users have the option to set the time as either a 12- or 24-hour clock and whether it is displayed with or without milliseconds. (4 Options - 24H: H-M-S; 24H: H-M-S-MS; 12H: H-M-S; 12H H-M-S-MS)

- **Time Zone:** Allows you to set the camera to the time zone in which you are currently located.
- **PC Time Sync:** Allows your camera to synchronize its internal clock with the clock on your computer.
- **Network Time Sync:** Check this box to have the camera synced with an NTP (Network Time Protocol) Server. If using this option, enter the URL of an NTP server in the highlighted field.
- **Time Sync Server:** Input the time sync server address.
- **Port:** Server address, port number.
- **Refresh:** Select refresh time option is 10 Min, 30 Min, 1 Hour, 1 Day.

Maintenance

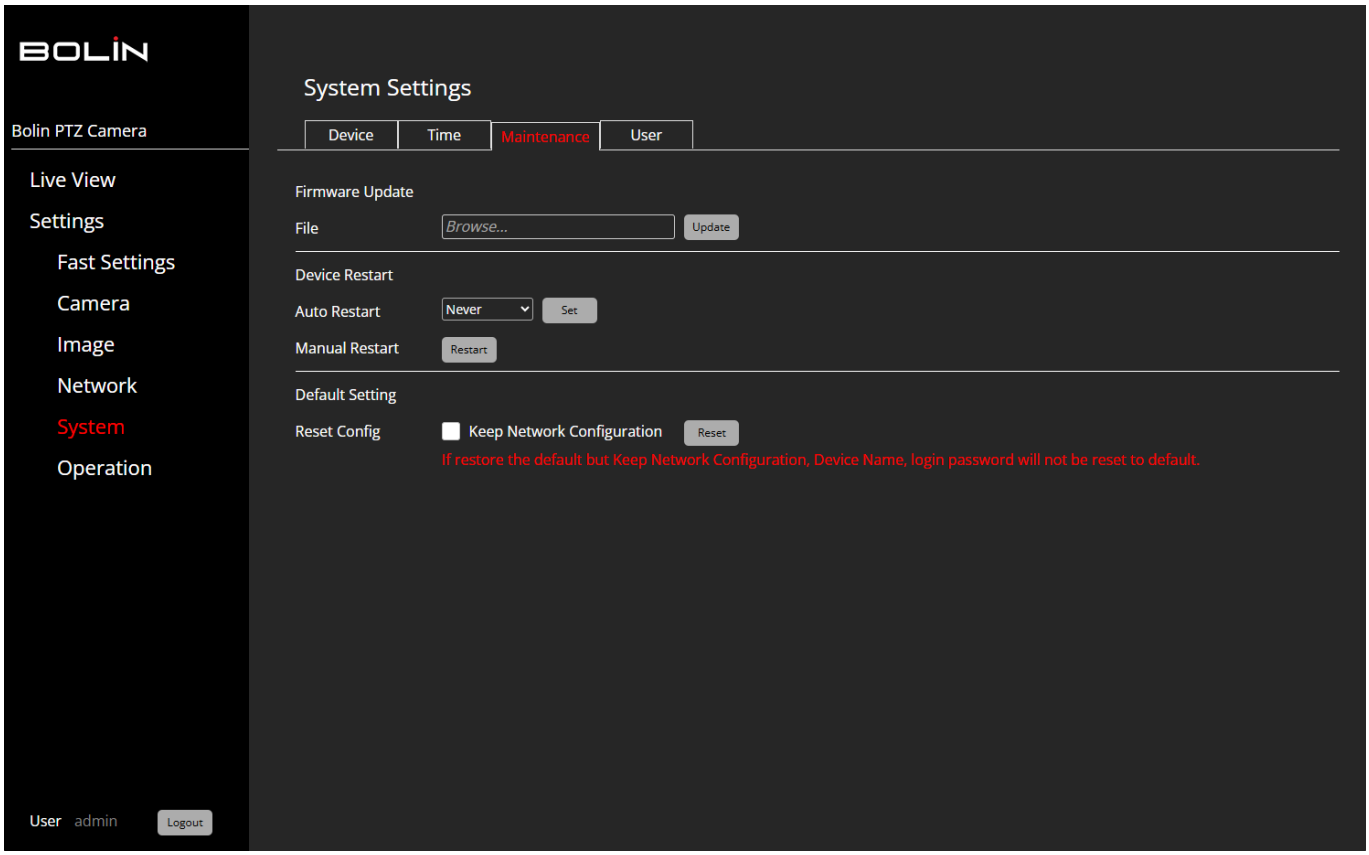

Firmware Update:

To update the firmware, follow these steps:

1. Visit Bolin Technology's official website at www.BolinTechnology.com.
2. Navigate to the "Support Center" and select the "Download Center" option.
3. Input the model number of the device and select the corresponding device from the list.
4. Download the firmware file and save it to a location on the computer.
5. Access the web interface of the device. The downloaded firmware file can be dragged and dropped into the designated box or the box can be clicked to manually select the file for upload.
6. After the device has verified the validity of the file, initiate the update process by clicking on the red "Update" button. During the update process, refrain from navigating away from the current tab, page, or window, and avoid clicking elsewhere on the page to prevent the update from failing.
7. Upon successful installation of the update, a prompt will appear instructing to restart the device. Follow this prompt to complete the update process.

NOTE: It is crucial to maintain the current page active during the update process to ensure a successful update. Any navigation away from the page could result in a failed update.

Device Restart: Restarting/ Rebooting the camera.
Default Setting: Restoring the camera to original factory settings.
Checking "**Keep Network Configurations**" box preserves your network settings, device name, and login password during a reset.

User

The User tab, located under the System section, is where you can manage operators who have access to the camera. Note that operators do not have the same level of access to system settings as administrators.

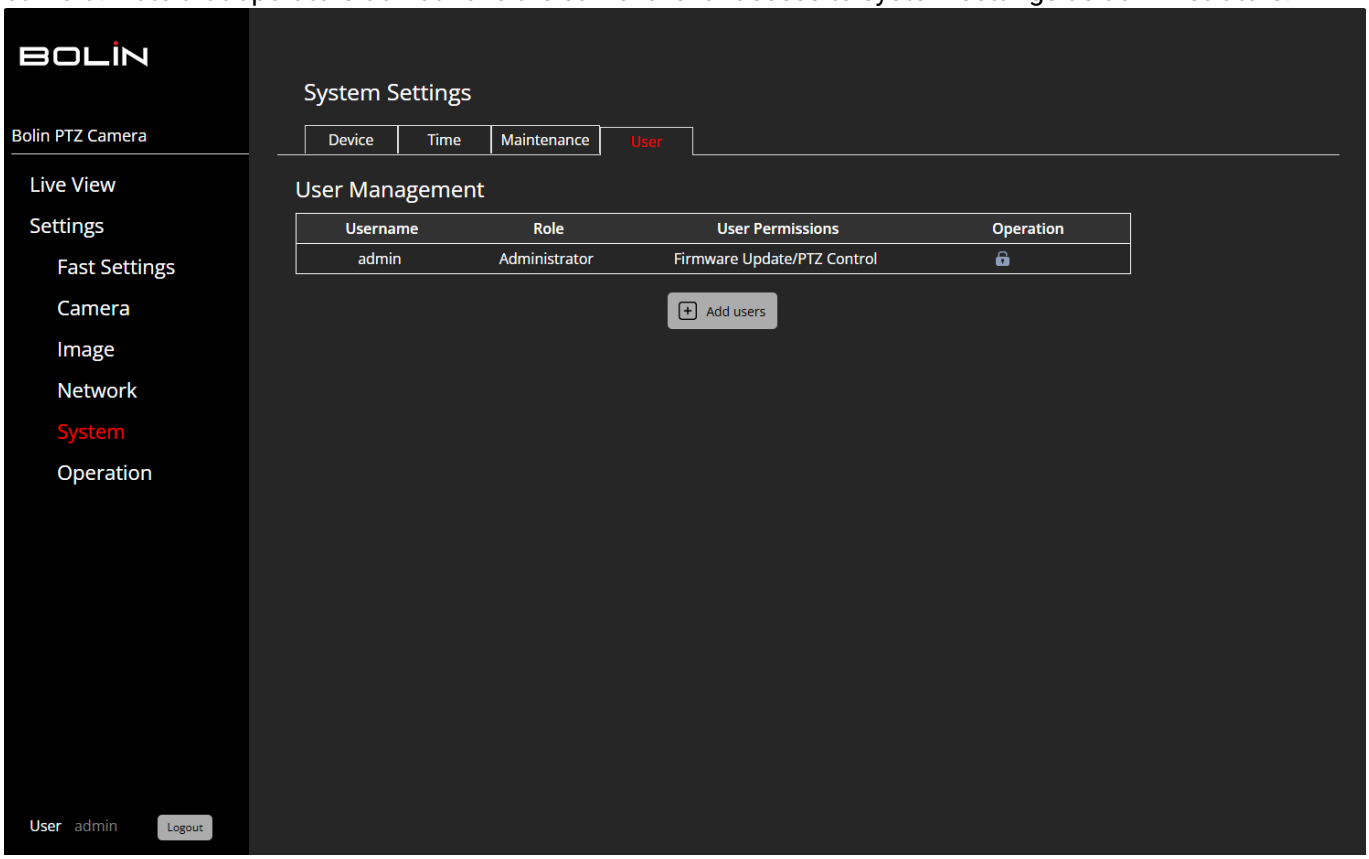

User Management:

1. Click on the 'Add users' button.
2. Enter a username for the new user.
3. Choose a role for the user. You can select either 'Operator', who will not have access to system settings, or 'Administrator', who will have access to all settings.
4. Create a password for the user. We strongly recommend using a strong password that includes at least one upper-case letter, one lower-case letter, one number, and one special character.
5. Set the user's permissions. Select 'Software Upgrade' and/ or 'PTZ Control'.
6. Finally, click on 'Save' to add the user.