FEELWORLD®

WT1S WT1H

4K Wireless Transmission System

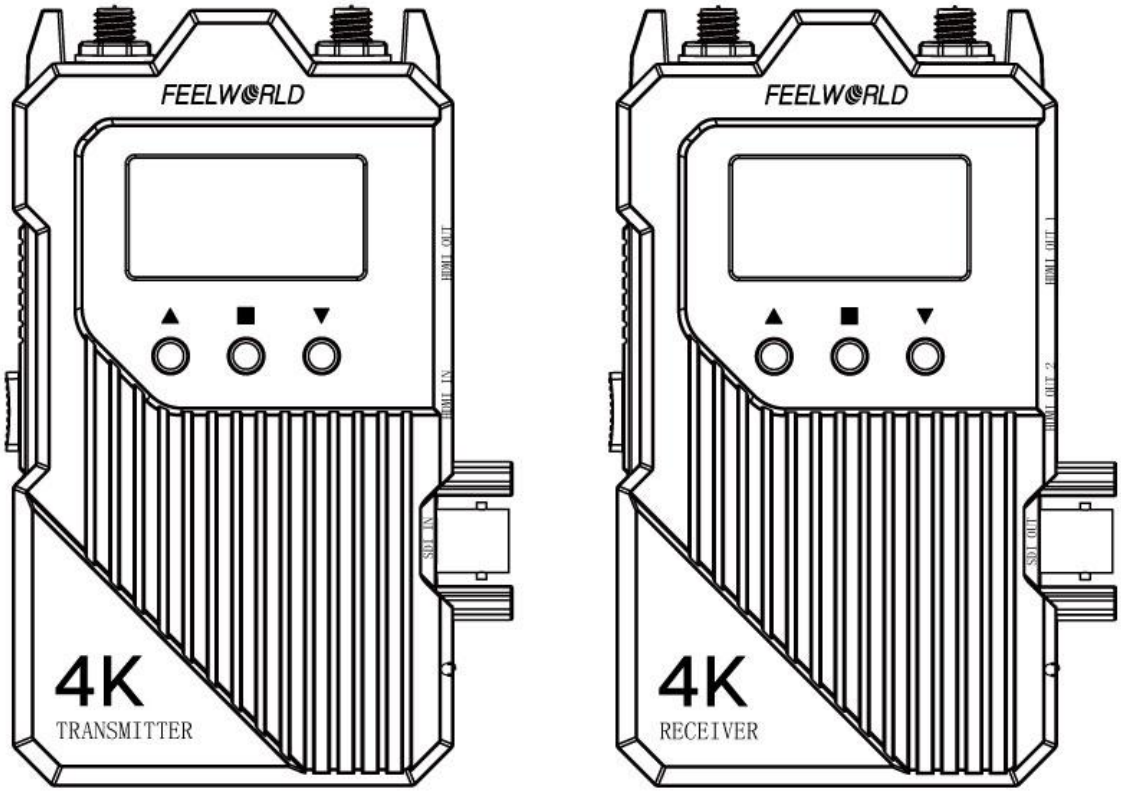

User Manual

V1.0

Foreword

Thank you for purchasing FEELWORLD WT1S/WT1H 4K wireless video transmission system.Equipped with TX/RX set which integrated with intercom and live streaming. With 8Mbps high data rate, SDI (for WT1S) and dual HDMI ports and other features built for professional filmmaking, empowering filmmakers, crews, and content creators everywhere.Please read this manual carefully before using the product, wish you a happy experience!

■ Cautions

- Do not expose this device to extreme hot, cold, dusty or humid environments.
- Do not scratch the device with sharp objects.
- Do not drop this device from high place, as this may cause hardware damage.
- This device is designed for non-water proofing. Please do not allow any liquid to penetrate into the device.
- Do not attempt dismantle, open or repair this device by non-technical person, as this may cause permanent damage to the device.

■ Features

- Dual HDMI & SDI (optional) signal interfaces
- Transmission range up to 1000ft, with ultra-low latency 0.08S
- Up to 4K30Hz
- With type-C to Ethernet adapter accessory, achieve live streaming
- The transmitter can be switched as a receiver at will.
- Wireless full-duplex talkback, real-time intercom between the

director and the photographer.

- One TX to multiple RX
- Support APP monitoring for Android/IOS system.
- 13 frequency channels, AUTO channel scan.

Content

Installation Instruction---------- 3

Port Instruction---------- 4

UI Instruction---------- 6

Streaming Instruction---------- 11

APP Operation Instruction---------- 12

Parameter---------- 15

Frequency Chart---------- 16

Installation Instruction

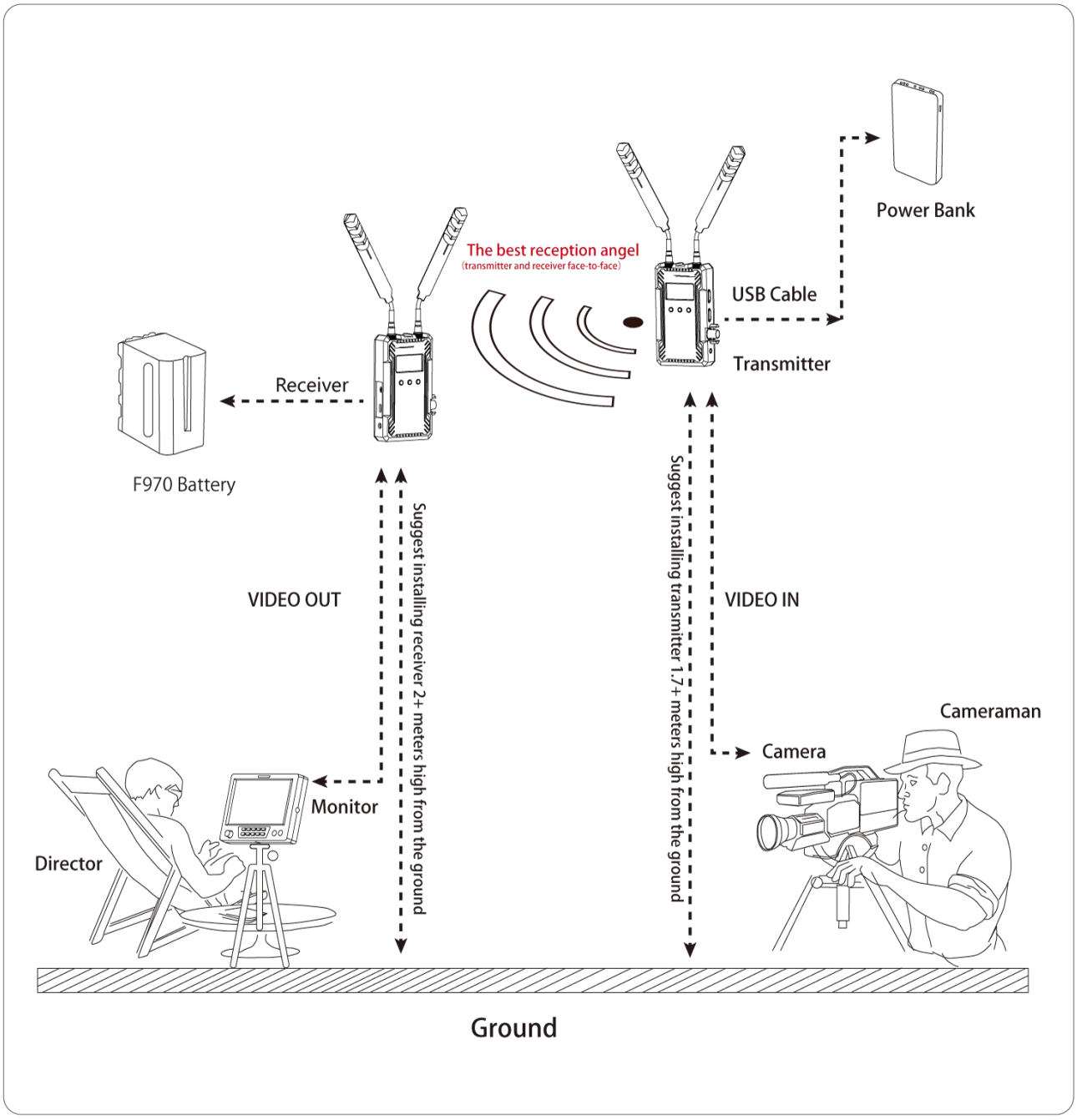

Port Instruction

Take WT1S for example

Transmitter

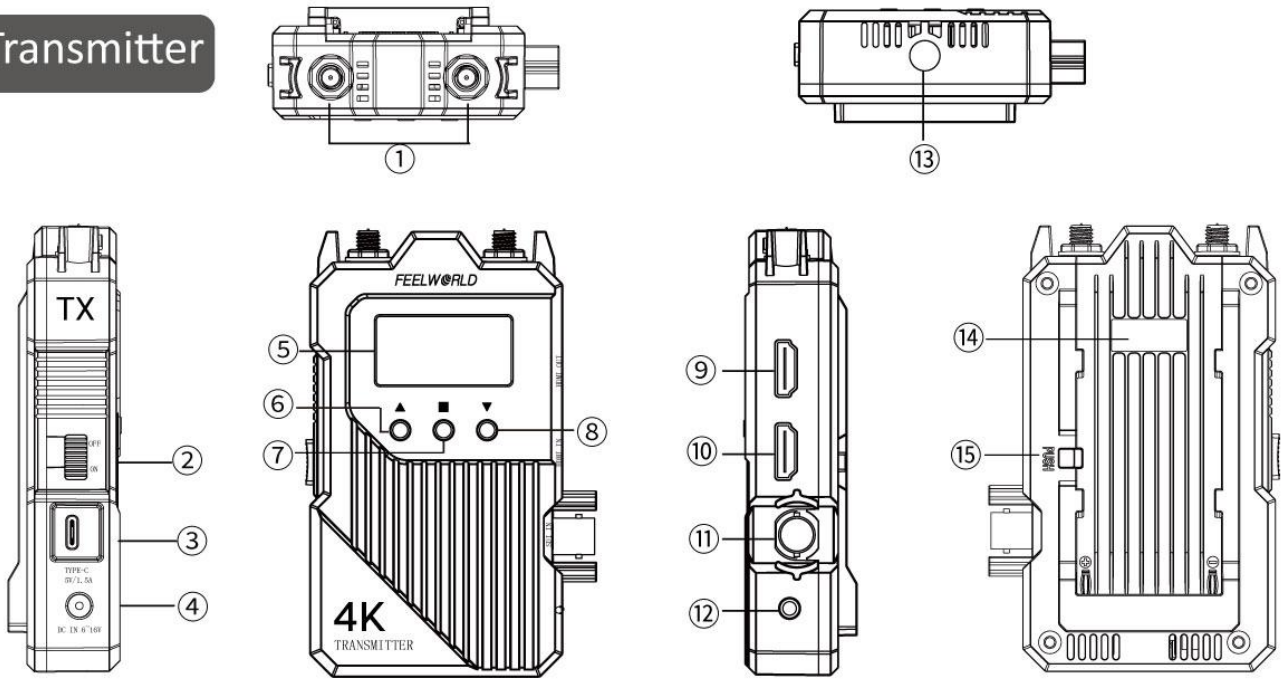

①: Antenna Ports

②: Power OFF/ON

③: Type-C Power Input/Upgrade

④: DC Power IN

⑤: OLED Screen

⑥: UP button

⑦: OK button

⑧: DOWN button

⑨: HDMI Signal Output

⑩: HDMI Signal Input

⑪: SDI Signal Input

⑫: 3.5mm Earphone Port

⑬: 1/4 Screw Hole

⑭:NP-F battery slot

⑮:Battery Release Button

Port Instruction

Receiver

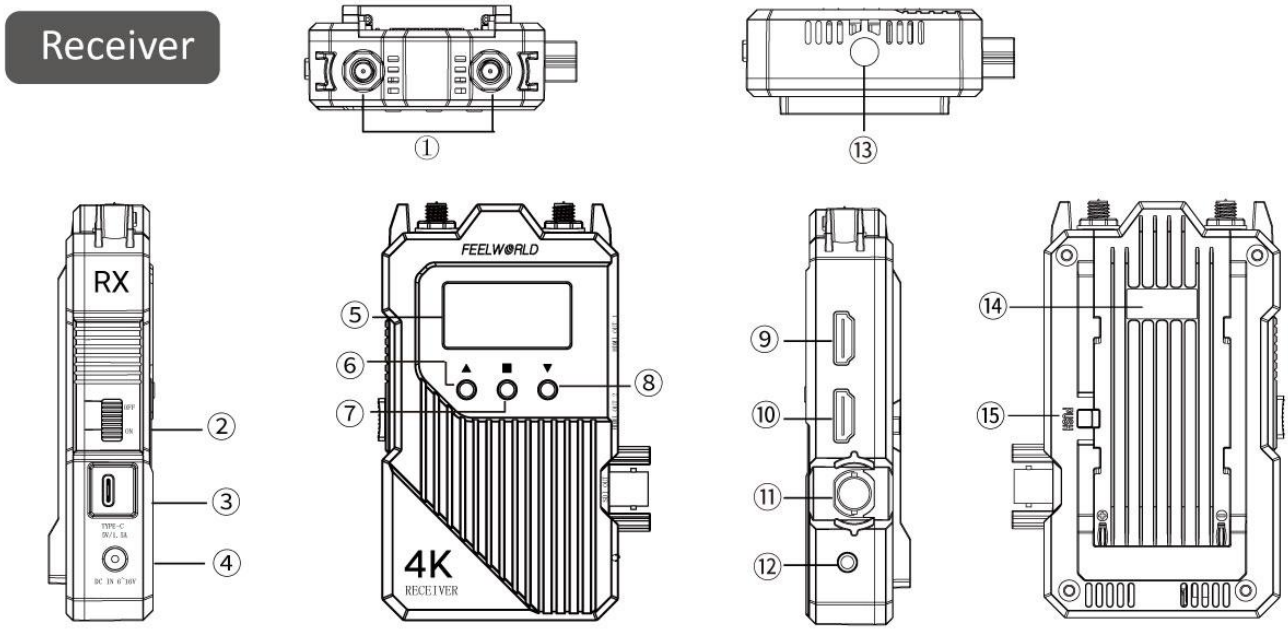

①: Antenna Ports

②: Power OFF/ON

③: Type-C Power Input/Upgrade

④: DC Power IN

⑤: OLED Screen

⑥: UP button

⑦: OK/MENU button

⑧: DOWN button

⑨: HDMI Signal Output1

⑩: HDMI Signal Output2

⑪: SDI Signal Output(optional)

⑫: 3.5mm Earphone Port

⑬: 1/4 Screw Hole

⑭:NP-F battery slot

⑮:Battery Release Button

UI Instruction

1. Startup

The startup screen is as below. When the device runs, the main menu will display.



2. Main Menu

including channel, device type(TX/RX), link status, signal strength, video format, intercom mode, battery level, temperature, fan status, etc. information.

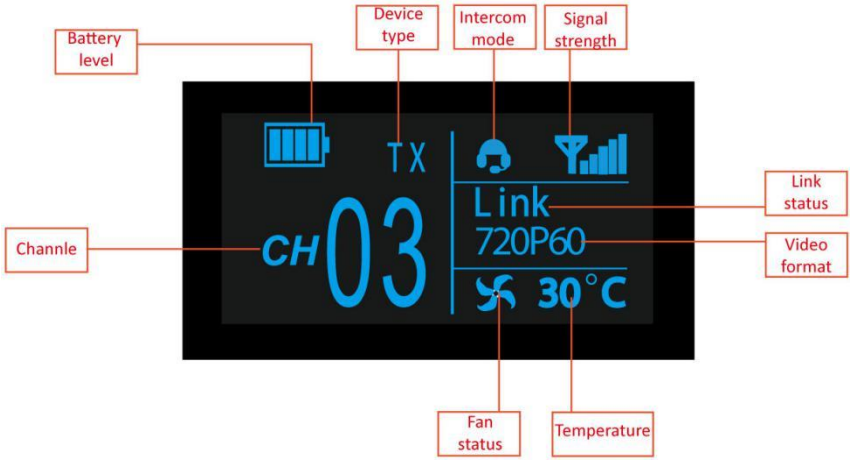

Channel switch: press“△”or“▽”to change channels. Press“□”to confirm the channel.

3. Secondary Menu

Long press“□”for 2 seconds to enter into the secondary menu.

Long press“□”for 2 seconds again to back to the secondary menu.

Press“△”or“▽”to switch the options in secondary menu and press“□”to confirm selection.

Device (transmitter only): device type

Switch TX (transmitter) and RX (receiver) manually.

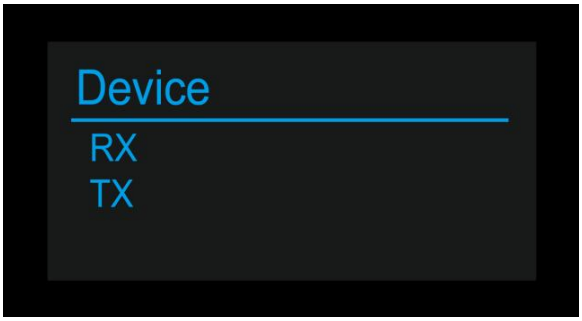

FAN status

Turn on or off the fan manually

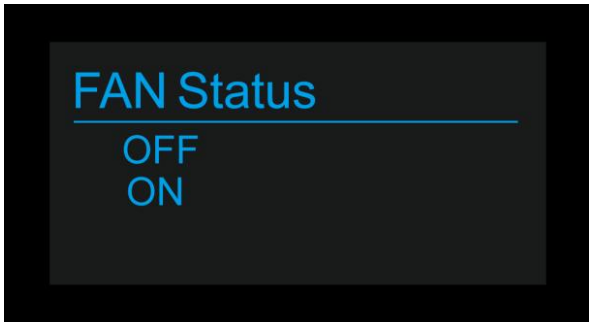

UI Instruction

Intercom

Switch between Full Duplex, TD mode(TD speak, Cameraman listen), OFF(turn off intercom)



WIFI_SSDI

Showing device name and password

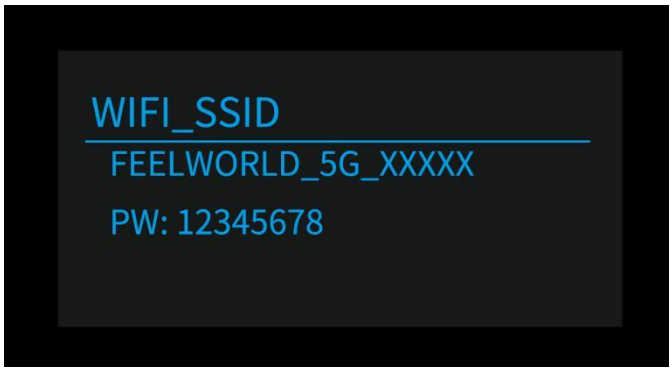

Version

Showing the device's version number

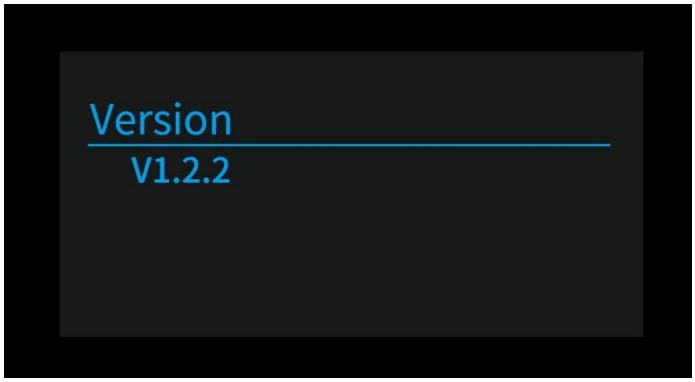

UI Instruction

Web



Telephone

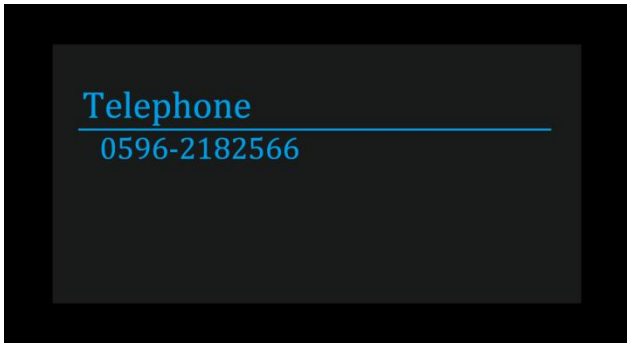

IP: IP address (only the receiver has this menu)

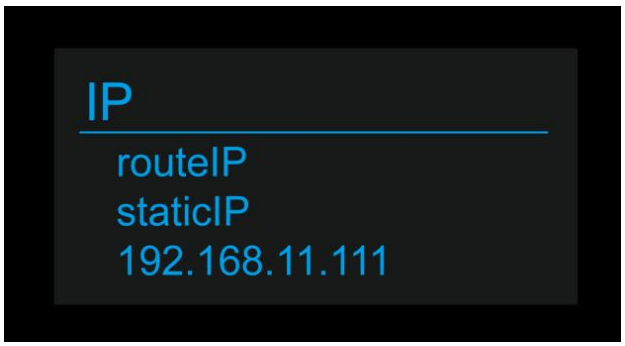

UI Instruction

Language

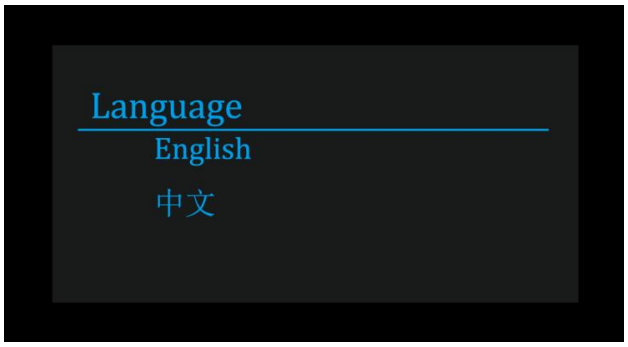

Working Mode

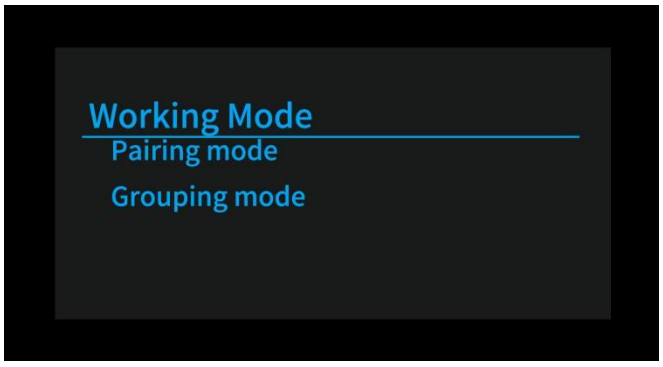

WPS: pairing

To pair transmitter and receiver. One Transmitter allows to pair 4 receiver maximum. Turning on WPS both for transmitter and receiver at the same time, then turn off the receive which finished pairing. Using the same pairing method to add next one receiver. Last, turning on all of the paired devices.

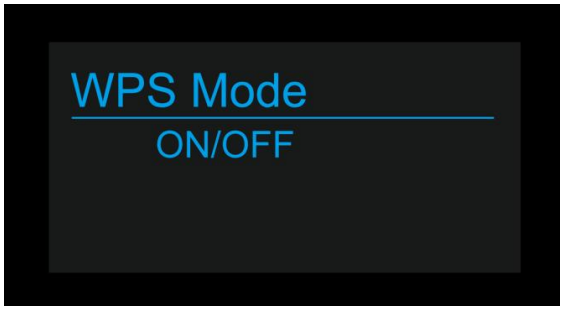

Streaming Instruction

After the receiver links to transmitter and receives the video, plug the Type-C to Ethernet
adapter to receiver’s Type-C port. The Type-C to Ethernet adapter will flash red light.

Static IP setting

1. The receiver’s default mode is static IP. It can be selected in the secondary menu IP->staticIP

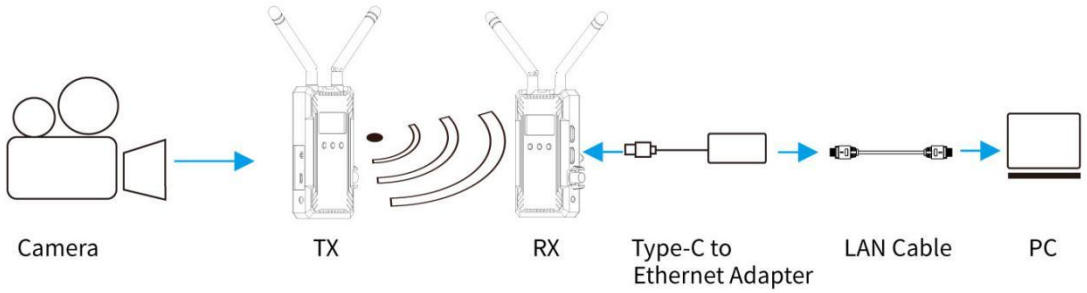

2. As the picture shown above, connect the Type-C to Ethernet adapter with computer via LAN cable.
3. The receiver's static IP address is 192.168.11.111. It can be found on the receiver's secondary menu. The computer also has to be set to static IP. Set the computer's static IP to be 192.168.11.xxx, xxx can be replaced by any number between 2 and 254 not include 111. After the settings completed, run CMD->ping 192.168.11.111 on computer to check if it works.
4. Use the URL rtsp://192.168.11.111:554/test.264 on up streaming software such as VLC or OBS.

RouteIP setting

1. Enter into the secondary menu on the receiver's IP. Then select routeIP

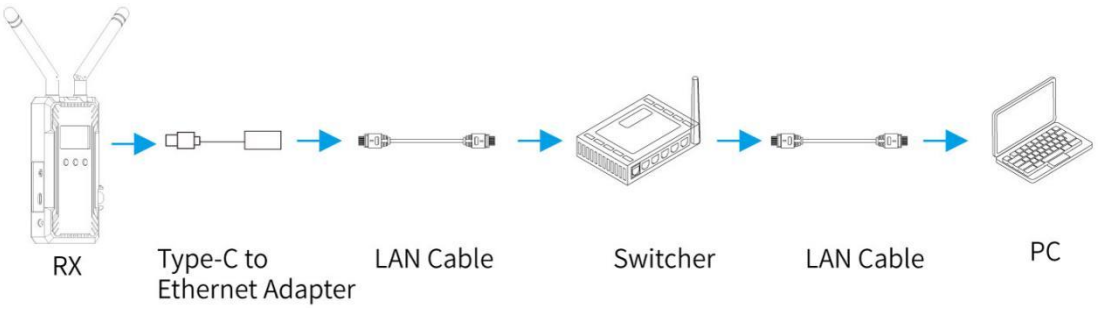

2. Connect a monitor to the receiver. Then connect the receiver to the router via the Type-C to Ethernet adapter. If the blue light flashes on the adapter, it indicates that the connection is good. The monitor will show the IP address.
3. Connect the computer to the router. Push streaming with the url: rtsp://IP address shown on the monitor/test.264

APP Operation Instruction

1. APP Download

iOS APP Download

Download on the App Store

iOS user search "feelworld " to get

(APP name: MMonitor)

Android APP Download (APP name: Feelworld Wireless)

Search “feelworld wireless” on Google Play to get

Scan the QR code to download

2. Connect smart devices to transmitter

After the transmitter is powered on, go to Setting-Wireless & networks on smartphone/tablet, select the transmitter’s name and input the password to connect the devices. Please find the transmitter’s name and initial password as below. Then go to APP home page and click “Video” to m

APP Operation Instruction

(Note: No need to input password again if it was saved on smart phone/tablet)

Device name: FEELWORLD_5G_XXXXX

Password: 12345678

3. APP Operation (e.g. Android System)

a. Click “Video” on home page to enter into monitoring mode.

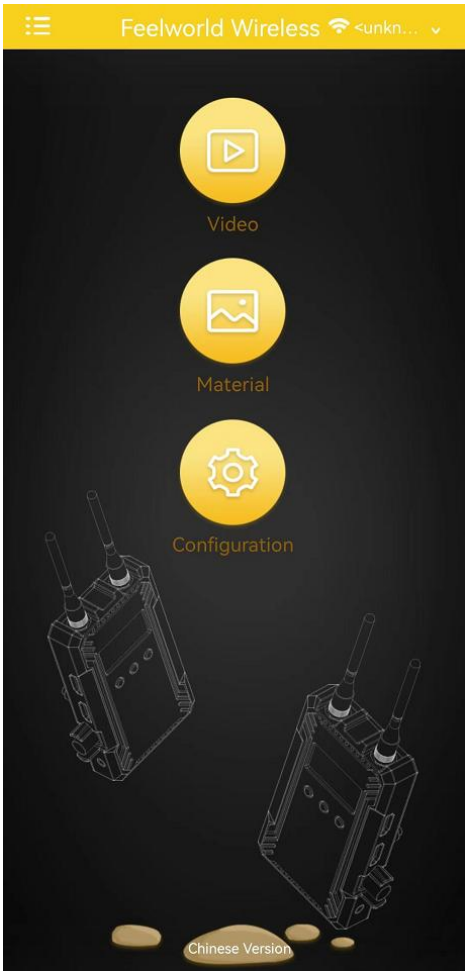

b. Click “∨” at the bottom of screen. It will show SAVE IMAGE, RECORD (only CONFIGURATION.

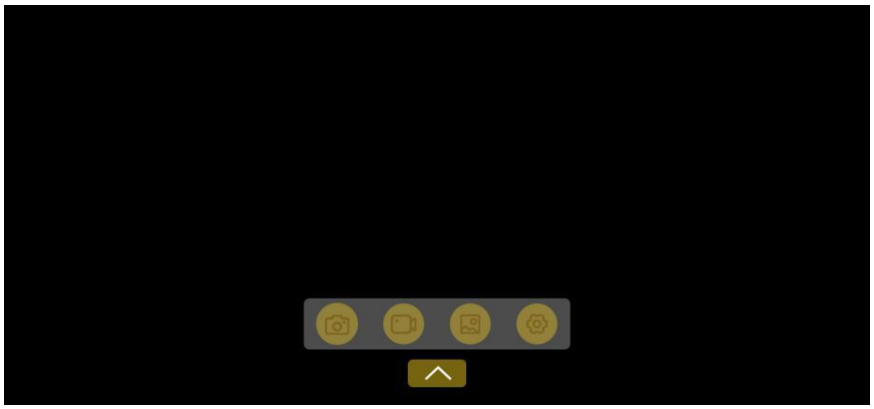

Long press the screen to show up the professional monitoring menu. Monochrome, False Color, Center Marker are available at present, more features are developing.

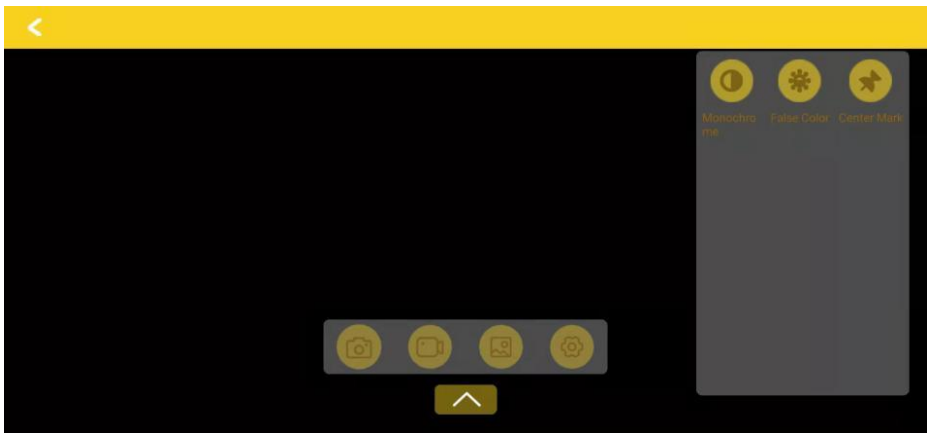

c. Click “Material”to check the images and videos saved on smartphone/tablet.

d. Click “ Configuration”to access configuration screen.

e. Click 英文版/Chinese Version at the bottom of home page to change language.

Parameter

	Transmitter	Receiver

Screen	OLED	OLED
Interface	1 * SDI input (optional) 1 * HDMI input, 1* HDMI output 2 *Antenna port （RP-SMA Male） DC power input, 3.5mm headphone jack , Type-C	2* HDMI output 1* SDI output (optional) 2 *Antenna port （RP-SMA Male） DC power input, 3.5mm headphone jack, Type-C
Power Supply Way/Voltage Range	F970 battery , Type-C: 5V/1.5A DC adapter: 6-16V Note: Due to the actual output of some batteries will be greater than 16V, it may burn out. Please make sure that the actual output voltage of the battery used is less than 16V.	F970 battery , Type-C: 5V/1.5A DC adapter: 6-16V Note: Due to the actual output of some batteries will be greater than 16V, it may burn out. Please make sure that the actual output voltage of the battery used is less than 16V.
Power Consumption	<7.5W	<6.5W
HDMI Input/Output Video Format	480P60, 576P60 720P60/59.94/50 1080P60/59.94/50/30/29.97/25 /24/23.98 1080I60/59.94/50 HDMI Type A	480P60, 576P60 720P60/59.94/50 1080P60/59.94/50/30/29.97/25 /24/23.98 1080I60/59.94/50 HDMI Type A
SDI Input/Output Video Format	480P60, 576P60 720P60/59.94/50 1080P60/59.94/50/30/29.97/25/24/ 23.98 1080I60/59.94/50 1*BNC	480P60, 576P60 720P60/59.94/50 1080P60/59.94/50/30/29.97/25/24/ 23.98 1080I60/59.94/50 1*BNC
Frequency	5.1-5.9GHz	5.1-5.9GHz
Modulation Mode	OFDM	OFDM
Transmission Power	Maximum 17dBm	/
Receiving Sensitivity	/	-87dBm
Band Width	20MHZ	20MHZ
Latency	Min0.08S	Min0.08S
Intercom Frequency Response Range	20Hz~20KHz	20Hz~20KHz
Operating Temperature	0℃ ~ 40℃	0℃ ~ 40℃
Storage Temperature	-20℃ ~ 60℃	-20℃ ~ 60℃
Unit Size(mm)	67L*24W*118H (excluding antenna）	67L*24W*118H （excluding antenna）
Unit Weight	128g	128g

Frequency Chart

Device Channel	WiFi Channel	Frequency/MHz
1	36	5180
2	40	5200
3	44	5220
4	48	5240
5	149	5745
6	153	5765
7	157	5785
8	161	5805
9	165	5825

Common Problem

1. The screen appears mosaic or the signal connection is unstable
It means that there is a WIFI signal close to the transmission frequency, you can re-select another channel. (Note: only the receiver is allowed to adjust the channel)

2. When the transmitter and receiver cannot be connected.
Please turn off the transmitter and receiver, then turn them on again at the same time, and turn on the WPS mode to pair again.

3. When signal frequency is weak
Please try to choose another channel with a wider frequency span. (For instance, the signal of channel 8 is weak, please choose channel 1 or 5, b utnot channel 7 or channel 9).

4. The poor WIFI reception of the mobile phone
It is related to the brand and model of the mobile phone. Please try different mobile phones.

FCC Caution

This device complies with part 15 of the FCC Rules. Operation is subject to the following two conditions: (1) This device may not cause harmful interference, and (2) this device must accept any interference received, including interference that may cause undesired operation.

Any Changes or modifications not expressly approved by the party responsible for compliance could void the user's authority to operate the equipment.

Note: This equipment has been tested and found to comply with the limits for a Class B digital device, pursuant to part 15 of the FCC Rules. These limits are designed to provide reasonable protection against harmful interference in a residential installation. This equipment generates uses and can radiate radio frequency energy and, if not installed and used in accordance with the instructions, may cause harmful interference to radio communications. However, there is no guarantee that interference will not occur in a particular installation. If this equipment does cause harmful interference to radio or television reception, which can be determined by turning the equipment off and on, the user is encouraged to try to correct the interference by one or more of the following measures:
-Reorient or relocate the receiving antenna.
-Increase the separation between the equipment and receiver.
-Connect the equipment into an outlet on a circuit different from that to which the receiver is connected.
-Consult the dealer or an experienced radio/TV technician for help.
This Product meets the government's requirements for exposure to radio waves. The guidelines are based on standards that were developed by independent scientific organizations through periodic and thorough evaluation of scientific studies. The standards include a substantial safety margin designed to assure the safety of all persons regardless of age or health. FCC RF Exposure Information and Statement the SAR limit of USA (FCC) is1.6 W/kg averaged over one gram of this Device (FCC ID: 2A9QY-W1000S) has been tested against this SAR limit. This device was tested for typical operations 10mm from the body. To maintain compliance with FCC RF exposure requirements, 10mm separation distance should. maintained to the user's bodies。 Third-party belt-clips, holsters, and similar accessories used by this device should not contain any metallic components. Body-worn accessories that do not meet these requirements may not comply with RF Exposure requirements and should be avoided. Use only the supplied or an approved antenna.

★ As we are improving product features and product performance, so if there is any change on the specification without prior notice.