MAGNUS®

VH-1190

Owner's Manual



MAGNUS®

Video Head with Vertical Tilt

Thank you for choosing Magnus.

The Magnus VH-1190 video head turns any photo tripod into a platform with features that will benefit videographers of any level. It features fluid-type movement and a spring-loaded counterbalance system for smooth pan and tilt shots. An angle-adjustable and telescoping pan handle provides ergonomic control of the head for still photos and video. Lock down knobs assure dependable camera stability when it's mounted on a tripod. For rapid camera angle changes, the quick-release assembly features a 90° tilt for instantly changing from landscape to portrait camera orientation. Dual integrated bubble levels make aligning your camera with the horizon fast and easy. For on-the-go image makers, it's constructed with sturdy, high-grade aluminum that will withstand travel and frequent use.

User Cautions

- Please read and follow these instructions and keep this manual in a safe place.
- Never set up or dismount a head while a camera is mounted.
- Do not exceed the head's maximum weight capacity.
- The camera should be securely fastened to the quick-release mounting plate before mounting onto the head.
- Do not lift or move your tripod by the head.
- Do not hang anything on the pan handle.
- The safe operation of the head is the responsibility of the user.
- All images are for illustrative purposes only.

Overview

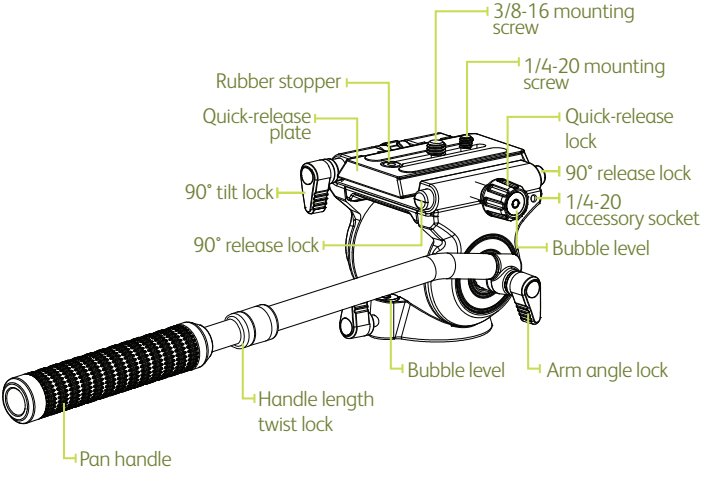
3/8-16 mounting screw
1/4-20 mounting screw
Rubber stopper
Quick-release plate
Quick-release lock
90° release lock
90° tilt lock
1/4-20 accessory socket
90° release lock
Bubble level
Bubble level
Arm angle lock
Handle length twist lock
Pan handle

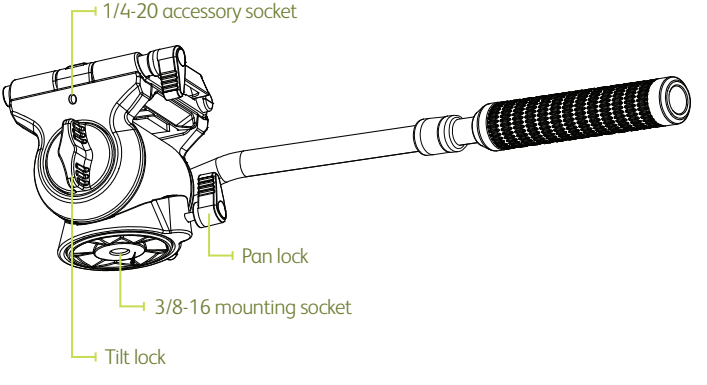
1/4-20 accessory socket
Pan lock
3/8-16 mounting socket
Tilt lock

Operation

Attaching and Adjusting the Pan Handle

1. Screw the pan handle into the head with the arm angle lock.
2. Adjust the angle of the handle by loosening the arm angle lock.
3. Adjust the length of the arm by loosening the handle length twist lock.

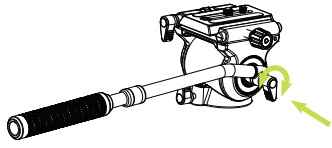

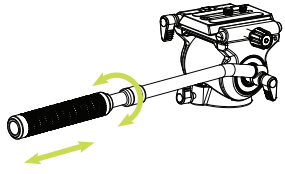

Attaching the VH-1190 to a Tripod or Monopod

Screw the head onto the tripod's 3/8-16 stud.

If the tripod or monopod has a 1/4-20 stud, screw the included 3/8-16 to 1/4-20 bushing into the head's mounting socket.

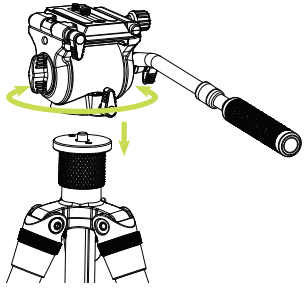

Attaching and Balancing a Camera

1. Remove the quick-release plate by loosening the quick-release lock.

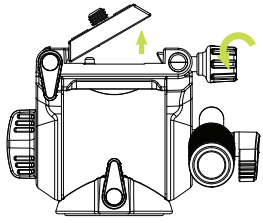

2. Use the 1/4-20 or 3/8-16 screw to attach the plate to the bottom of the camera. Tighten the screw to the camera with the D-ring or a slotted screwdriver.

Note: Remove the screw that's not being used by first removing the rubber stopper and then sliding the unused screw through the hole before replacing the stopper.

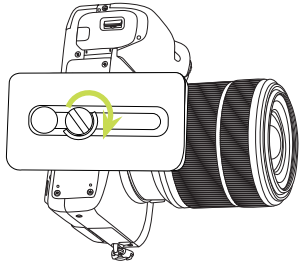

3. Place the camera and quick-release plate into the clamp by angling the plate into the clamp and tightening the quick-release lock.

4. Find the proper balance for your camera by sliding the plate forward and back in the clamp, then tighten the quick-release lock lock until secure.

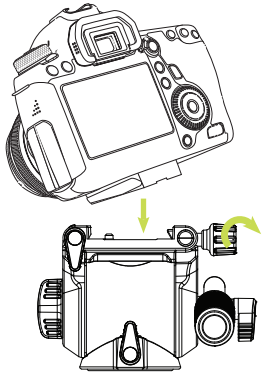

Tilt Controls

The VH-1190 has a spring-loaded counterbalance which returns the head to a horizontal position when the handle is released. The more you tighten the tilt lock, the slower the head will return to vertical.

Tighten the tilt lock to lock the tilt action.

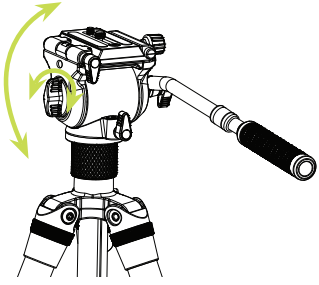

Pan Controls

Tighten the pan lock to lock the pan action.

Loosen the pan lock to the desired tension for smooth action using the pan handle.

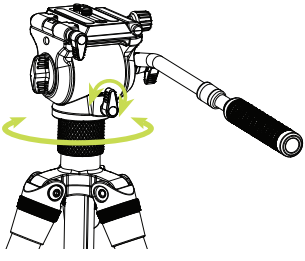

90° Tilt

Loosen the 90° tilt lock and press both 90° release locks to change from landscape to portrait orientation.

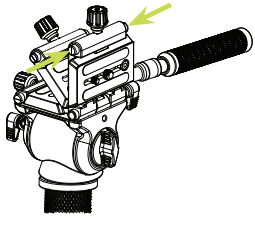

Extra Mounts

Use the two 1/4-20 accessory mounts to attach an articulating arm and add accessories like a small LED light, flash, or microphone to the VM-1190.

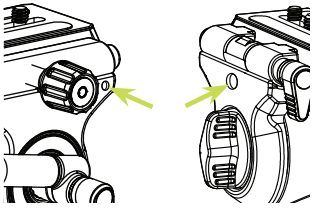

Specifications

Load Capacity	11 lb. (5 kg)
Base Mount	3/8-16 female Flat base
Additional Mounts	1/4-20 (×2)
Height (w/o arm)	3.8 in. (9.6 cm)
Width (w/o arm)	4.7 in. (12 cm)
Weight (with handle)	2.2 lb. (998 g)
Base Diameter	2.5 in. (63 mm)
Counterbalance System	Spring-loaded
Quick-Release Plate Length	3.5 in. (8.9 cm)
Quick-Release Plate Sliding Range	1.9 in. (48 mm)
Quick-Release Safety	Yes
Camera Mounting Screw	1/4-20, 3/8-16
Tilt Drag	None
Tilt Range	+90° to -80°
Tilt Lock	Yes
Portrait Tilt	90°
Pan Drag	None
Pan Range	360°
Pan Lock	Yes
Pan-Arm Rosettes	Yes
Leveling Bubble	Yes (×2)
Pan Arm Length	9.1 to 14.5 in. (23.1 to 37 cm)
Material	Aluminum
Color	Black

ONE-YEAR LIMITED WARRANTY

This Magnus product is warranted to the original purchaser to be free from defects in materials and workmanship under normal consumer use for a period of one (1) year from the original purchase date or thirty (30) days after replacement, whichever occurs later. The warranty provider's responsibility with respect to this limited warranty shall be limited solely to repair or replacement, at the provider's discretion, of any product that fails during normal use of this product in its intended manner and in its intended environment. Inoperability of the product or part(s) shall be determined by the warranty provider. If the product has been discontinued, the warranty provider reserves the right to replace it with a model of equivalent quality and function.

This warranty does not cover damage or defect caused by misuse, neglect, accident, alteration, abuse, improper installation or maintenance. EXCEPT AS PROVIDED HEREIN, THE WARRANTY PROVIDER MAKES NEITHER ANY EXPRESS WARRANTIES NOR ANY IMPLIED WARRANTIES, INCLUDING BUT NOT LIMITED TO ANY IMPLIED WARRANTY OF MERCHANTABILITY OR FITNESS FOR A PARTICULAR PURPOSE. This warranty provides you with specific legal rights, and you may also have additional rights that vary from state to state.

To obtain warranty coverage, contact the Magnus Customer Service Department to obtain a return merchandise authorization ("RMA") number, and return the defective product to Magnus along with the RMA number and proof of purchase. Shipment of the defective product is at the purchaser's own risk and expense.

For more information or to arrange service, visit www.magnustripods.com or call Customer Service at 212-594-2353.

MAGNUS®
A **Gradus Group** Brand

Product warranty provided by the Gradus Group.
www.gradusgroup.com
Magnus is a registered trademark of the Gradus Group.
© 2025 Gradus Group LLC. All Rights Reserved.

GG1