ANTIGRAVITY

A1

User Manual





V1.0

Convention

Legend

Cautions and Warnings

Tips

Glossary

Read Before Your Fist Flight

Read the following documents before the first flight for your safety:

1. Safety Guidelines
2. Quick Start Guide
3. User Manual

It is strongly recommended to read the above-mentioned documents and watch the video tutorial before using our product for the first time. Follow the instructions provided in the quick start guide to prepare for your first flight. For more information, download and read the user manual from the official website.

Video Tutorials

Scan the QR code to watch video tutorials for the safe and proper use of the product.

https://www.antigravity.tech/guide/A1

Download Antigravity App

Download the Antigravity App and follow the prompted instruction to activate your drone and other devices before first use. Scan the QR code above to download the Antigravity App.

Note that the flight altitude of the drone is restricted to 30 m (98.4 th) and a range of 50 m (164 ft), if the drone has not been linked to the Antigravity App upon the first use.

© 2025 Antigravity All Rights Reserved

Contents

Product Profile 1
Introduction 1
Features 1
Product Overview 2
A1 Drone 2
Front View 2
Rear View 2
Vision Goggles 3
Front View 3
Sides View 3
Bottom and Inside View 4
Grip Controller 4
Preparation for First Flight 6
Setting Up A1 Drone 6
Setting Up Vision Goggles 7
Adjusting Lenes 9
Using Vision Correction Lenses 10
Spacer Bracket 11
Setting Up Grip Controller 13
Activate Your Drone 14
Firmware Updates 14
Linking Devices 14
Linking A1 Drone to Vision Goggles 14
Linking Vision Goggles to Grip Controller 15
Take off and Landing 16
Pre-flight Checklist 16
Take Off 16
Landing 18
Auto Landing 18
Landing Protection 19
Precision Landing 20
Manual Landing 22
Post Flight Check List 23
Flight Safety and Control 24
Flight Environments Requirements 24
Flight Protection 25
Flight Altitude and Distance Restriction 25
Flight Safety Best Practice 26
RTH and Obstacle Avoidance Safety Notice 27
Return to Home (RTH) 27
Obstacle Avoidance Safety Notice 28
How to Control Your Drone 29
Basic Operations 29
Horizontal Flight 29
Adjusting Heading of the Drone 30
Climbing and Diving 30
Taking Off and Landing 31

© 2025 Antigravity All Rights Reserved

Stopping the Motors Mid-air 31
Controlling in Free Motion Mode 32
Controlling in FPV Mode 33
Switching Between Control Mode 34
A1 Drone 35
Flight Mode 35
Controlling Mode 36
Free Motion Mode 36
FPV Mode 36
Flight Indicators 37
Before Taking Off 37
After Take-off 38
Return to Home (RTH) 39
Introduction to RTH 39
Home Point 39
RTH Process Breakdown 39
Obstacle Avoidance and Landing 42
Obstacle Avoidance Overview 42
Obstacle Avoidance 42
Enabling Obstacle Avoidance 43
Obstacle Avoidance Action 43
Propeller Guards 43
Installing the Propeller Guards 43
Propellers 45
How to Replace Propellers 45
Flight Battery 46
Safety Notice for Flight Battery 46
Activation of the Flight Battery 47
Using the Flight Battery 47
Charging the Flight Battery 49
Battery Level Indicator 49
Battery Charging Hub 50
Battery Charging Hub Overview 50
Regular Charging 51
Smart Power Pooling 52
Power Bank 53
Battery Charging Troubleshooting 53
Transferring Footages 54
Quick Reader 54
Quick Transfer from Antigravity App 55
Vision System 55
Features 55
Vision System Safety Notices 56
Vision Position Detection Range 56
Flight Recorder 57
Vision Goggles 57
Vision Goggles Overview 57
Home Button 57
Volume Buttons 57
MicroSD Card Slot 58
Power Port 58

© 2025 Antigravity All Rights Reserved

Virtual Beam 60
Basic Operations 60
Re-center the Menu 61
Vision Goggles Menus 62
Flight Menu 62
Vision Goggle Menu 64
Quick Menu 66
Outer Display 67
Outer Display Overview 67
Video Playback 68
Exporting the Footages from Vision Goggles 68
Storage 68
Exporting Footages from Vision Goggles 68
Exporting Footages from SD Card 68
Video See-Through 69
Vision Goggles Safety Notices 69
Grip Motion Controller 70
Power Button and Battery Level Indicator 70
Powering On/Off the Grip Motion Controller 70
Charging the Grip Motion Controller 70
Battery Level Indicators 70
Grip Motion Controller Buttons 72
Grip Motion Controller Signal 74
Alert Sounds 74
Low Battery Alert 74
RTH Alert 74
Antigravity App 75
Product Specification 75
A1 Drone 75
Vision Flight Goggles 80
Grip Motion Controller 83
Frequently Asked Questions (FAQ) 84
Appendix 84
Compliance Information 84

© 2025 Antigravity All Rights Reserved

Product Profile

Introduction

The Antigravity A1 is an drone that defies limits, that combines advanced hand-eye coordination technology with an immersive flying experience. By using the Antigravity Vision goggles and the Antigravity A1 motion controller, users can experience free-flight motion control, real-time perception of flight attitude, precise control, and panoramic view shooting.

Features

- **8K 360 Video:** Our 8K 360 camera captures all angles during the flight.
- **Free Motion Mode:** Unlock the head movement against the flight direction , enables intuitive fly experience.
- **Flight Safety:** Auto landing gear ensures worry-free flight. Obstacle avoidance system detects any obstacle on the flight path.
- **Payload Detection:** Drone lands when detecting excessive payload. Ensure the drone is compliant with recreational use.



- The maximum flight speed of the drone is obtained at sea level in windless conditions. The maximum flight time is defined as the drone is flying at a cruise speed in windless conditions.
- The usage of the 5.8 GHz frequency band is subject the availability of countries or regions. In such cases, the drone will automatically disable this frequency band. Please ensure compliance with local laws and regulations.
- The 5.1 GHz frequency band is only available in countries and regions where it is permitted by law.
- The availability of the High-Capacity Flight Battery is restricted to certain countries and regions. Contact the local reseller or visit the official store for more information.
- The MTOM (Maximum Take-off Mass) of the drone will exceed 249 grams, when the using the High-Capacity Flight Battery. Please ensure compliance with local laws and regulations regarding takeoff weight with using the High-Capacity Flight Battery.

© 2025 Antigravity All Rights Reserved

Product Overview

A1 Drone

Front View

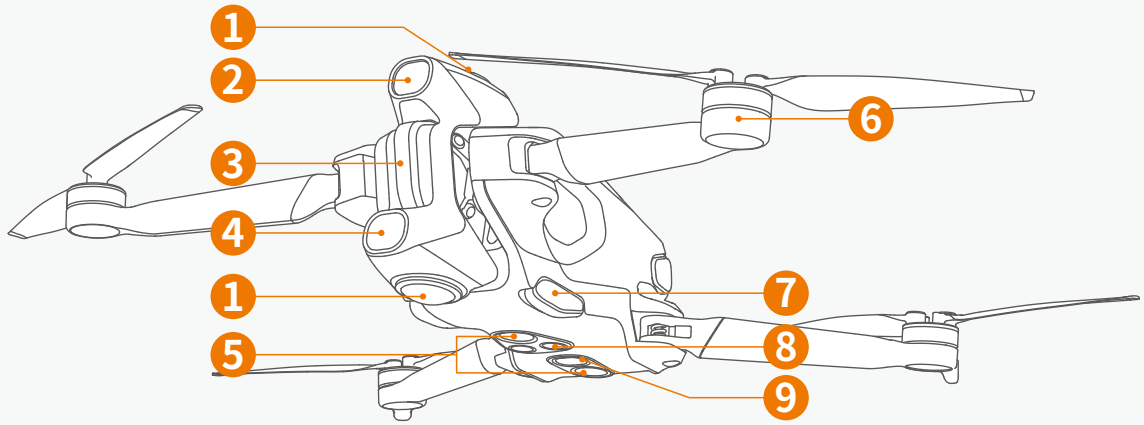

Item	Description	Item	Description
1	360 Camera	6	Motor
2	Forward Vision Sensor	7	Landing Gear
3	Front Indicator	8	Infrared Sensor
4	Forward Vision Sensor	9	Landing Light
5	Downward Vision Sensor		

Rear View

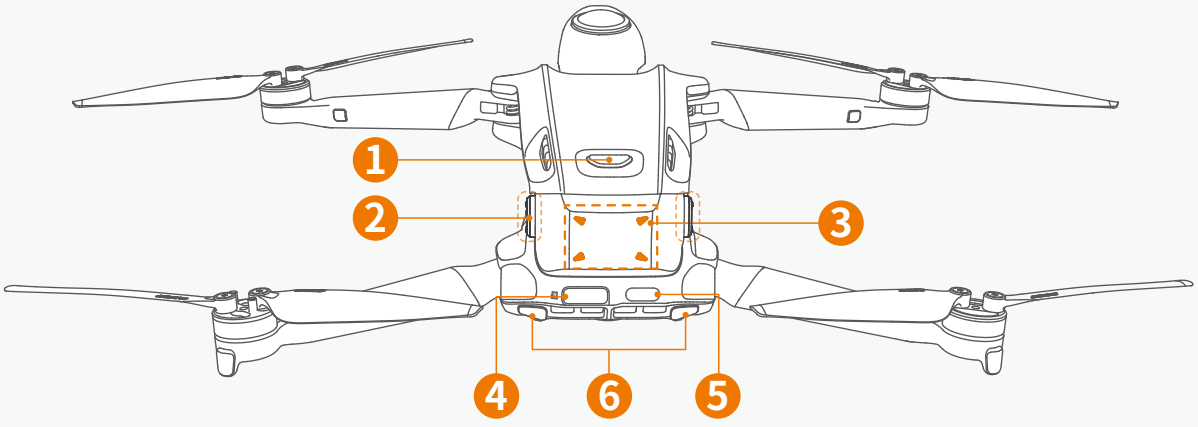

Item	Description	Item	Description
1	Power Button	4	Micro-SD Card Slot

© 2025 Antigravity All Rights Reserved

2	Flight Battery Latch	5	Type-C Port
3	Flight Battery Level Indicator	6	Flight Status Indicator

Vision Goggles

Front View

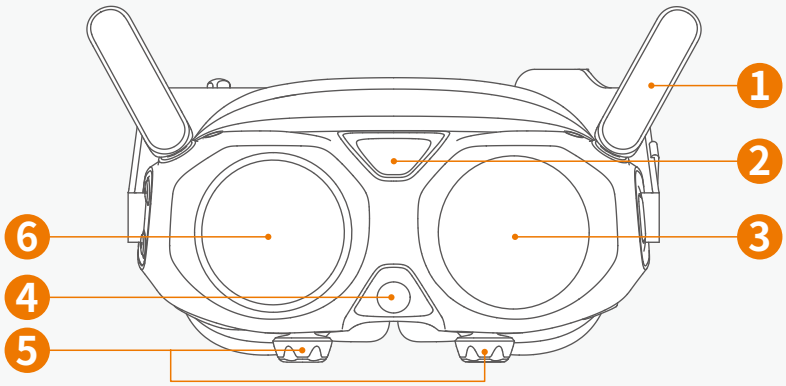

Item	Description	Item	Description
1	Antennas	4	Video See-Through Camera
2	Venting Port	5	Diopter Adjustment Knobs
3	Outer Display	6	Touchpad[1]

Sides View

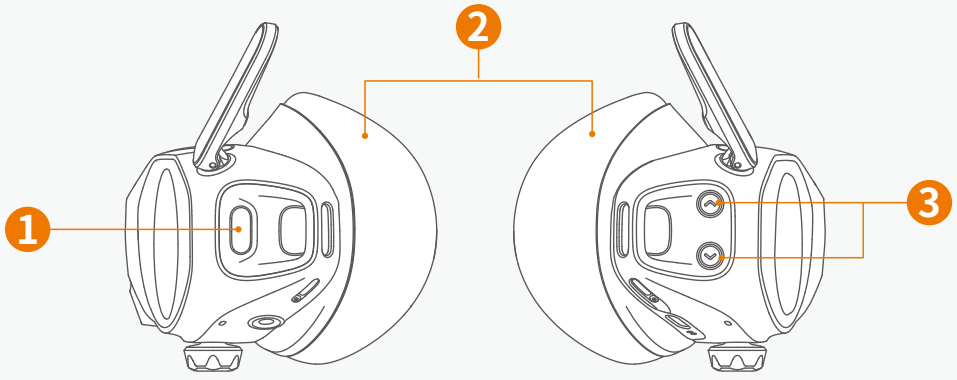

Item	Description	Item	Description
1	Home / Linking Button	3	Volume Button
2	Foam Padding		

[1] *Stay tuned for firmware updates to enable.*

© 2025 Antigravity All Rights Reserved

Bottom and Inside View

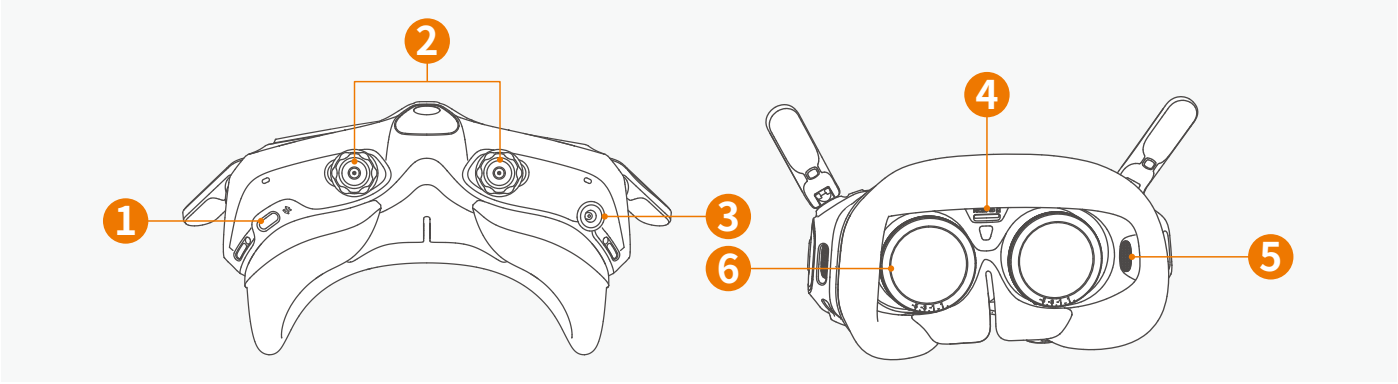

Item	Description	Item	Description
1	Data Port*	4	Memory Card Slot
2	Diopter Adjustment Knobs	5	Headphone Speakers
3	USB-C to DC Power Cable Port	6	Diopter Lens

Grip Controller

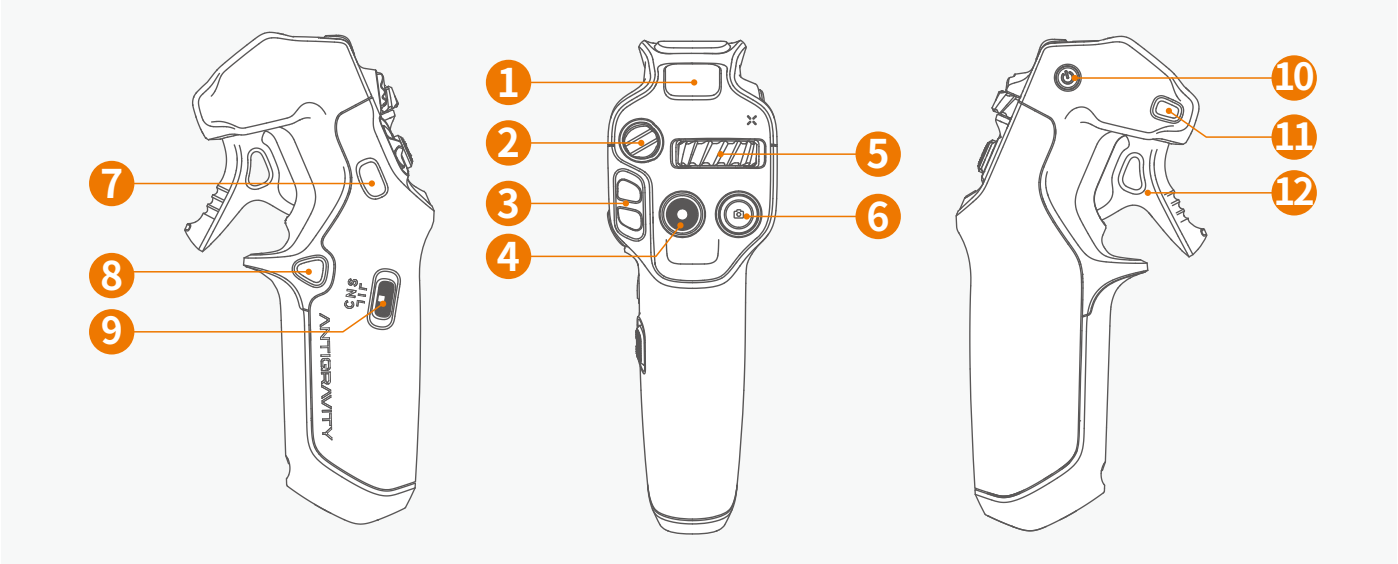

Item	Description	Item	Description
1	**Battery Level Indicator:** Display the current battery level.	7	**Customized C2 Button:** Double press to extend or retract the landing gear. Press once to cancel the RTH.

© 2025 Antigravity All Rights Reserved

2	**Emergency Brake / RTH Button:** Short press to brake and hovers the drone. Press and hold to activate automatic RTH. During the RTH, press twice rapidly to decelerate and exit RTH.	8	**Customized C1 Button:** Long press to activate deep track.
3	**Flight Slider:** ・Pre-flight: Push upward twice in short burst to start the motors (idle mode). Push downward twice to cancel. ・When motor starts: Push the slider upward and hold for over 2 seconds to ascent. ・Mid-flight: Push upward to ascend the drone and downward to descend the drone.	9	**Flight Mode Toggle:** Toggle to switch between these modes ・N (Normal) mode ・S (Sport) mode ・C (Cine) mode
4	**Record Button:** ・In default mode: Short press once to switch to video mode. ・In video mode: Press again to enable picture-in-picture (PIP) mode.	10	**Power Button:** Press once then press and hold to switch on the Grip controller. ・When powered on, press and hold for 10 seconds to enforce shutdown. ・Press and hold for 4 seconds to enter paring mode.
5	**360 Dial Button:** Slide left or right to adjust the liveview and the heading of the drone. Press inward to recenter the perspective of the heading of the drone.	11	**Menu Button:** ・Short press to enter or exit the general menu of the Vision goggles; press and hold to activate the shortcut menu. ・Double press to switch between Free Motion and FPV mode.
6	**Shutter Button:** ・In default mode: Short press once to switch from video mode to photo mode. ・In photo mode: Short press to capture an image.	12	**Throttle Trigger:** ・When controlling the drone: pull to accelerate, release to decelerate. ・When interacting Vision goggles: pull to confirm selections; press and hold to scroll menus.

© 2025 Antigravity All Rights Reserved

Preparation for First Flight

Setting Up A1 Drone

Upon delivery, the drone is in a hibernating state to maintain the battery level. Follow the steps below to prepare for your first flight.

1. The flight battery in the drone is in a dormant state upon delivery. You must activate the battery before using it for the first time. Insert the flight battery into the battery compartment, and then connect it to the drone's USB-C charging port using a charging cable. The battery indicator light will blink green when the battery is activated.

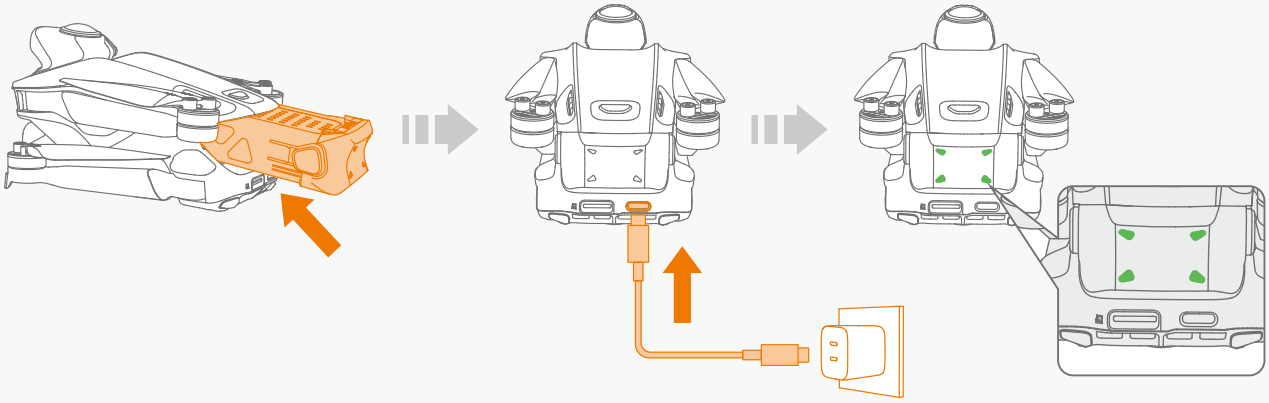

Ensure that at least three or more battery indicator LEDs are lit before the first use.

2.Unfold the rear arms of the drone, then unfold the front of the drone. Ensure that the all propellers are fully deployed.

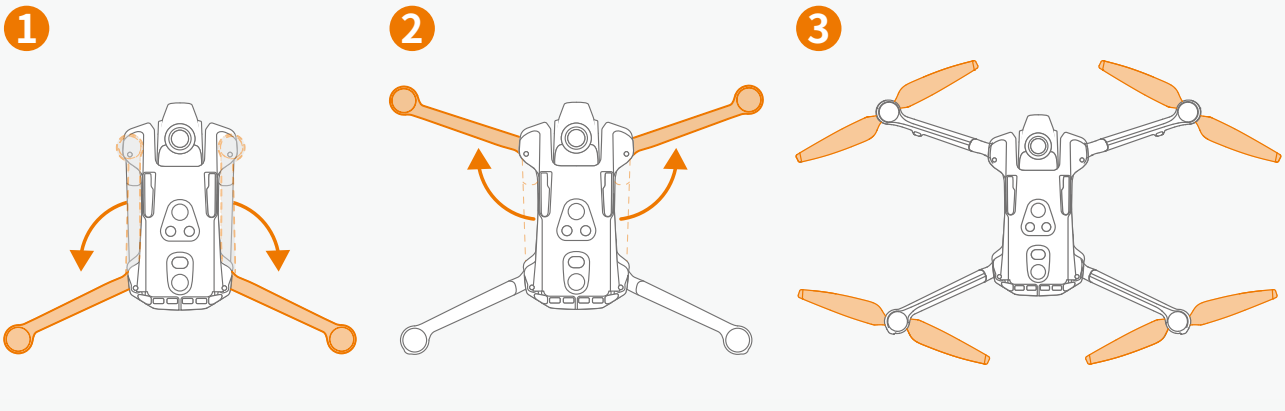

3. Flip over the drone body and manually extend the landing gear located at the bottom of the drone.

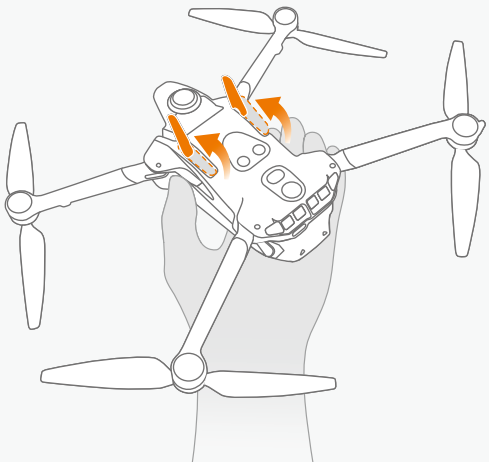

© 2025 Antigravity All Rights Reserved

4. Press once and then press and hold the power button for more than two seconds to power on the drone.

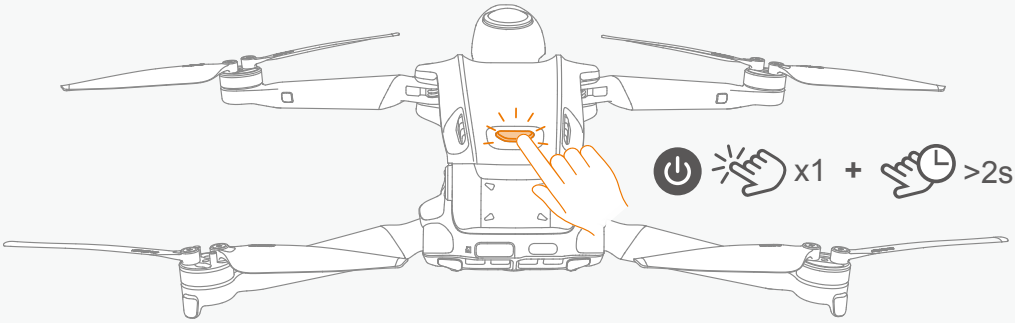

- Use the Antigravity A1 series USB-C charger or other chargers that support the USB PD fast charging protocol for optimal charging performance.
- The maximum charging limit voltage on the drone's charging port is 12 V.
- Peel off all stickers on the body of the drone. Make sure both the front and rear arms are unfolded and the landing gears are deployed.

Setting Up Vision Goggles

1. Prior to the first use, charge the battery of the Vision Goggles to activate the battery.

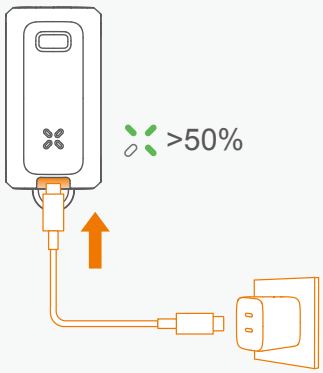

Ensure that at least three or more battery indicator LEDs are lit before the first use.

2. After charging is completed, short press the power button to display the battery level. Press the power button once, then press and hold it for more than 2 seconds to turn the power on or off.



© 2025 Antigravity All Rights Reserved

3. Connect the Vision Goggles to the external Vision Goggles battery via the included USB-C to DC charging cable. Attach the flight goggles battery lanyard on the buckle.

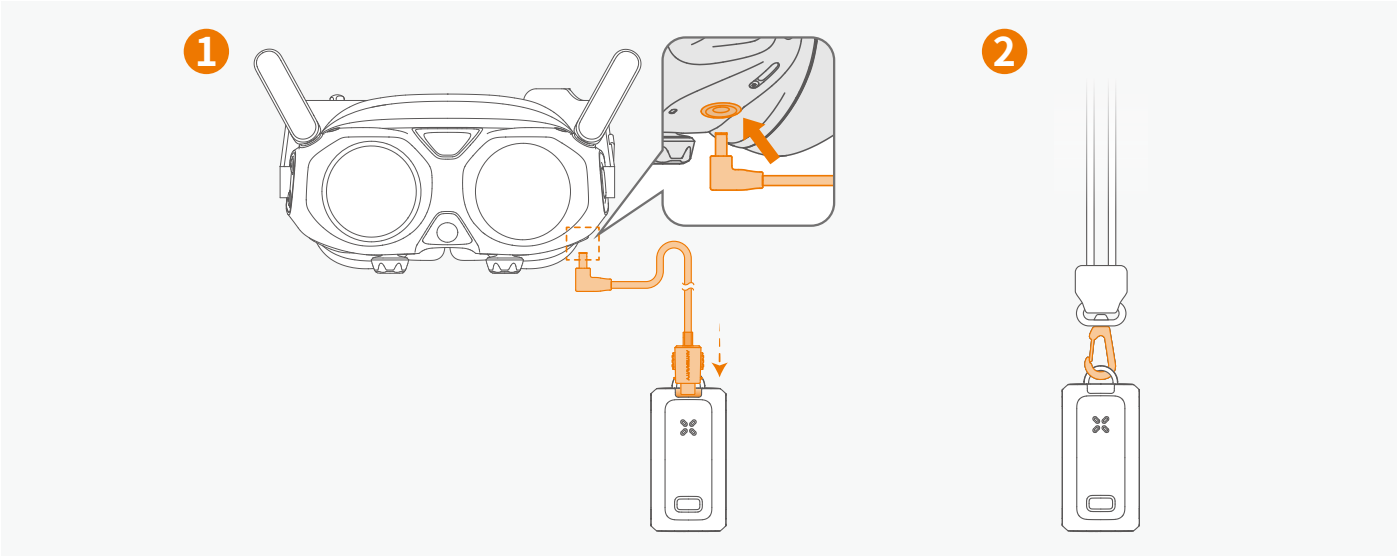

4. Unfold the antennas of the Vision Goggles and hang the Vision Goggles battery on the chest.

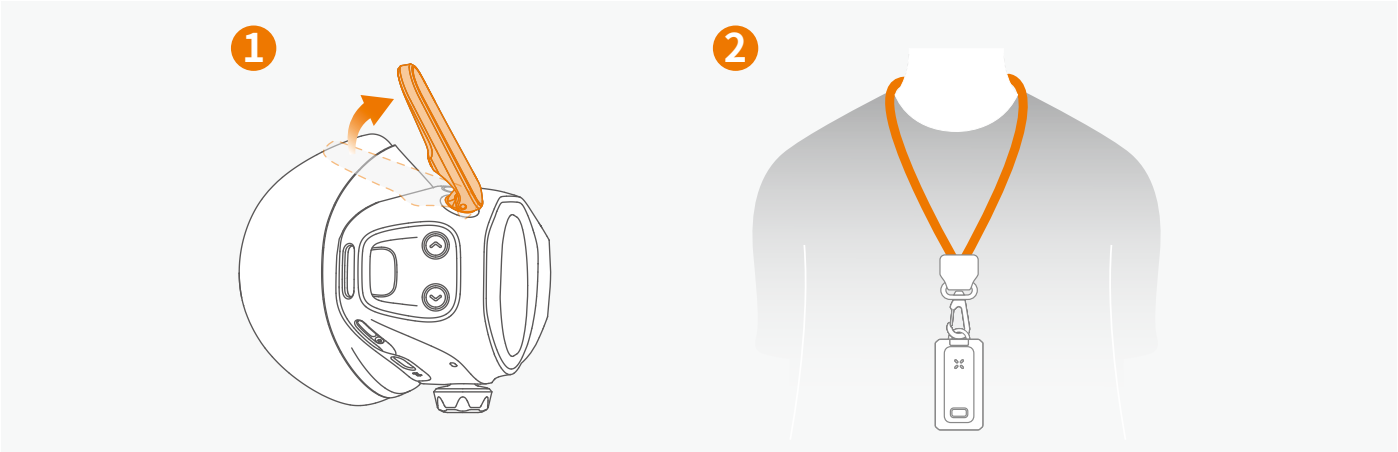

5. Adjust the tightness of the fit via the Velcro on the headband of the Vision Goggles.

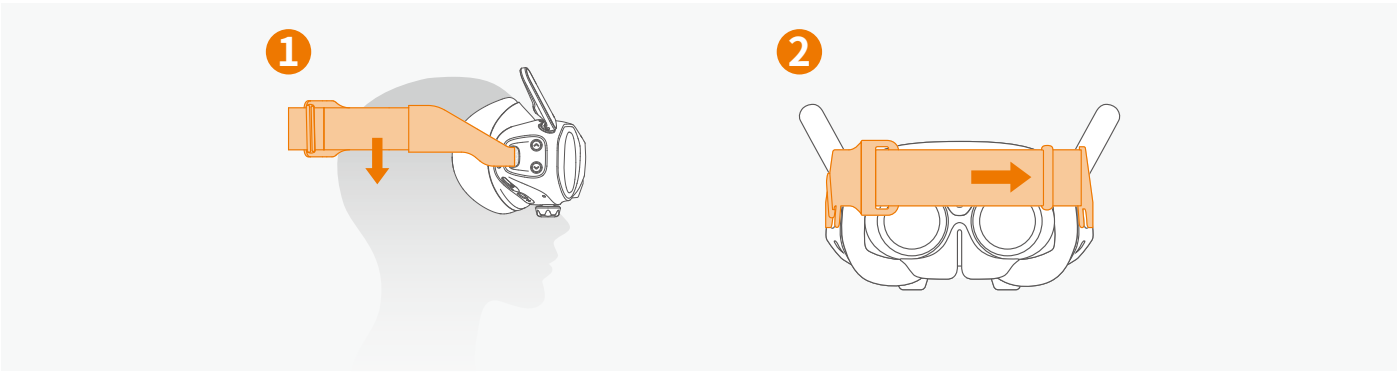

© 2025 Antigravity All Rights Reserved

6. After putting on the Vision Goggles, adjust the length of the power supply cable using the caliper on the side of the headband if needed.

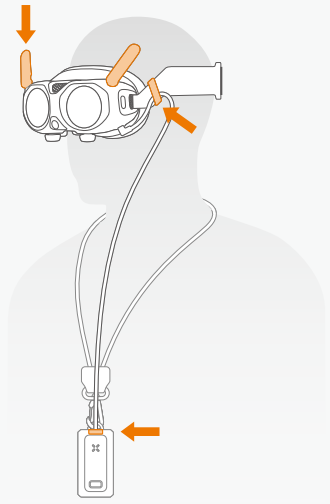

- Remove obstacles or debris around your feet before putting on the Vision Goggles to ensure safe usage.
- Before each use, ensure the connection power supply cable of the Vision Goggles is secured. Failure to do so might cause the danger during the flight.

Adjusting Lenes

If you require vision correction with the prescription ranging from +200° (hyperopia) to -500° (myopia), you need to adjust the position of the lenses in the Vision Goggles to achieve the best using experience.

1. First, slide the knobs left or right to adjust the interpupillary distance.

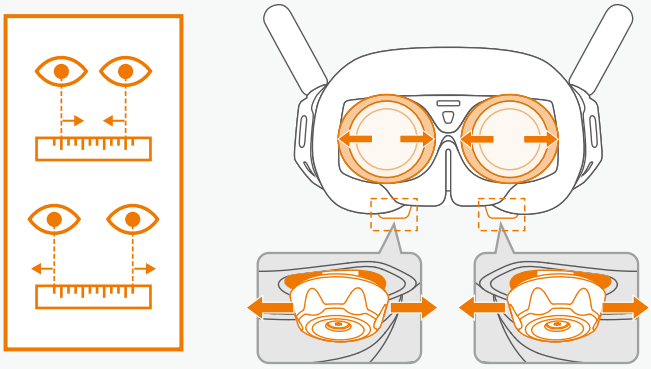

2. Rotate the knobs to adjust the diopter. The diopter adjustment range is from +200° (hyperopia) to -500°(myopia).

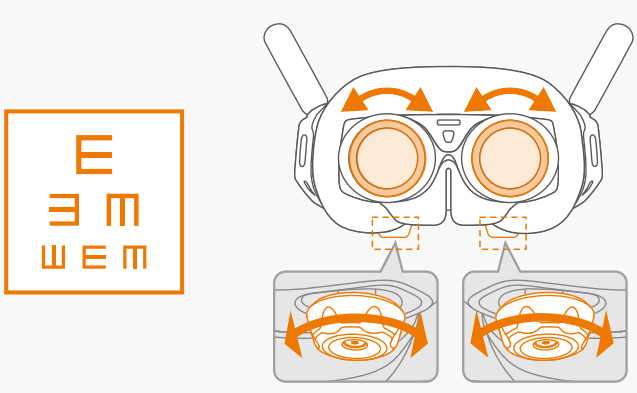

© 2025 Antigravity All Rights Reserved

· Before putting on the Vision Goggles, rotate the knobs to move the markers of lens to the approximate range of your vision correct range. Then, put on the Vision Goggles to fine-tine the diopter to achieve the optimal visual experience. Rotate leftwards for short-sighted users and rightwards for far-sighted users.

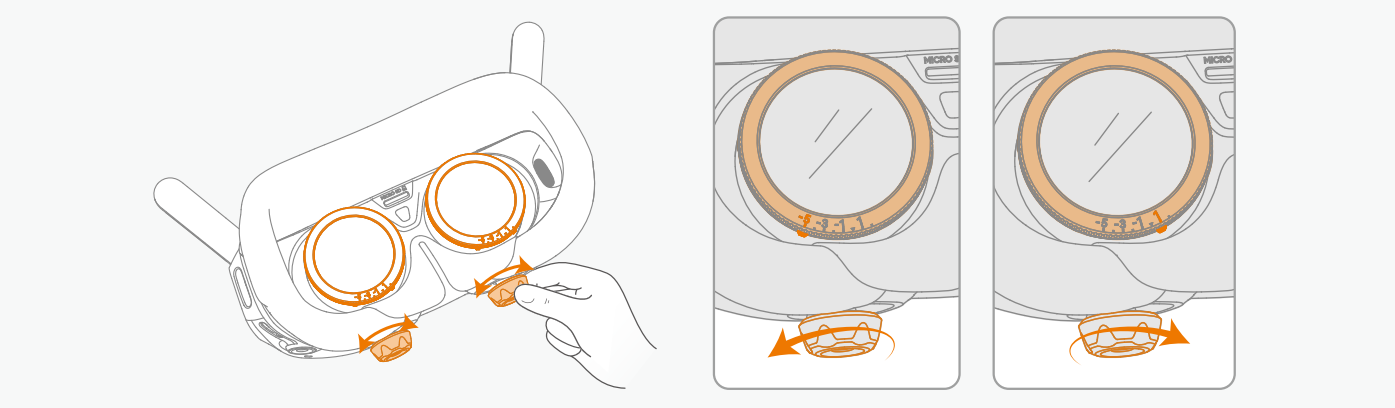

· Diopter lenses need to be purchased separately if your vision correction range exceeds +200° to -500° .

· The diopter adjustment has a limited travel range. Adjust it with gentle range and do not exceed the travel range, otherwise it may cause damage.

Using Vision Correction Lenses

If your myopia correction range is between -500° and -800° , you can attach a 300-degree myopia correction lens for the optimal using experience.

1. Rotate the lens frames counterclockwise to detach them from the Vision Goggles.

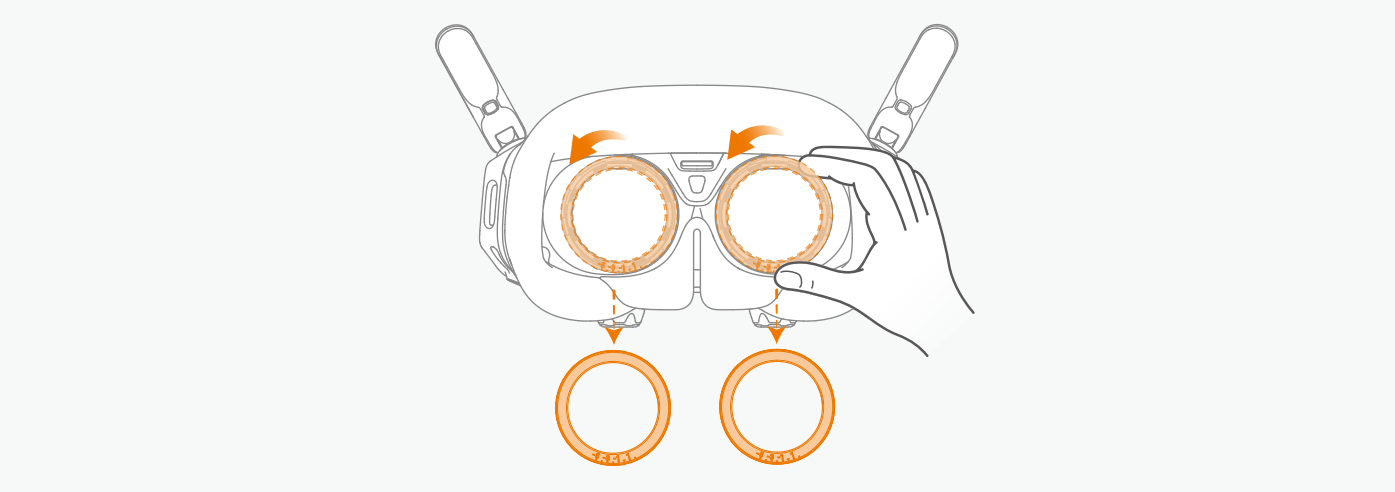

2. Peel off the protective films from the new myopia lens, and identify the left and right markings on the frame.

© 2025 Antigravity All Rights Reserved

3. Align the white dot on the lens with the white dot on the mounting base on lens barrel. Press it into place and rotate clockwise to secure its place.

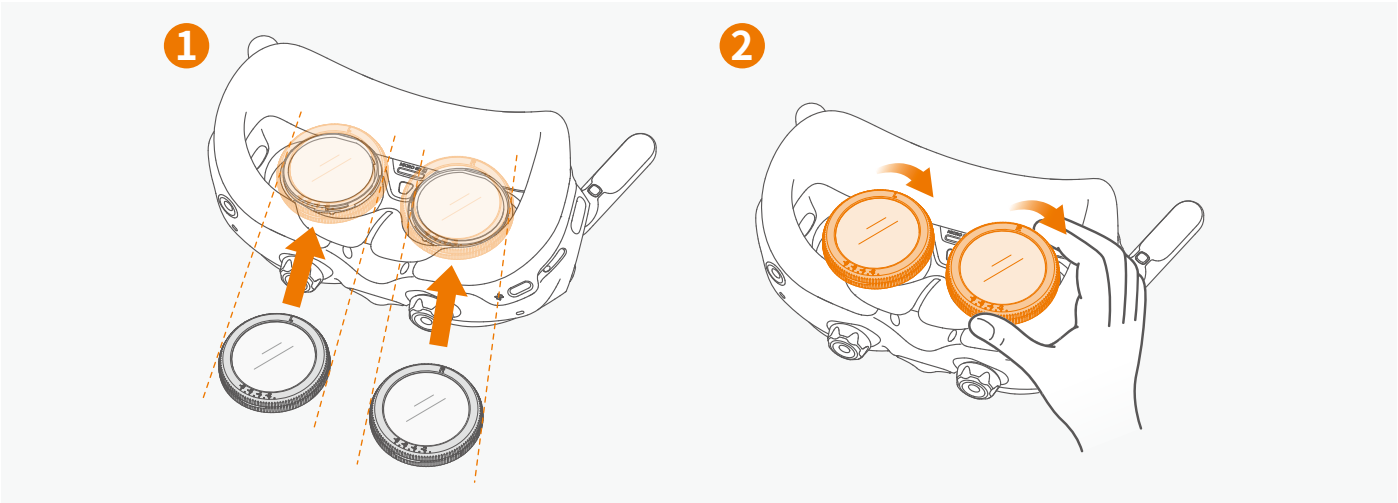

4. Before putting on the Vision Goggles, rotate the knobs to move the markers of lens to the approximate range of your vision correct range. Then, put on the Vision Goggles to fine-tine the diopter to achieve the optimal visual experience.

Spacer Bracket

The spacer bracket and foam padding on your Vision Goggles come pre-installed. You can choose to keep or remove it depending on your face shape and comfort.

Install

1. To remove the foam padding, pinch and Grip both sides of the foam padding near the nose bridge. Gently pull upward to detach the padding from the Vision Goggles.

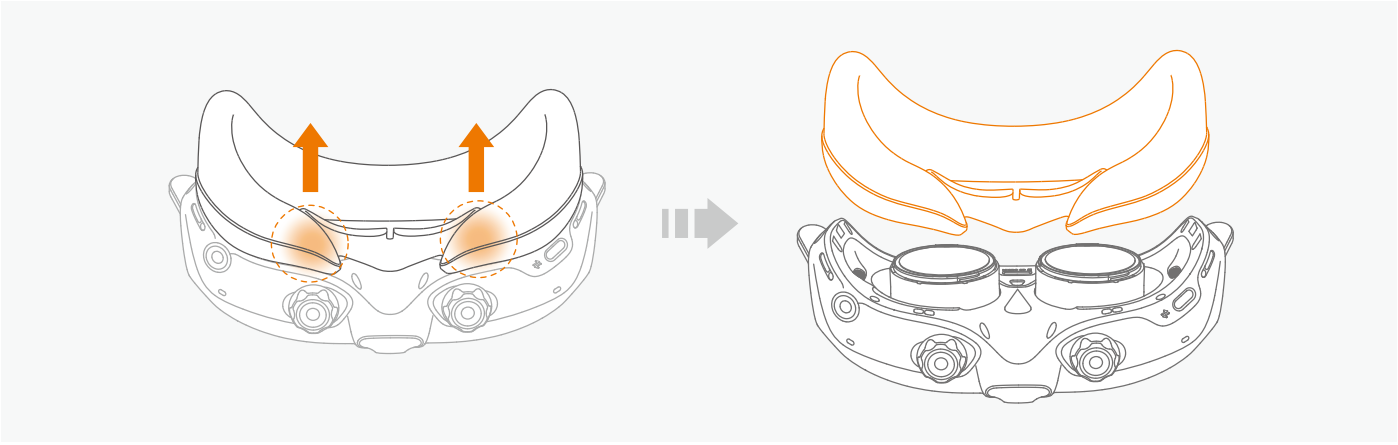

© 2025 Antigravity All Rights Reserved

2. Position the bracket so that its clips align with the slots on the foam padding. Press down on both sides near the ears until the padding clicks into place.

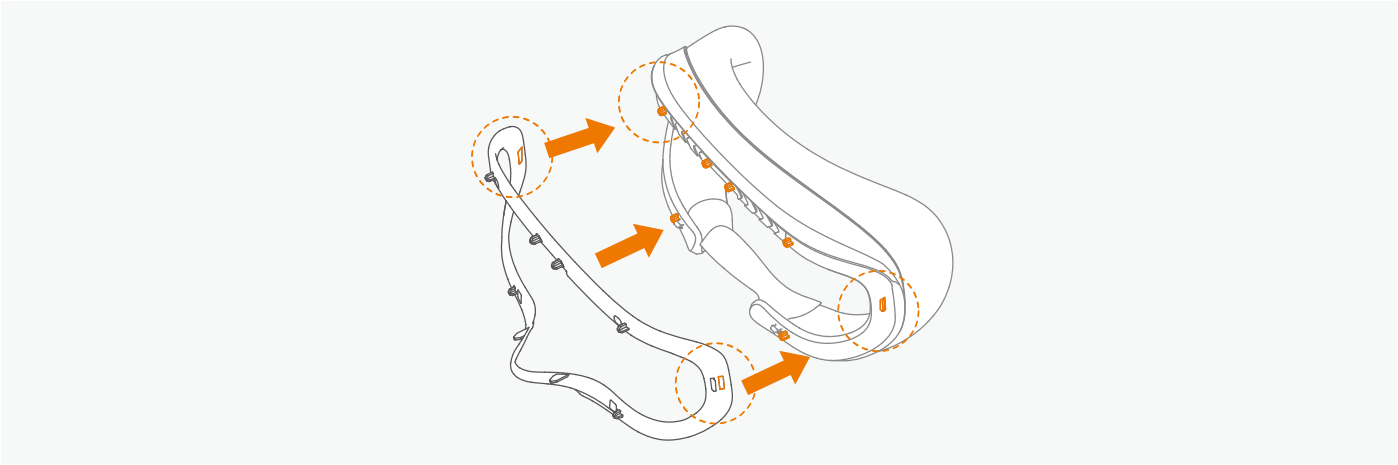

3. Position the foam padding (with the bracket attached) so that its clips align with the slots on the Vision Goggles. Press down on the nose bridge and both sides near the ears until the padding clicks into place.

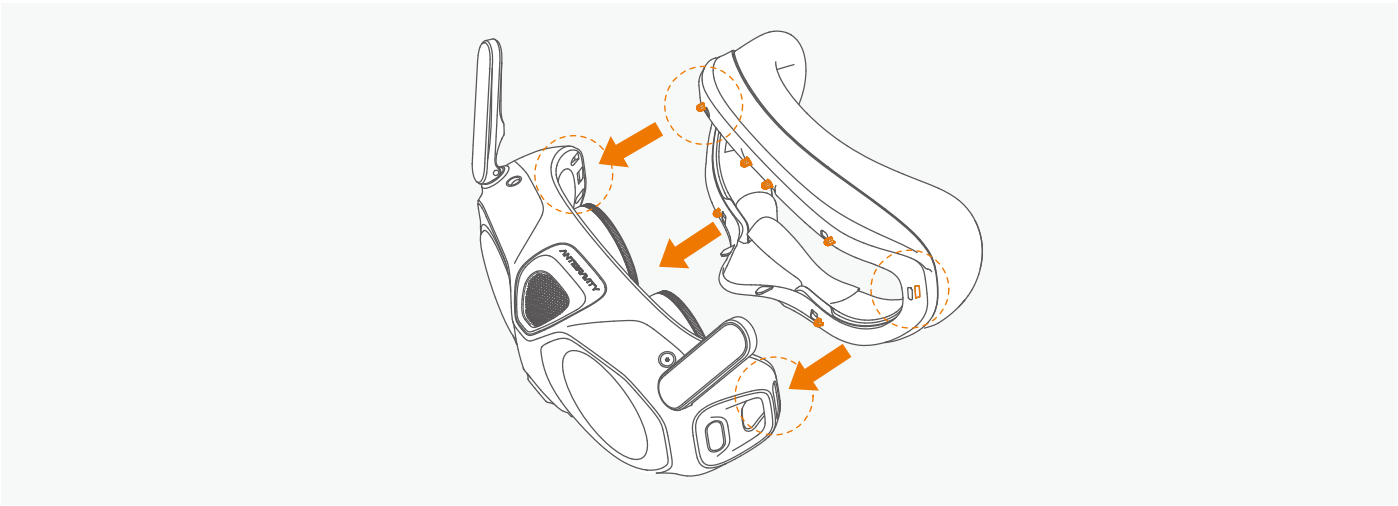

Remove

1. Removing the Foam Padding From the Vision Goggles.
   a. Grip both sides of the foam padding near the nose bridge.
   b. Gently pull upward to detach the padding from the goggles.

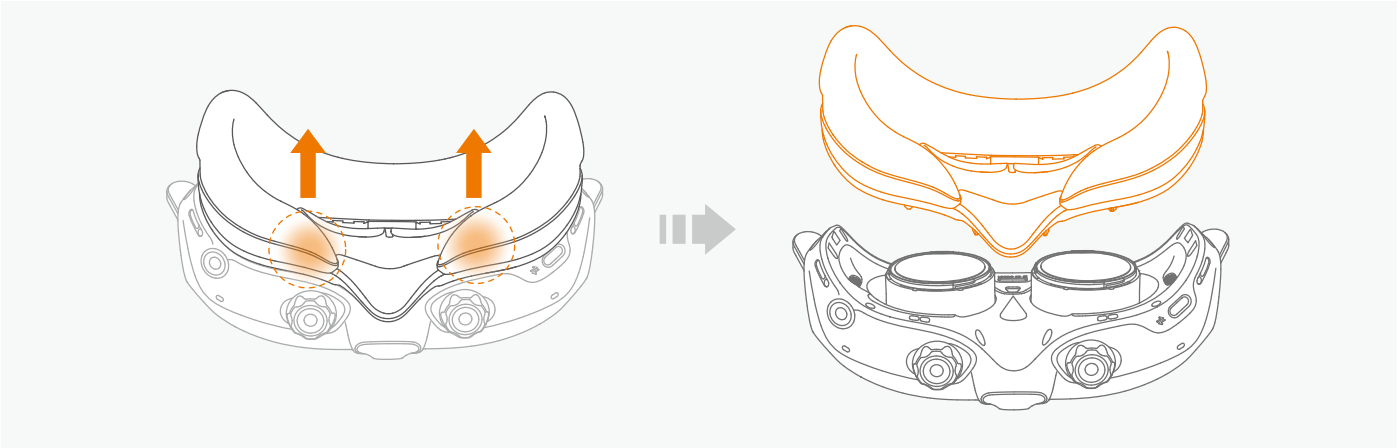

© 2025 Antigravity All Rights Reserved

2. Removing Spacer Bracket.

   a. Simultaneously push inward on both sides of the bracket.

   b. Continue pushing until the bracket disengages from the Vision goggles.

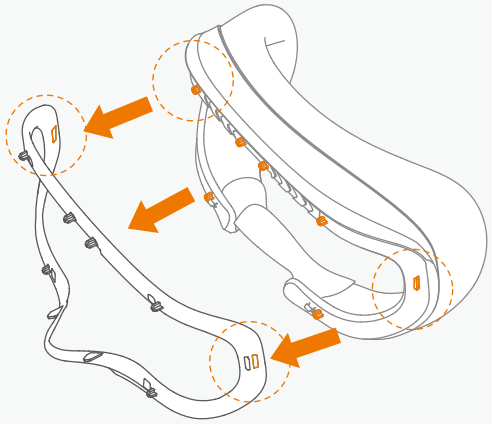

Setting Up Grip Controller

1. Press once on the power button to check the battery level.

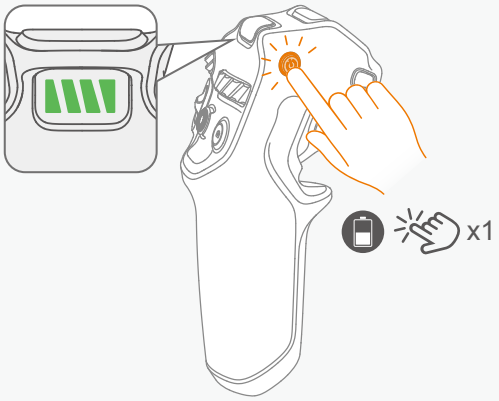

2. Connect the USB-C port to the power source to charge the Grip Controller.

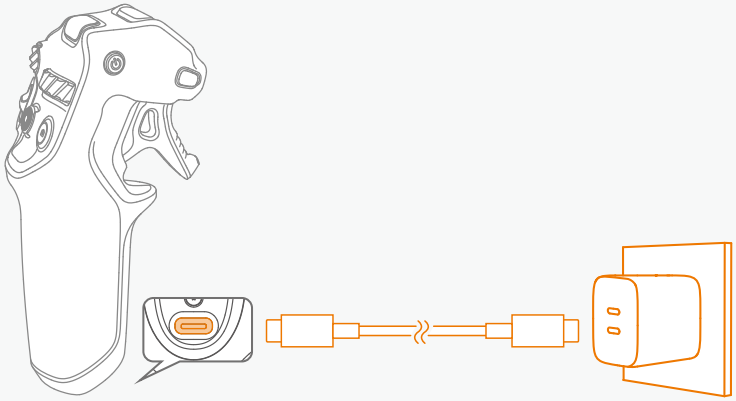

Ensure that at least three or more battery indicator LEDs are lit before the first use.

© 2025 Antigravity All Rights Reserved

Activate Your Drone

Before using the A1 drone for the first time, you will need to activate it through the Antigravity App to comply with regulations. Power on the A1 drone, Vision Goggles, and Grip Controller. Download the Antigravity App and ensure Wi-Fi is enabled on your mobile device. Follow the on-screen instructions from the App to activate your drone.

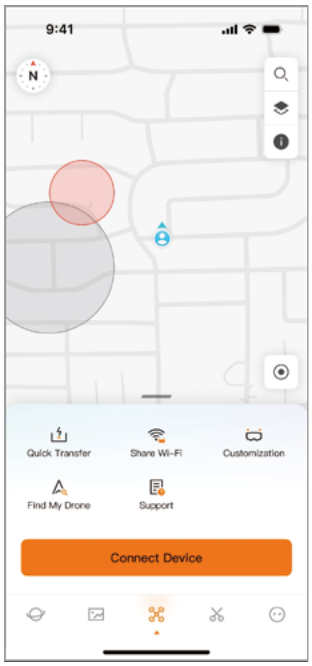

- It is strongly recommended to activate your drone in a stable Wi-Fi connected network environment. Otherwise, it may cause activation failure.
- Ensure you have easy access to personal information (e.g., ID card, passport) before carrying out the activation.
- Upon successful activation, you can proceed to product insurance service within 48 hours.
- The flight distance of the drone is limited if you fail to activate your drone.

Firmware Updates

It is important to keep your firmware up to date to ensure optimal performance and compatibility with any new features or improvements.

Make sure to regularly check for any firmware update by launching the Antigravity App, check the notifications and follow the on-screen instructions from the App or the menu of the Vision Goggles to perform the firmware update. For more information about how to update the firmware, refer to the corresponding section in the Appendix.

Linking Devices

All three devices are paired upon delivery. No linking is required under most circumstances. Linking is only required after purchasing a new devices, follow the instructions below to link the devices:

Linking A1 Drone to Vision Goggles

1. Power on both the A1 Drone and the Vision Goggles.
2. Press and hold the power button on the A1 Drone for more than 4 seconds to enter the linking state. The A1 drone will emit a beep tone and the indicator at the front will blink green.

© 2025 Antigravity All Rights Reserved

3. Press and hold the Home button on the Vision Goggles, and the Vision Goggles will enter the linking state and emit a beep tone as well.

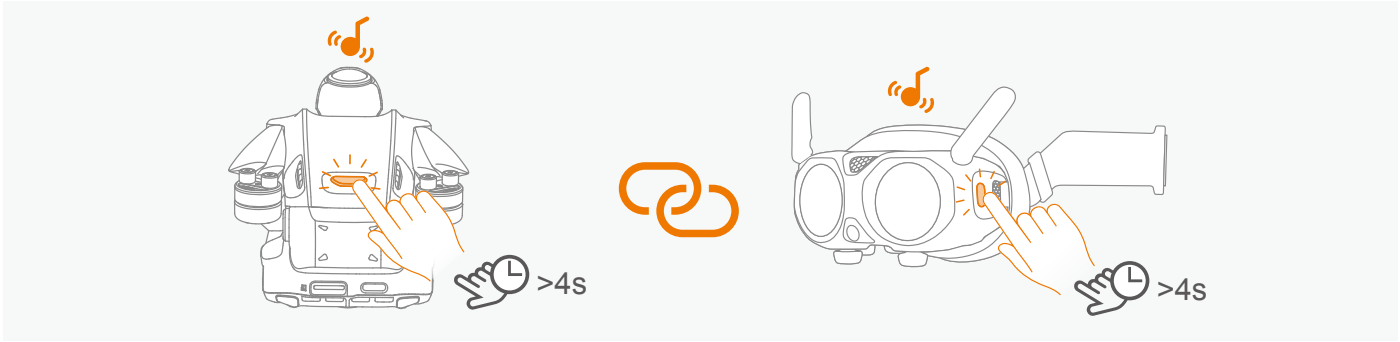

4. The user can see the live view of the drone from the Vision Goggles if the linking is successful. And the beeping tones from both the devices will stop.

Linking Vision Goggles to Grip Controller

1. Power on both the Vision Goggles and Grip Controller.
2. Press and hold the Home button on the Vision Goggles, and the Vision Goggles will enter the linking state and emit a beep tone as well.
3. Press and hold the power button on the Grip Controller, and the Grip controller will enter the linking state and emit a beep tone. The battery level indicator will start blinking in sequence.

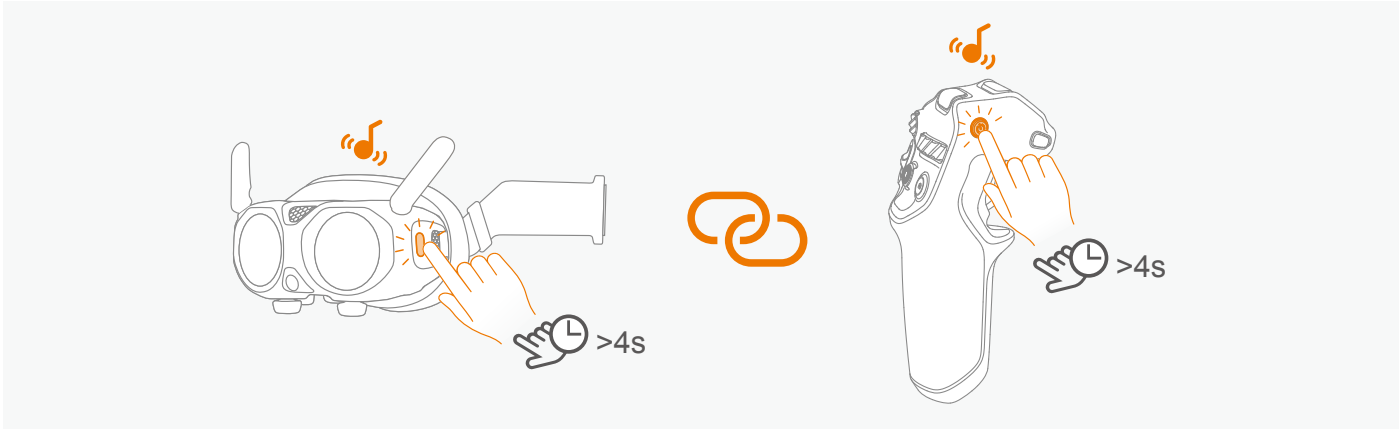

4. The user can see the navigation dot 〈 〉 from live view of the drone from the Vision Goggles if the linking is successful. Swing the Grip Controller to move navigation dot within the Vision Goggles.



Ensure that the distance between devices does not exceed 0.5 meters when started linking.

© 2025 Antigravity All Rights Reserved

Take off and Landing

This chapter provides basic instructions on how to take off and land the drone.

Pre-flight Checklist

Conduct a pre-flight inspection of your drone is an important step in safeguarding your safety and minimising the risk of accidents. Before each takeoff, be sure to follow the steps in the listed below:

1. Check if the flight battery and propellers are secured in place.
2. Check if there is any sign of damages or crack on the body of drone and on the propeller.
3. Check if the battery is fully charged for the A1 drone, Vision Goggles and Grip controller.
4. Check if the MicroSD card is installed on the drone.
5. Check that the landing gear can be lowered and retracted.
6. Check that the motor is running properly after it is unarmed.
7. Update the Antigravity app if necessary.
8. Check if there is dirt or stains on each of the sensors or camera lenses.
9. Check to verify only the officially approved accessories are installed. Unauthorized accessories installation might affect the safe use of the drone.
10. Check if the RTH height and action is set in the Vision Goggles menu. You must set the maximum altitude, flight distance limits, and RTH altitude in accordance with local regulations.

Take Off

Go through the pre-flight checklist item by item before taking off. Ensure that each step has been performed, then follow the instructions below to take off your drone.

1. Place the drone in an open, flat area with the rear of the drone facing towards you.

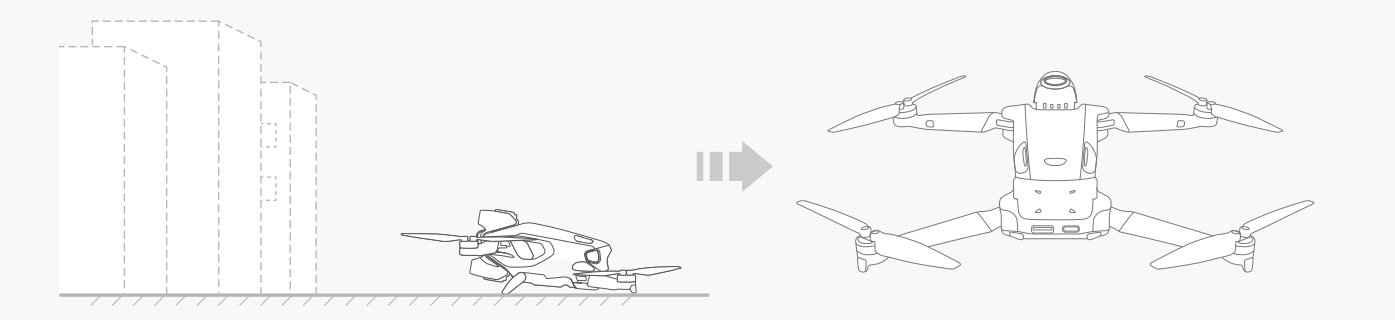

2. Power on the devices in the sequence of A1 Drone, Vision Goggle, and lastly the Grip Controller.

Press the button on the external battery to power on the Vision Goggles. Refer to the ***“Preparation for First Flight”*** section for more details.

© 2025 Antigravity All Rights Reserved

3. Place the battery lanyard around your neck as it is the recommended wearing method.



4. Extend the antenna of the Vision Goggles and ensure that the power cable of the Vision Goggles is securely connected.

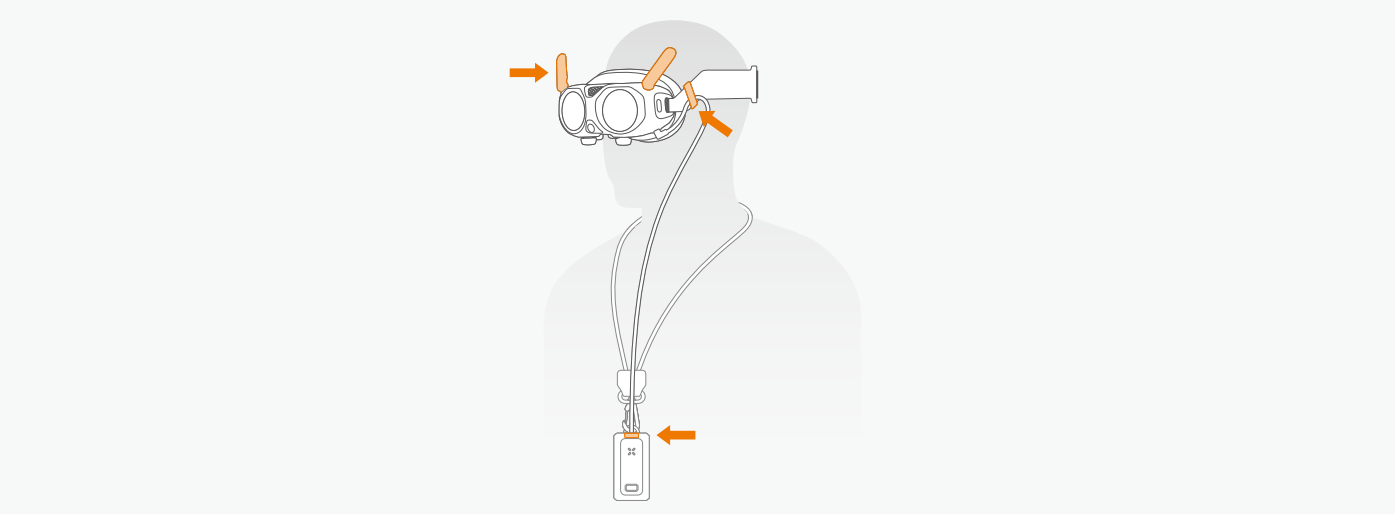

Adjust the length of the power supply cable using the caliper on the side of the headband if needed.

The Vision Goggles must be used with the power cord and battery provided by Antigravity. Do not attempt to use any third party power USB C cable or batteries to power the Vision Goggles, as this may result in serious or even irreversible damage to the Vision Goggles.

5. Set appropriate return and obstacle avoidance config in the "Safety Settings" of the Vision Goggles. Set the "Signal Lost Behavior" and "Obstacle Avoidance Behavior" to "Hover" or "Brake". Ensure that the "RTH Altitude" is set appropriately. It is recommended to set the RTH altitude significantly higher than the tallest nearby building.

Before putting on the Vision Goggles, we suggest familiarizing yourself with the button locations on the Grip Controller through the official documentation or video tutorials.

6. Wait for the drone's self-check to complete. If no warnings are displayed in the Vision Goggles, you can then unlock the motors.

© 2025 Antigravity All Rights Reserved

7. Push up the flight slider in two short bursts to unlock the motors, putting them into idle mode. The drone will now be ready to take off.

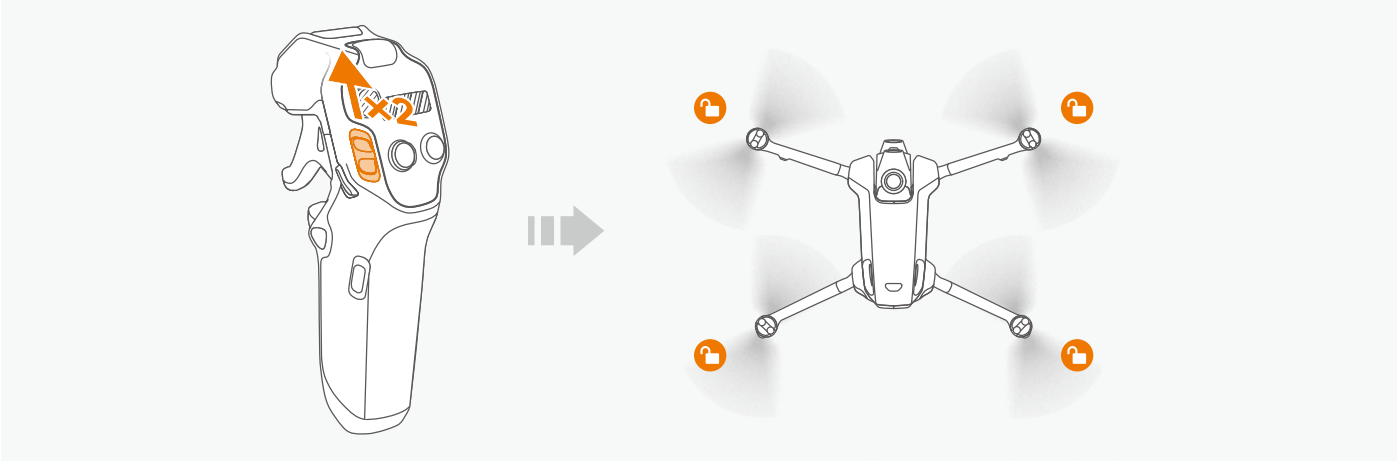

8. Slowly push up the flight slider, the drone will take off and climb slowly to 1.2 meters (3.9 ft) and hover.

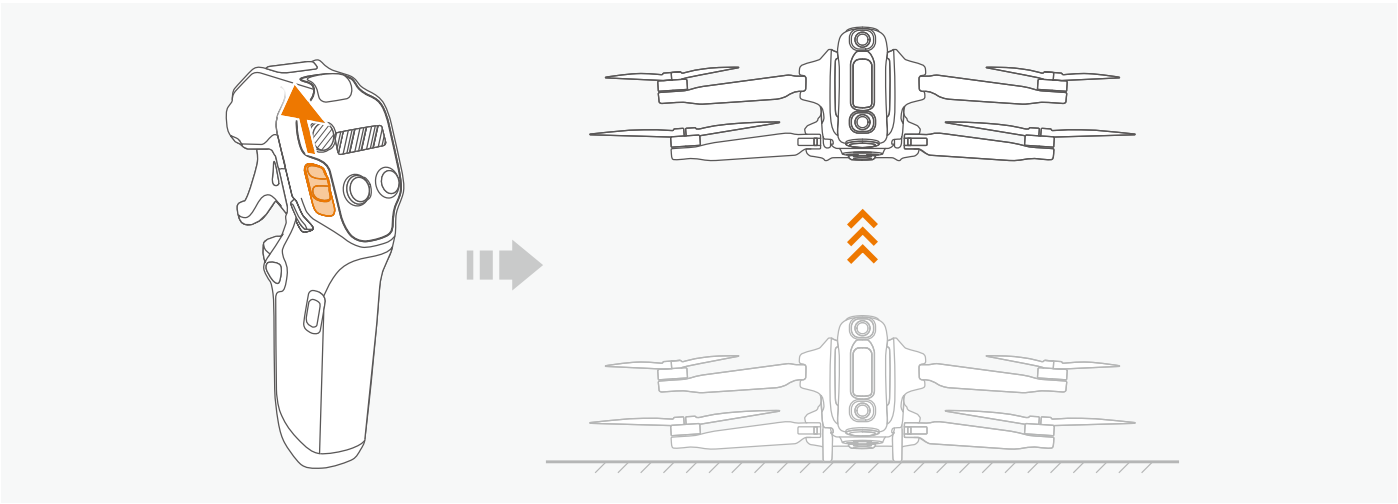

Landing

The drone can return and land on its recorded Home point either automatically or manually. This chapter describes the procedure on how to land your drone safely by your Grip controller.

Auto Landing

1. Press the RTH button on the Grip Controller for more than 2 seconds, the drone will proceed to RTH and land.

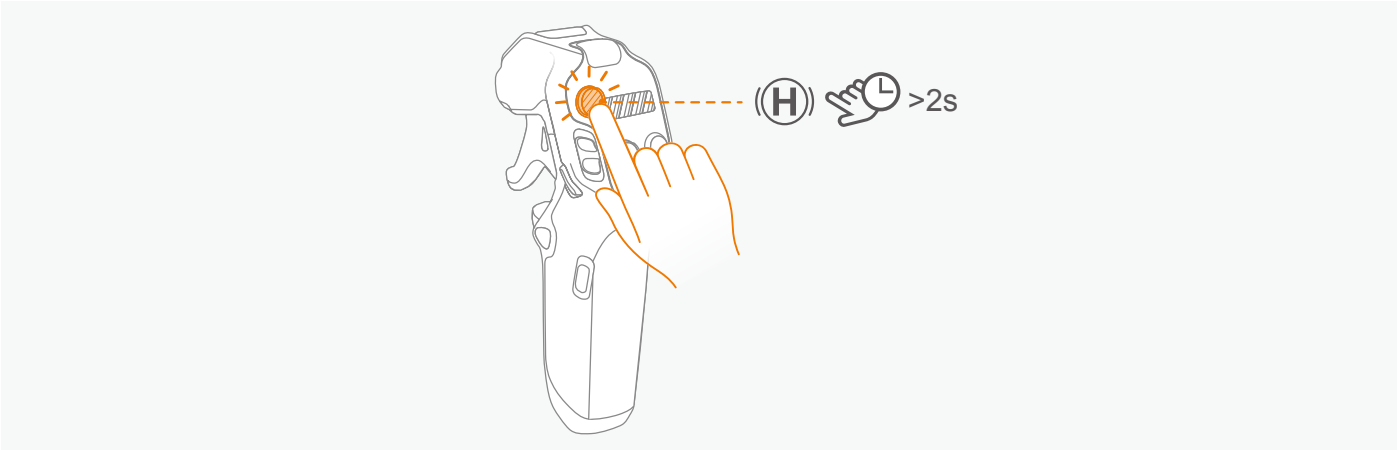

© 2025 Antigravity All Rights Reserved

Make sure the Home point is recorded before activating the RTH. Do not activate the RTH if the Home point is refreshed and recorded in an unsuitable area (e.g., near water)

2. After the Return to Home (RTH) is activated, your drone will change its heading and start to fly back to its Home point at the pre-determined RTH altitude and attempt to land itself.

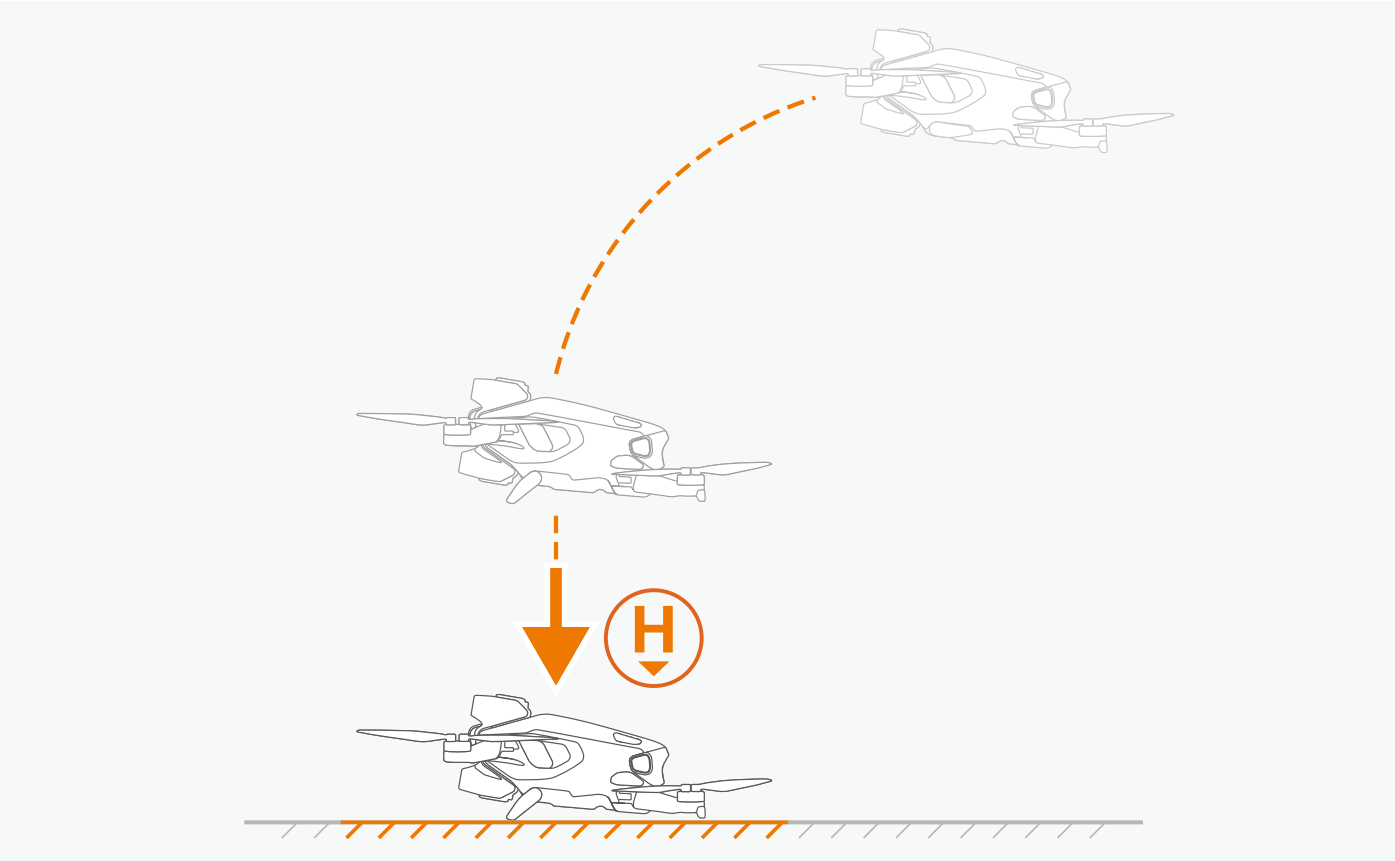

3. After landing at the Home Point, the drone will stop its propellers on its own.

Upon landing is complete, it is advised to power off the A1 drone first then the Vision Goggles and Grip controller. Otherwise it may trigger the RTH signal lost alarms.

Landing Protection

When the drone is in automatic Return-to-Home (RTH) mode or in the midst of landing, the landing protection automatically activates to ensure a safe landing. Follow these tips while the drone is landing:

1. If the landing area is well-lit and the conditions are detected as suitable for landing, then landing protection will engage and run in the background to land the drone automatically.
2. When landing protection is engaged and the drone determines that the landing area is unsafe for landing (e.g., uneven ground or water surface), the drone will abort landing, hover, and await user input.
3. If landing protection is disengaged, the drone will still perform RTH until it descends to 0.25 m (0.82 ft) above the ground, the Vision Goggles will prompt the user whether they wish to proceed with landing. Once confirmed, push down the landing slider to land your drone.

© 2025 Antigravity All Rights Reserved

- Landing protection assists in judging the landing environment. However, user discretions on whether the landing environment is suitable for lading are still required.
- The performance of the landing protection is subject to external environments. Due to the system limitation, the drone will keep descend and land in the below scenarios:
  a. The terrain below the drone is characterized by a solid color, lack of distinct texture, dynamic texture, reflection, or dimly lit area. For instance, when the landing site is a tiled ground, dimly lit garage floor, or swaying green field.
  b. When obstacles are present at the landing site, and the obstacle is characterized by a lack of distinct features, reflective, and monochromatic color. For instance, obstacles such as rocks or protruding tiles.
  c. There are small obstacles below the drone, such as wires, small tree branches.
  d. A flat scene below the drone, such as trimmed bushes, flat tree tops, or hemispherical shapes.
- In the following scenarios, landing protection may not be operational , and the Vision Goggles will prompt the user that landing is aborted:
  a. The terrain below the drone resembles a body of water (such as wet ground, flooded ground).
  b. Textured non-flat areas (slopes, steps, etc.) appear in the flat area around the drone, such as a monochromatic color car roof or small table.

Precision Landing

The drone will scan and attempt to match the terrain during the RTH process. When the drone determines that the current terrain matches the recorded Home point, it will land with precision. It is recommended to follow the steps below for optimal performance of precision landing.

1. First, ind a spot that you think is suitable for takeoff. Place your drone on the ground first. Then power on the drone and allow it to search for GNSS signals.

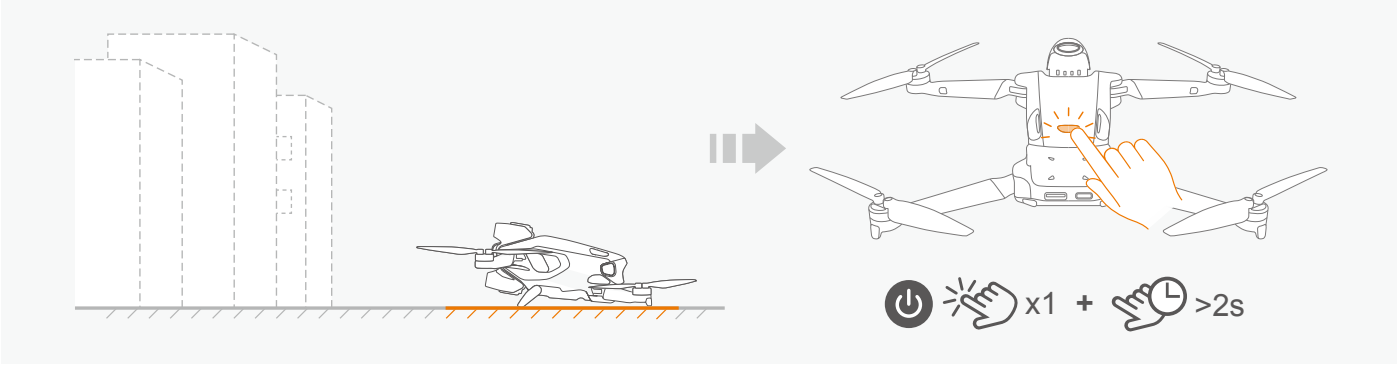

© 2025 Antigravity All Rights Reserved

2. After the GNSS signals are obtained and the Home point is recorded, proceed to the takeoff operation. During takeoff, you must ascend the drone vertically for at least 6 meters above the ground, and then fly horizontally.

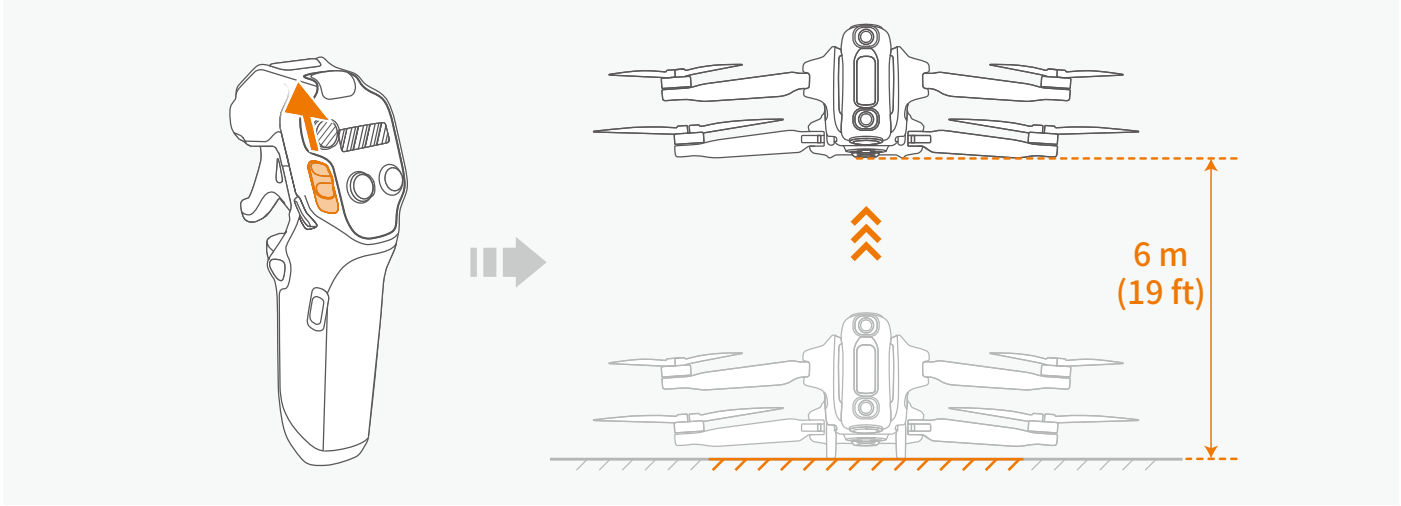

3. When executing RTH, the drone will then return and land at the Home point with high precision.

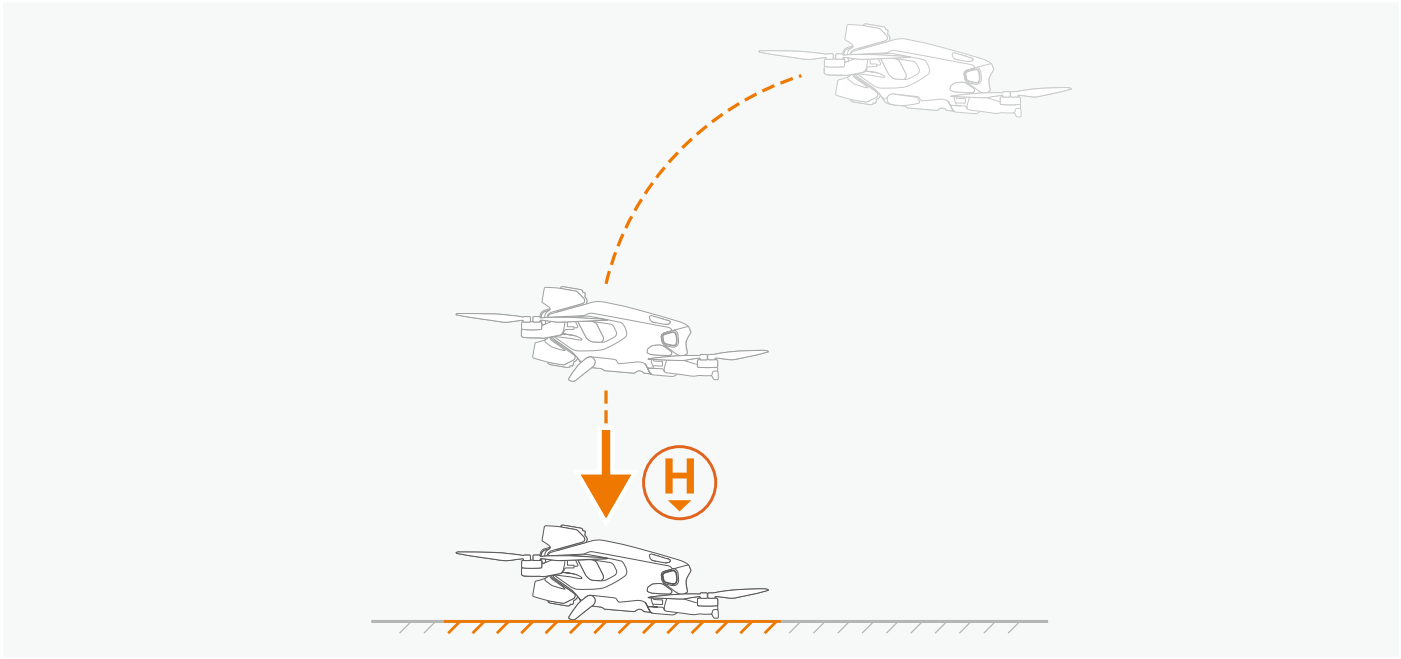

⚠ · The performance of Precision Landing is limited by the following conditions:

a. The home point must have been successfully recorded during takeoff and must not be changed during the flight.

b. During takeoff, the aircraft must first ascend vertically at least 6 meters (19 ft) before flying horizontally.

c. The terrain features of the Home point must remain largely unchanged.

d. The terrain features of the Home point must be sufficiently distinct. The performance of Precision Landing will be affected when flying in scenes such as snow-covered areas.

e. The lighting conditions near the Home point are too bright or too dark.

© 2025 Antigravity All Rights Reserved

Manual Landing

1. In the absence of a GNSS signal, users can still manually control the drone to fly back to the vicinity of the return point.
2. Control the drone's movement and guide it to an open, flat ground for landing. Release the throttle trigger of the Grip Controller, then the drone will hover above the landing area.
3. Push the unlock slider downwards and then drone starts landing.

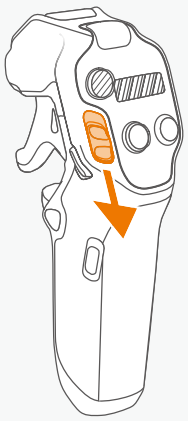

4. Tilt your line of sight downward to locate the suitable landing area when the drone is approaching the Home point. Point the Grip Controller towards the landing area and hold onto the throttle trigger.

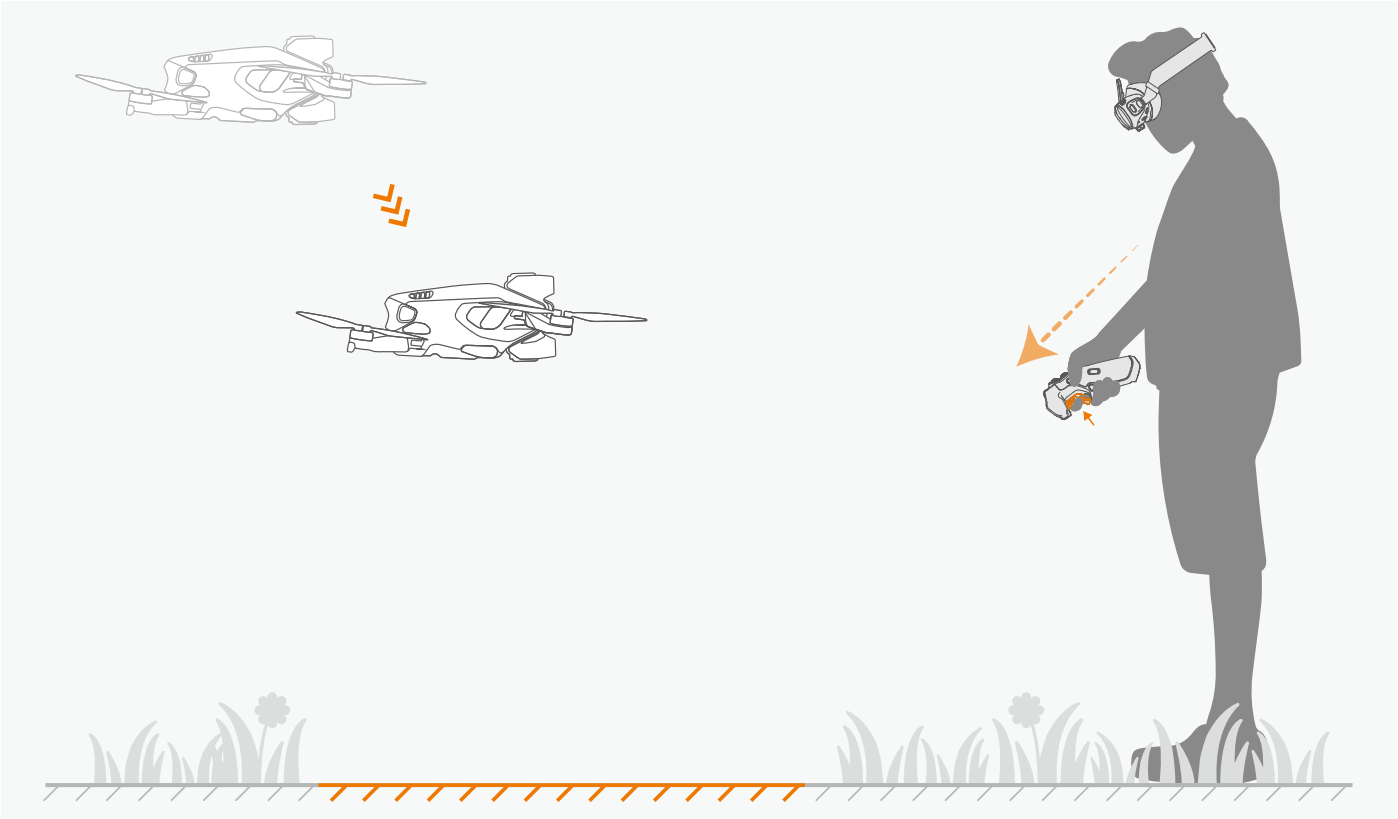

© 2025 Antigravity All Rights Reserved

5. The drone descends to 1.2 meters (3.9 ft) above the ground, the landing gear will automatically lower to prevent scratching the camera lenses during landing.

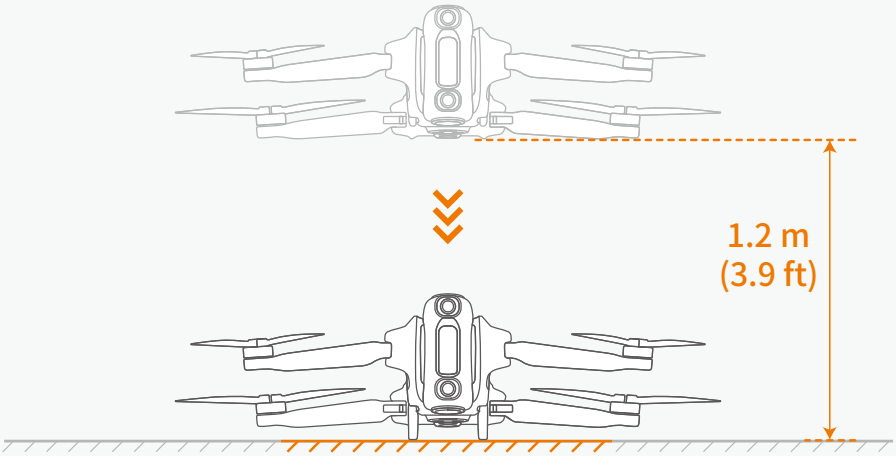

Post Flight Check List

1. Inspect the flight battery and the propeller, ensure there is no visible damage.
2. Brush off the dirt and stains on the camera and sensor lenses by using the official cleaning wipe.
3. Ensure the landing gear is retracted. Manually retract them if required.

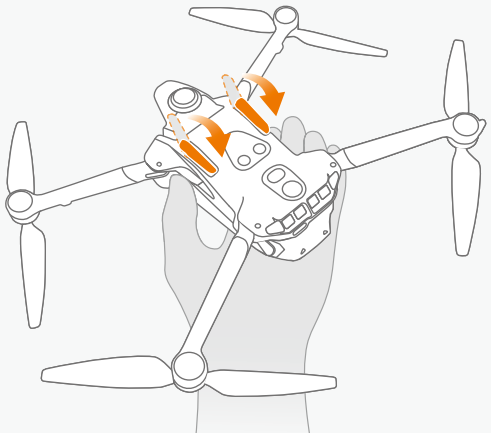

Landing gear must be retracted; otherwise, you will not be able to place the drone into the storage case.

4. After powering off the drone, ensure that all four arms are folded.
5. After powering off the drone, ensure that the antennas on the Vision Goggles are folded.
6. Your flight battery will hibernate when stored for an extended period. Charging your battery at intervals is recommended to allow the battery to exit from hibernation.
7. Store the drone, controller, batteries, and battery charger in a dry environment. The recommended storage and transportation temperature range is between 15°C (59°F) to 25°C (77°F) with an approximate humidity of 40%. No altitude restriction is imposed.

After using the drone in a humid or rainy environment with condensation, make sure to let it sit or dry at low temperature before storing to prevent moisture from affecting the lens on the drone.

© 2025 Antigravity All Rights Reserved

8. Before servicing the drone (such as cleaning or installing propellers), be sure to remove the battery first. Use a soft cloth and the official lens cleaning cloth to remove any dirt or dust, ensuring the drone and propellers are clean. Do not clean the drone with a wet cloth, and avoid using alcohol-based cleaners. Liquid may leak into the drone's shell, causing a short circuit and damaging electronic components.
9. When replacing or inspecting the propellers, be sure to unplug the flight battery first.

Flight Safety and Control

Flight Environments Requirements

1. Do not operate in severe weather conditions, such as strong winds (wind speed 10.7 m/s (23.2 mph)and above), snow, rain, fog, etc.
2. Do not use the drone in high-temperature, flammable, and explosive environments.
3. Choose an open area with no tall buildings or structures nearby. As the presence of large amount of steel reinforcement will affect the operation of the on-board compass and block GNSS signals, resulting in poor positioning performance or even the inability to locate the drone. Therefore, do not take off on a balcony or within 10 m (32 ft) of a building, and it is recommended that the steer the drone at least 10 m (32 ft) away from buildings during flight.
4. If the Home point is set close to buildings or highrises, the accuracy of the Home point may degrade. Therefore, during the automatic RTH process, always keep an eye on the current position of the drone. When the drone approaches a building or highrises, it is recommended to exit from the automatic RTH and land the drone manually in the final phase of RTH.
5. When operating in high-altitude areas, due to environmental limitations, the performance of the battery and motors will be impacted, and flight performance will be affected. Please fly with caution. For the drone with the standard flight battery, the maximum takeoff altitude is 4000 m (13,123 ft). For the drone with a high-capacity flight battery, the maximum takeoff altitude is 3000 m (9,842 ft). Do not attach the propeller guard to the drone when using the high-capacity flight battery as the payload is significantly changed.
6. The braking distance of the drone is affected by the altitude of the flight environment. The higher the altitude, the greater the braking distance required. When operating in areas with an altitude greater than 3000 m (9,842 ft), users should reserve at least 20 m (65 ft) of vertical braking distance and 25 m (82 ft) of horizontal braking distance to ensure flight safety.
7. Maintain line-of-sight control, stay away from obstacles, crowds, water surfaces, and stay at least 3 m (9.8 ft) away from the water surface.
8. Maintain safe altitude from the water surface or the ground when operating your drone.
9. Do not fly in areas with high-voltage power lines, communication base stations, or transmission towers to avoid interference with the Grip Controller.
10. The GNSS positioning system is not operational for flights within the Arctic and Antarctic Circles. However, you can still use the vision positioning system for stabilization.
11. Do not takeoff on the surface of moving objects (such as moving cars, boats) or inclined surfaces. When taking off, be sure to choose a stationary horizontal platform.
12. Do not take off on the surface of solid-colored objects or objects with strong reflections (such as the roof of a car).
13. Operate the drone, Grip Controller, battery, battery charger, and battery charging hub in a dry environment.

© 2025 Antigravity All Rights Reserved

Flight Protection

Flight Protection Area

The flight protection system designates safe flying locations, provides flight risk assessment and safety tips for your flights, and offers information on controlled airspace. Drone cannot take off from or fly into the protection area, hence, it is important survey the area before you attempt to operate your drone. Users can check if their locations are near the flight protection zones using the Antigravity app. The system restricts takeoff and flight in areas that may pose safety or security risk to others. For the policy regarding flight protection areas, visit the official website (*https://www.antigravity.tech*).

Flight Protection Map

The geographic information is available in the Antigravity app. View this information from the bulit-in map of the Antigravity app before each flight. You should confirm that the planned take-off spot is not within or adjacent to a flight protection area. Otherwise, you will not be able to fly your drone near the planned take-off spot. Users can also use the offline map function of the Vision Goggles to browse the location of these flight protection areas.

Flight Altitude and Distance Restriction

Flight Restriction

A flight restriction is set by default in order safeguard the safety of users and general public. This section will provide information about how to config the flight restriction.

You can set the flight altitude and distance restrictions from the Vision Goggles menu. Once you have completed the setting of the restriction values, a virtual cylinder that comprises flight altitude, distance, will be in effect to restrict where the drone can fly. If the GNSS system is not operational, the flight distance restriction is disabled, but only the flight altitude is restricted.

Flight Altitude and Flight Distance Restriction

· Strong GNSS Signal

The maximum altitude determines the maximum flying height of the drone from the Home point, and the maximum distance determines the farthest flying distance of the drone from the Home point. Users can set these two values in the Vision Goggles.

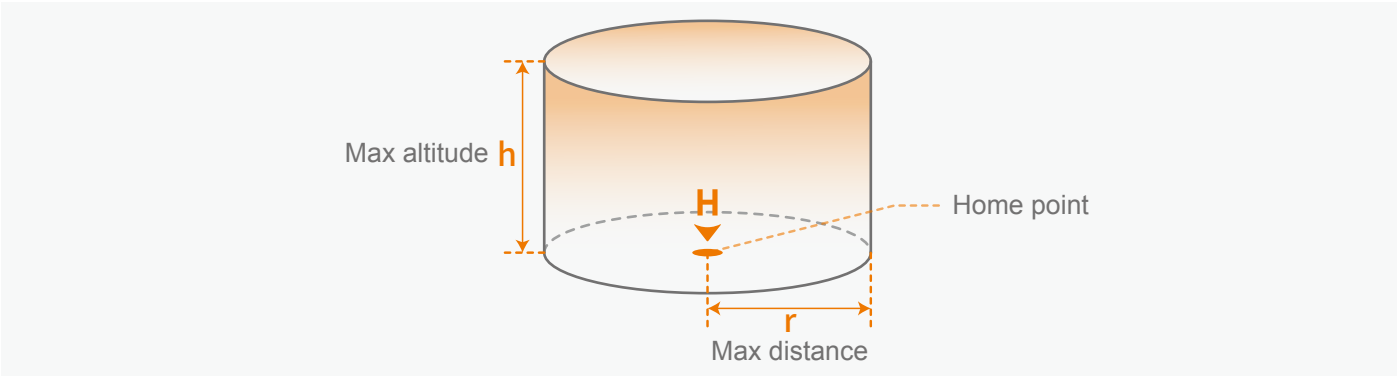

· Weak GNSS Signal

The maximum altitude of the drone will be affected by factors such as ambient light, particularly when the GNSS signal is weak.

- When the ambient light is normal and the GNSS signal is strong, the maximum altitude is around 10 m (32 ft).
- When the ambient light is dim and the GNSS signal is weak, the maximum altitude is around 2 m (6 ft).

⚠ It is possible that the drone will fly beyond the restricted flight range due to inertia. The user can still control drones in this instance. However, you should control your drone to fly back into the safe area.

© 2025 Antigravity All Rights Reserved

Flight Safety Best Practice

Follow the best practices below to avoid serious personal injury or causing property damage.

1. Ensure that you are not under the influence of anesthesia, alcohol, or drugs, and do not experience dizziness, fatigue, nausea, or any other conditions that may affect the safe operation of the drone.
2. When landing, first turn off the drone's power, then turn off the remote controller.
3. It is strictly prohibited to throw, launch, or otherwise project any dangerous payload towards any buildings, individuals, or animals to prevent personal injury or property damage.
4. Do not use a drone that has been involved in a collision, accident, or is in poor condition.
5. Ensure adequate training and establish emergency plans for emergencies or accidents.
6. Develop a flight plan and avoid reckless driving of the drone.
7. When using the filming function, respect the privacy of others and ensure compliance with local privacy laws, regulations, and ethical standards.
8. This product should only be used for general personal use, and not for any other purposes.
9. Do not use it for illegal or improper purposes, such as espionage, military operations, or unauthorized investigations.
10. Do not use this product to defame, insult, harass, track, threaten others, or in any other way infringe on the legitimate rights such as privacy rights and publicity rights of others.
11. Do not use the drone to trespass into others' private property.



- Do not approach the rotating propellers or motors. Do not attempt to catch the drone while it is hovering in the air by hands, and do not attempt to hold the drone in the palm of your hand for takeoff or landing operations.
- Before takeoff, ensure that all devices are fully charged and that there is no visual damage or cracks to the propellers.
- Familiarize yourself with each flight mode by reading the official user documentation or watching videos tutorials, and understand the return-to-home procedure.
- Upon receiving the low battery warning from the device, user shall immediately return the drone to its home point.
- During automatic return-to-home, maintain the flight speed and altitude for a safe return.
- Ensure the connection between the vision goggles and the battery is secure at all times; otherwise, it may cause disruption while in use.

© 2025 Antigravity All Rights Reserved

RTH and Obstacle Avoidance Safety Notice

Return to Home (RTH)

- During the RTH, your drone will automatically adjust its flight speed to account for external factors such as wind speed and obstacles, making necessary changes of heading to navigate around obstacles on its flight path.
- The accuracy of the RTH is dependent on GNSS signal strength. Hence, if the GNSS signal is interfered with, your drone may not be able to fly back to its recorded Home point.
- If possible, only activate the RTH in an open area as the obstacle sensors cannot detect small objects like branches or power lines while the RTH is in process.
- Configure the Advanced RTH mode setting to preset mode if there are power lines or tall towers along the RTH path that the drone cannot bypass, ensuring that the RTH altitude is set higher than all surrounding obstacles.
- During the RTH process, the RTH point, RTH altitude, and RTH behavior cannot be updated on the fly. It is important to set appropriate RTH parameters before each takeoff.
- If the refreshed maximum altitude is set below the current altitude during the RTH process, the drone will first descend to the newly set maximum altitude and then continue the flight.
- The RTH altitude cannot be changed during the RTH process.
- If there is a significant deviation between the current altitude and the preset RTH altitude, it is likely that the drone cannot accurately estimate the power consumption due to different wind speeds at different altitudes. Pay extra attention to the diminishing battery level and warning messages on the Vision Goggles in this scenario.
- During Advanced RTH, if the ambient lighting conditions are poor, the drone will enter a preset RTH mode. In this case, the drone cannot bypass obstacles. Before entering the RTH mode, the correct RTH altitude must be set.
- During Advanced RTH, users can adjust the flight speed of the drone but not the heading of the drone using the Grip Controller. Holding down the throttle trigger will deplete the flight battery and reduce the possibility of bypassing the obstacle on the RTH path.
- In the preset RTH process, if the drone reaches the height limit of the current position or RTH point during ascent, the drone will stop ascending and return to the Home point at the current altitude. Pay attention to flight safety during the RTH process.
- If the recorded Home point is in a altitude restricted area but the drone is not in that area during the RTH, then when the drone entered the altitude restriction area, it will first descend to comply with altitude restriction, which may be lower than the pre-set RTH altitude. Fly with caution.
- During advanced RTH, the drone will avoid any flight protection areas while flying forward. Fly with caution.
- The drone will abort the RTH if it fails to determine whether it is safe to fly when the surrounding area is too complex.
- Before each flight, set the appropriate RTH altitude based on the surrounding environment. Enter the settings menu on the Vision Goggles and set the RTH altitude. The default RTH altitude is 80 m (262 ft).
- If the vision system is unavailable, the drone will not avoid obstacles during the RTH process.
- Flight protection areas may affect the flight path of drone during the RTH. Avoid flying near flight protection areas.
- The drone may not be able to return to the Home point in the strong wind environment. Fly with caution.
- During the RTH, pay extra attention to small objects (such as branches or power lines) or transparent objects (such as water or glass). In emergency , abort the RTH and manually land the drone.

© 2025 Antigravity All Rights Reserved

Obstacle Avoidance Safety Notice

- Be aware of the surroundings of the flight site at all times. Since the performance of the obstacle avoidance system is affected by ambient lights and other factors and cannot replace manual control and judgment, stay alert to the drone's movements during the flight.
- When the GNSS signal is weak, the drone is flying at 0.5 to 10 meters (1.6 to 32.8 feet). The downward vision system works best in this range. If the drone flies higher than 10 meters (32.8 feet), visual positioning may be degraded. Fly with caution.
- In dimly lit environments, even with the landing light turned on, the visual system may still not achieve optimal performance, so fly with caution.
- When flying near the water surface, the downward vision sensor system may not work properly. This could make it challenging to avoid the water surface during landing. It is important to maintain control of the drone, assess the surroundings, and not rely too much on the vision system for stabilization.
- The vision sensors cannot identify large structures with frames and wires, such as tower cranes, high-voltage transmission towers, high-voltage power lines, cable-stayed bridges, and suspension bridges. Do not operate near these structures.
- The visual system may not work effectively near surfaces with no distinct patterns, or in areas with low or high lighting. Exercise caution when operating your drone in the following scenarios:
  a. Flying over the monochrome surfaces.
  b. Flying over the highly reflective surfaces.
  c. Hovering or fly over the water or transparent surfaces.
  d. Landing on the moving surfaces or objects.
  e. Flying over areas with drastic changes in light.
  f. Flying over extremely dark (< 15 lux) or bright (> 40,000 lux) surfaces.
  g. Fly over reflective surfaces or surfaces that absorb infrared waves, such as mirrors.
  h. Fly over surfaces with no distinct pattern or texture.
  i. Fly over surfaces with repetitive identical patterns or textures, such as tiled designs.
  j. Fly into obstacles with small reflective surfaces, such as branches or power lines.
- Keep the camera and sensors clean. Keep the lenses away from scratches. Do not attempt to modify the lenses. Do not use the drone in dusty or humid environments.
- Do not fly on rainy or foggy days, or when visibility falls below 100 meters (328 feet).
- Before each takeoff, ensure to check the following items:
  a. Make sure there are no stickers or stains on the sensors of the infrared and vision systems.
  b. Clean the sensors of the vision and infrared system. Remove any residue such as dirt, dust, or water. Use a dry cloth for cleaning and avoid alcohol-based lotions as a cleaning agent.
- Remain vigilant and fly with caution when operating your drone at night, as the vision system performance is degraded in low light conditions.

© 2025 Antigravity All Rights Reserved

How to Control Your Drone

Basic Operations

Use the combination of ❶ throttle trigger, ❷ flight slider, ❸ 360 dial view, and ❹ emergency brake/RTH button on the Grip Motion Controller to control the attitude and flight speed of the drone, and adjust the orientation of the drone by swinging the Grip Motion Controller.

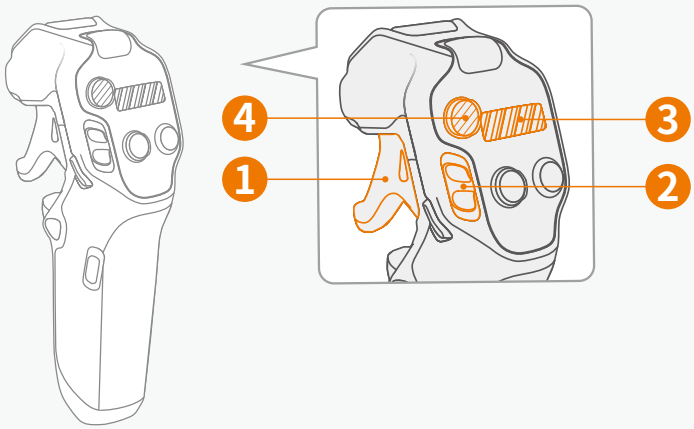

Horizontal Flight

Use the throttle trigger on the Grip Motion Controller to control the drone's horizontal speed.

- When the throttle trigger is released, the drone hovers at the current altitude.

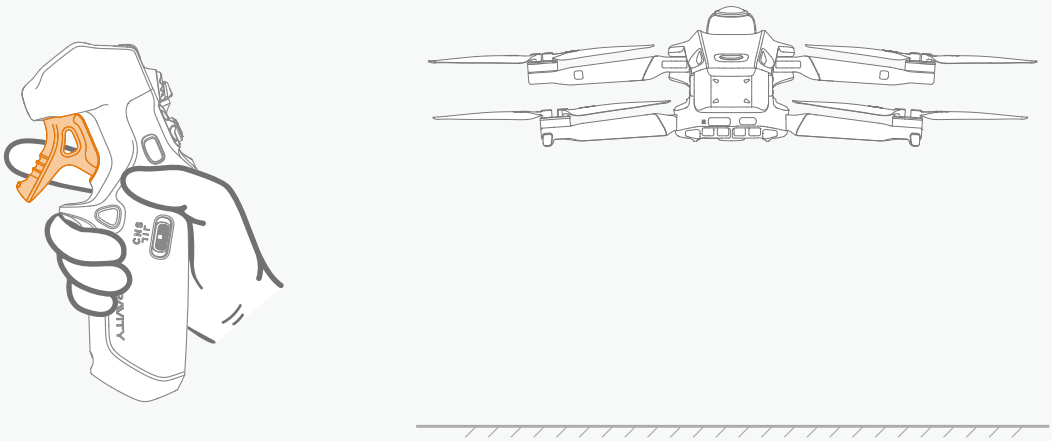

- Push throttle trigger inward will make the drone fly in the direction of the current heading. Greater throttle push allows for faster acceleration.



© 2025 Antigravity All Rights Reserved

The Antigravity A1 drone does not fly backward.

Adjusting Heading of the Drone

Swinging your arm to the left or right controls the drone's heading in the Free Motion mode by default.

· Pressing the throttle trigger and swinging to the right will allow the drone fly forward to the right.

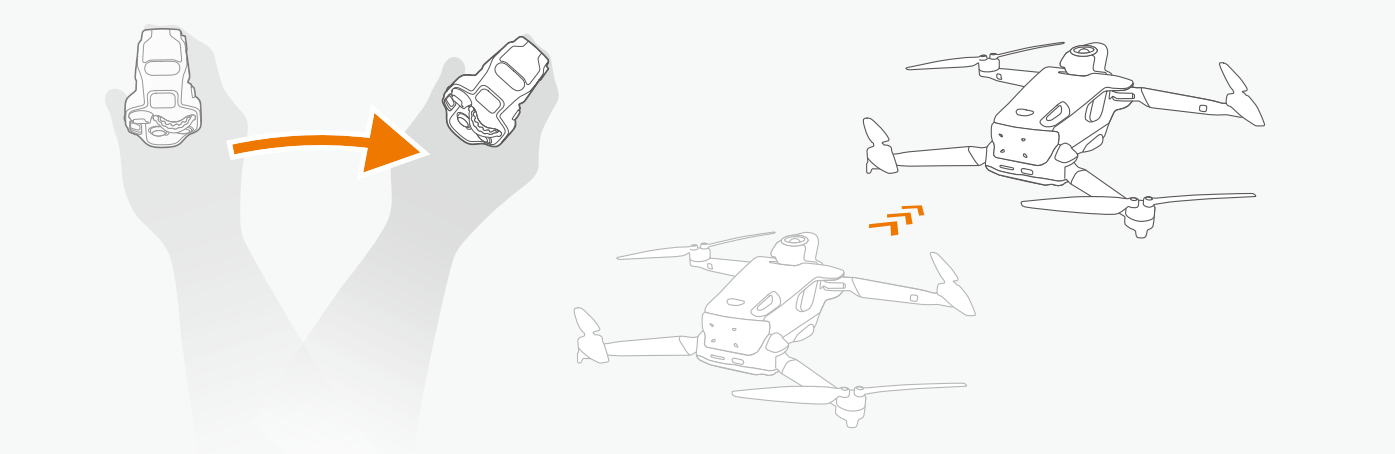

· Pressing the throttle trigger and swinging to the left will allow the drone fly forward to the left.

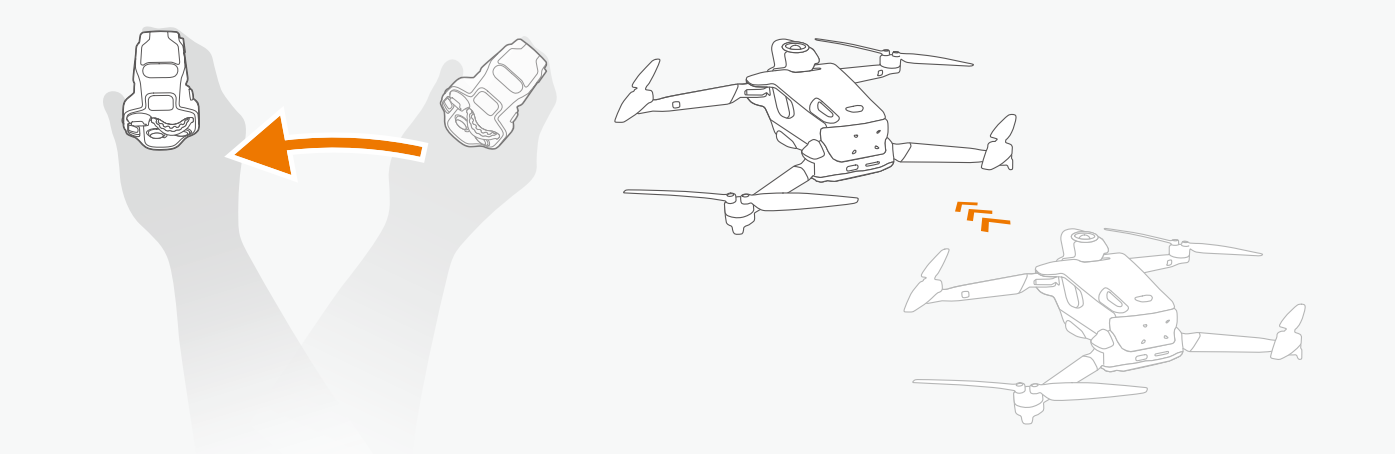

However, in the FPV mode, the heading of the drone is controlled by the rotation of the wrist rather than arm swing movement. For more information about the control modes, please refer to the ***"Controlling in FPV Mode"*** section.

Climbing and Diving

· Using the wrist as the pivot, rotate the Grip Motion Controller clockwise toward the body to make the drone climb upwards.

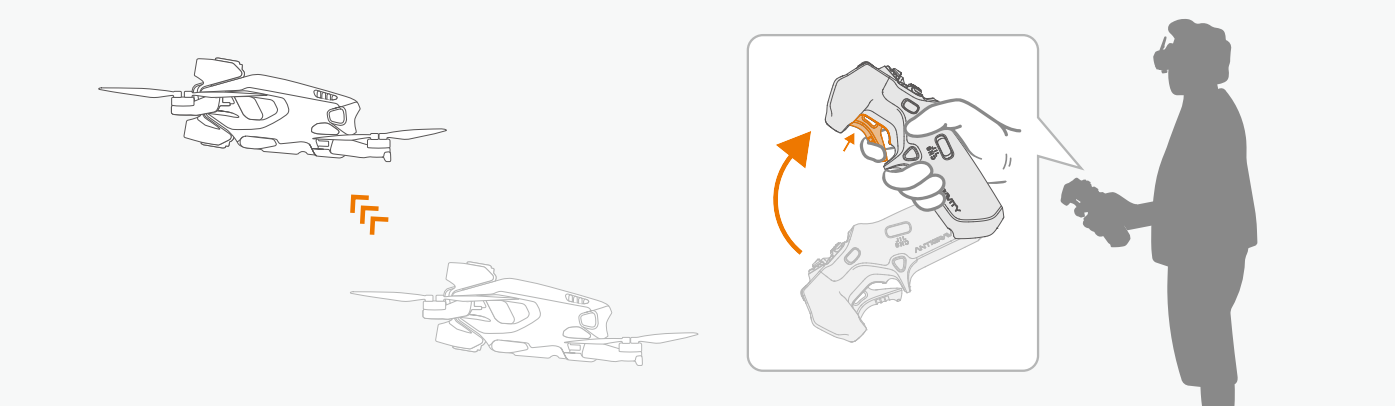

© 2025 Antigravity All Rights Reserved

・Using the wrist as the pivot, rotate the Grip Motion Controller counterclockwise toward the body to make the drone dive downwards.

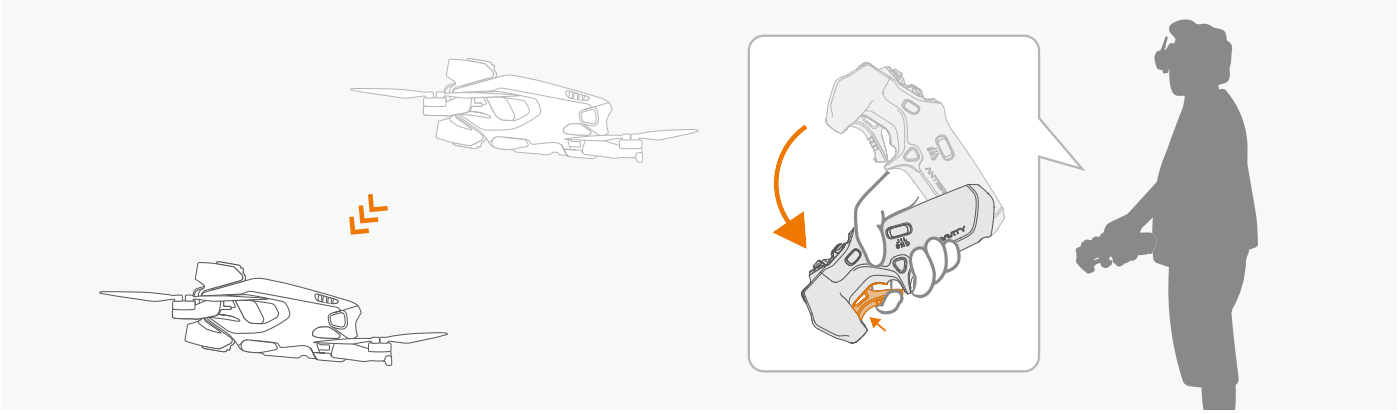

Taking Off and Landing

Take off	・Push the flight slider in two short bursts to unlock the motors. The drone enters idle state with all four motors unlocked and is ready to take off. ・Slowly push the flight slider upwards. The drone will start ascending and hover at 1.5 meters (4.9 feet).
Landing	Push the flight slider downwards to allow the drone to descend gradually.
Break	Press once on the emergency break / RTH button to halt the drone from continues its flight. Press and hold the same button again to resume the flight.

⚠ For safety, stop the drone before adjusting the fitting of your Vision Goggles during flight to prevent accidents.

Stopping the Motors Mid-air

During the flight, if you encountered an emergency situation (such as the drone becoming uncontrollable), users can trigger the mid-air motor stop by following button combinations:

1. First, press and hold the video recording button on the Grip Motion Controller.
2. While holding the video button, use the other hand to rapidly press the emergency brake/return-to-home (RTH) button four times.

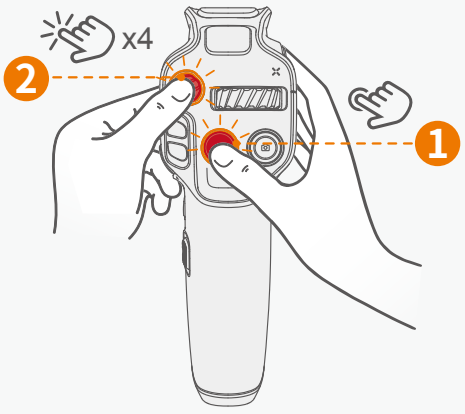

© 2025 Antigravity All Rights Reserved

3. The motors will immediately shut down and the drone will fall from its current altitude. Be extra cautious when exercising this option.

To use the mid-air motor stop function, you must first enable this option in the Safety menu on the Vision Goggles.

Controlling in Free Motion Mode

The Free Motion mode in the Vision Goggles allows for intuitive control of the drone using the Grip Motion Controller. In this mode, the movement of the Grip Motion Controller syncs with the navigation point in the Vision Goggles, directing the drone's heading. You can then observe a 360-degree free view during flight. When the viewpoint is independent from the flight direction, a small picture-in-picture (PIP)window will pop up in the Vision Goggles will display the front view of the drone.

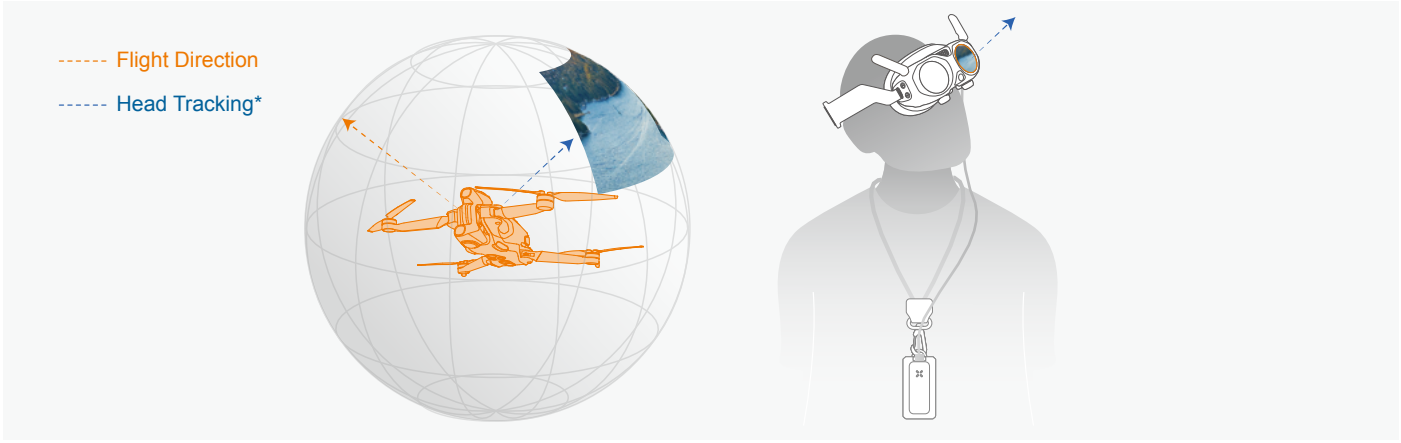

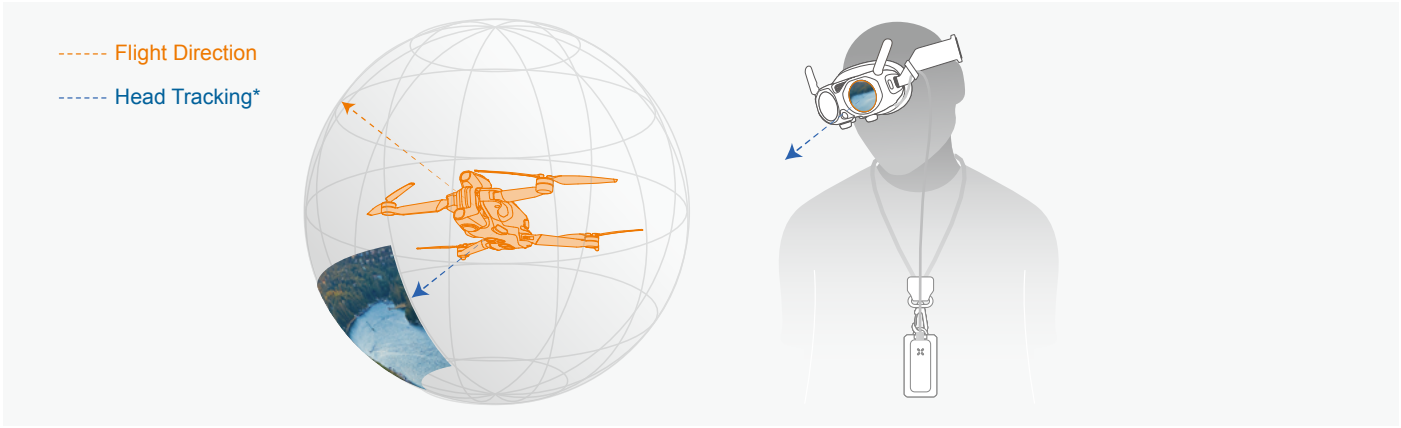

*Head tracking syncs live view with the head movements from user, and it is independent of drone's heading.

© 2025 Antigravity All Rights Reserved

In the Free Motion mode, the drone's heading will move with the navigation point.

· Swing the motion controller to the left with the pressed throttle, the drone's heading will also turn to the left.

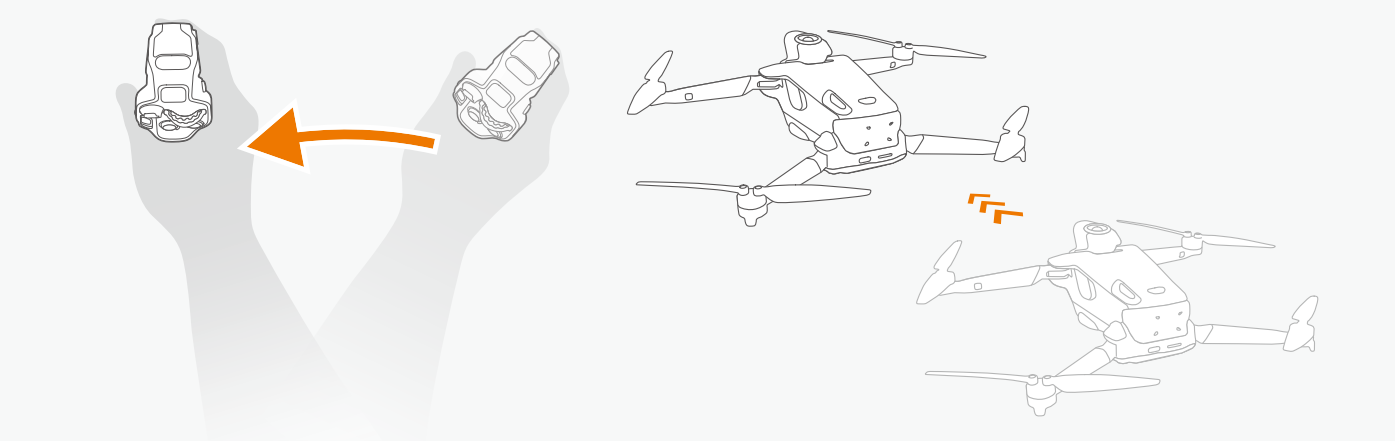

· Tilt your arm upwards while press the throttle trigger, the drone will climb towards the navigation point.

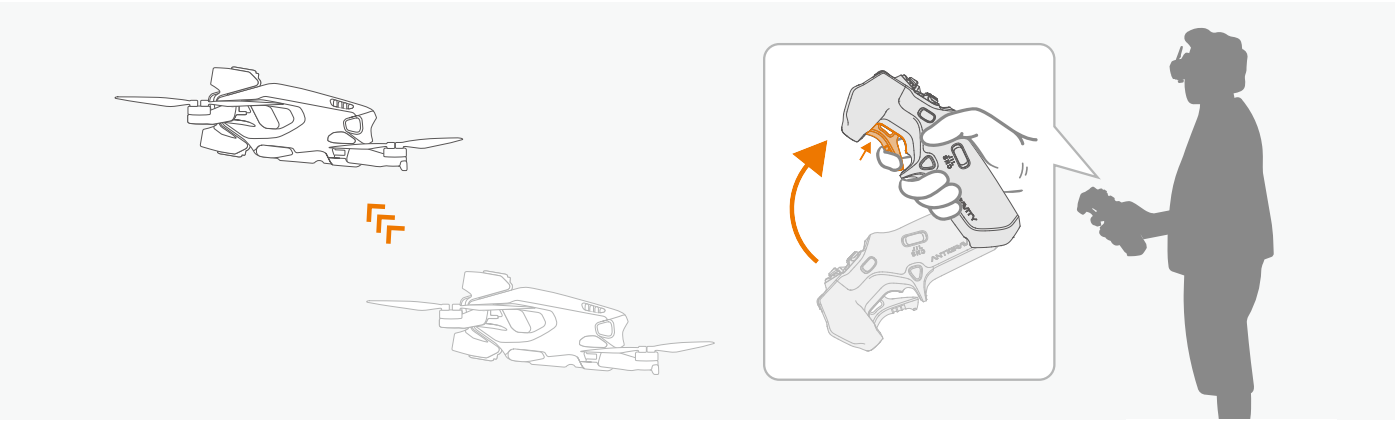

Controlling in FPV Mode

FPV mode offers the flight experience of a racing drone. In FPV mode, the live view is aligned with the heading of the drone but not the head tracking perspectives. Turning your head will not result in a change of the heading of the drone. However, you can still perform a 360 panoramic view mid-flight. The biggest difference to Free Motion and FPV mode is the response to the wrist movements.

· Rotating your wrist counterclockwise will cause the drone to turn left.

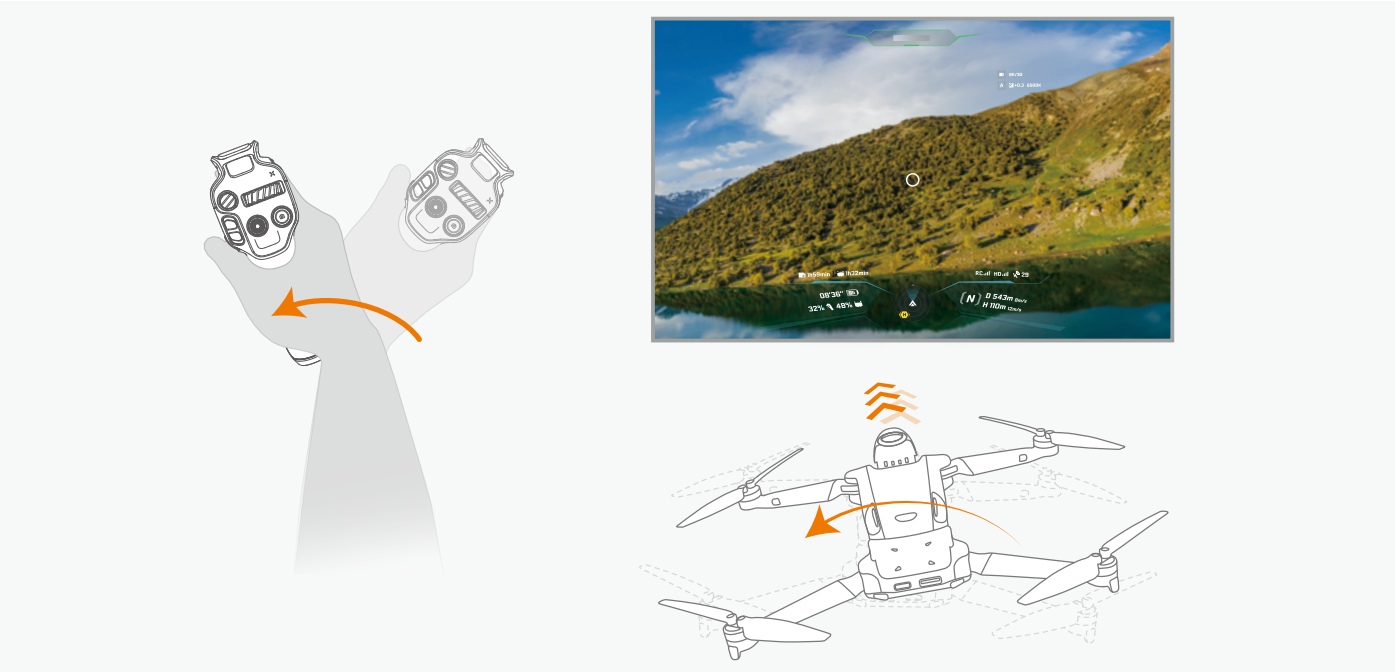

© 2025 Antigravity All Rights Reserved

· Rotating your wist clockwise will cause the drone to turn right.

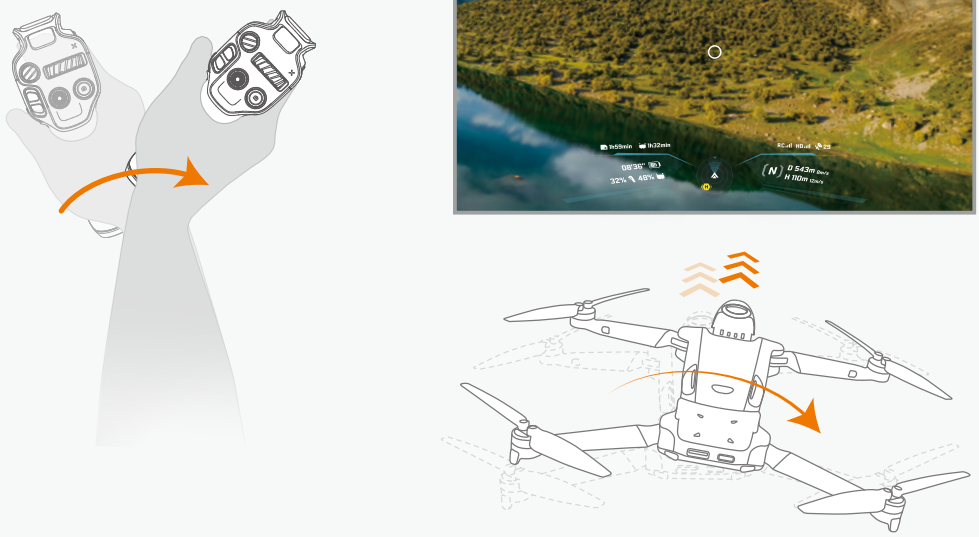

In FPV mode, the tilt of the live view will change in sync with the rotation of wrist. The greater the degree of rotation, the greater the tilt of the live view.

· In FPV mode, swinging your arms horizontally will not affect the heading of the your drone.

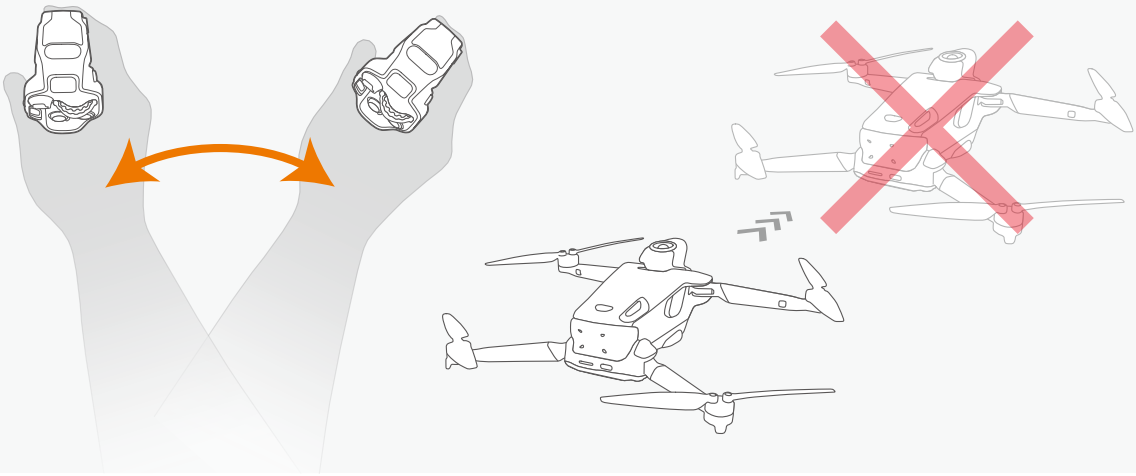

Switching Between Control Mode

To switch between the Free Motion and FPV mode, click on the icon at the top right of the Vision Goggles menu.

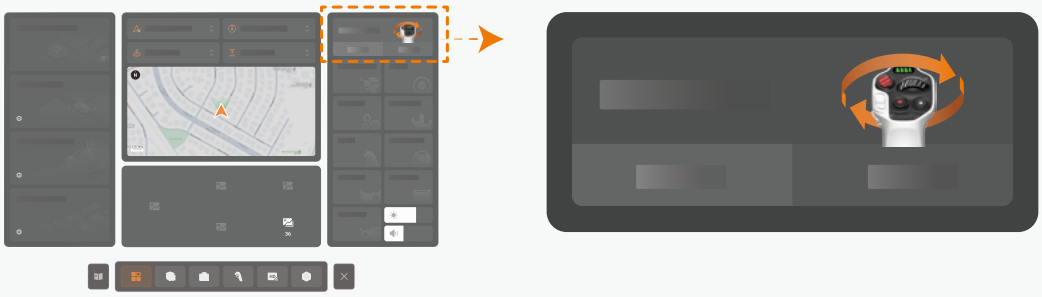

© 2025 Antigravity All Rights Reserved

To switch control modes on the fly, you can press the menu button on the Grip Motion Controller twice.

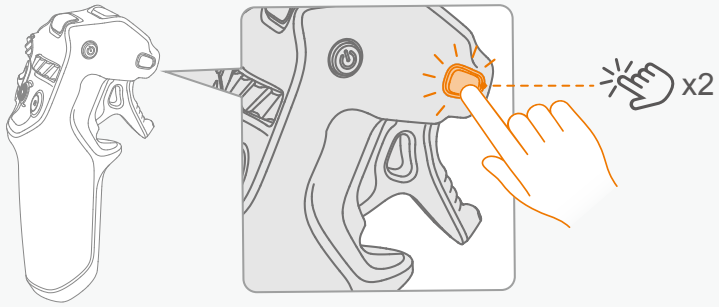

A1 Drone

Flight Mode

The A1 drone offers three flight modes, which can be switched by toggling the button on the Grip Motion Controller. The differences between these three modes are listed as follows:

- **Normal (N) mode:** The drone hovers accurately and maintains stable flight, suitable for most flight scenarios.
- **Sport (S) mode:** The drone flies at its maximum horizontal speed, with enhanced flight performance.
- **Cinematic (C) mode:** The horizontal speed is reduced compared to Normal mode, making it more suitable for the professionals to capture smooth footage.

The location of the mode button is as follows, with the Normal mode set as default upon delivery.

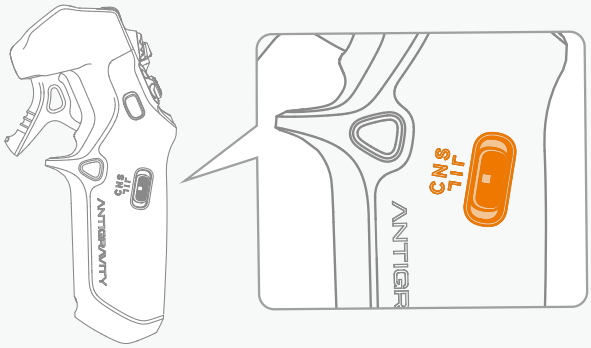

For information on the maximum speed in each of the flight modes, refer to the ***"Product Specification"*** in the appendix.

- Allow a minimum braking distance of 10 m (32.8 ft) for safety when flying in Sport or Normal mode in windless environment.
- In Sport mode, the drone's speed increases significantly compared to Normal mode, requiring a braking distance of at least 20 m (65 ft) in windless conditions for safety.
- The braking distance of your drone is affected by the flight altitude. When operating in high altitude[1] areas, allow for ample braking distance.
- In Sport mode, the drone's control sensitivity increases, so users should allow ample space for executing any maneuvers.
- In Sport mode, the obstacle avoidance system is turned off automatically due to the increased speed. Caution is advised.

[1] *With a high-capacity flight battery, high-altitude areas are defined as above 3000 meters. When equipped with a standard battery, high-altitude areas are defined as above 4000 meters.*

© 2025 Antigravity All Rights Reserved

When the vision system is unavailable or disabled, and the Global Navigation Satellite System (GNSS) signal is weak or the compass is interfered with, the drone will automatically switch to Attitude (ATTI) mode. In Attitude (ATTI) mode, the drone may be more susceptible to the influence of the surrounding environment. In this scenario, even a mild wind may cause the drone to drift, which is dangerous when flying indoors or in narrow spaces. It is recommended to land the drone immediately to avoid accidents when the drone in this mode.

Controlling Mode

Free Motion Mode

In the Free Motion mode, the navigation point is constantly tracking with the your movement or gestures, allowing the drone to sync its direction with the navigation point. This enables a 360-degree view during flight, with a PIP windows displaying the drone's front view. For more information, refer to ***"Controlling in Free Motion Mode"***.

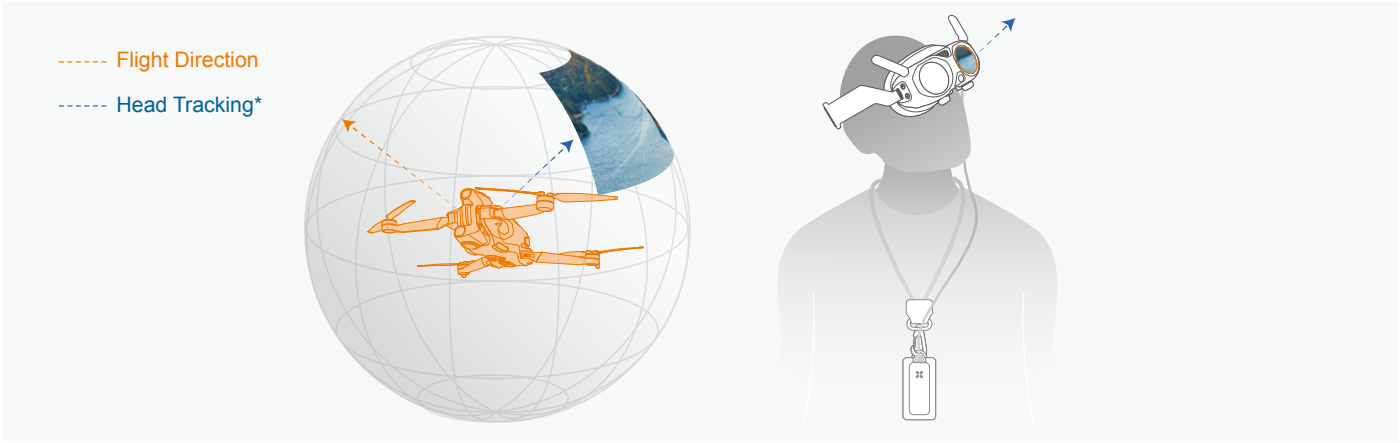

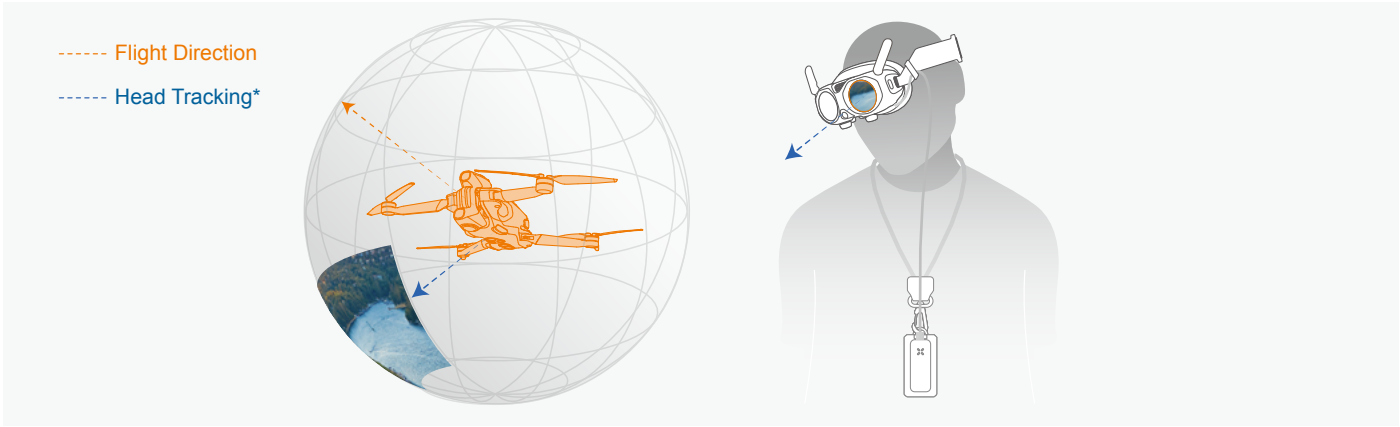

*Head tracking syncs live view with the head movements from user, and it is independent of drone's heading.

FPV Mode

FPV mode offers the flight experience of a racing drone. In FPV mode, the live view is aligned with the heading of the drone but not the head tracking perspectives. Turning your head will not result in a change of the heading of the drone. However, you can still perform a 360 panoramic view mid-flight. For more information, refer to ***"Controlling in FPV Mode"***.

© 2025 Antigravity All Rights Reserved

Flight Indicators

The flight indicators locate the rear of the A1 drone. Refer to the figure below:

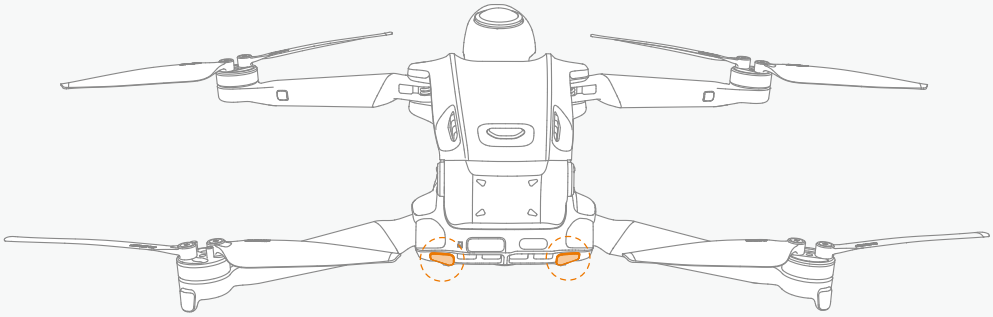

Before Taking Off

After the drone's power is turned on and the motors are not yet started, the blinking flight indicator LED will show the current system status. Refer to the table below for the explanation of each blinking pattern.

General Status		
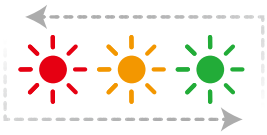	Alternating blinking of red, orange, and green LEDs	Drone self-check.
	Slow blinking of green LEDs	Strong GNSS signal detected. The drone is ready to take off.
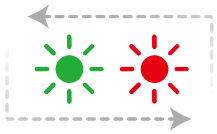	Alternating blinking of red and green LEDs	Motors are unlocked and the propellers start rotating. The drone is ready to take off.
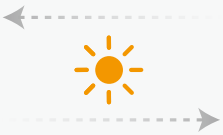	Rapid blinking of yellow	Connection signal lost between the drone and controller.
	Short burst of blinking yellow	Battery level low.
Critical Status		
	Blinking red LEDs	· System error detected. · Drone is in ATTI mode. (no GNSS signal detected and vision system is not available)
	Blink twice in red over a short burst.	Critical low battery level. Land your drone immediately.

© 2025 Antigravity All Rights Reserved

	Solid red LEDs	Critical system error detected. Power on and off your drone.

Flight Indicator at Front	Pattern	Drone Status
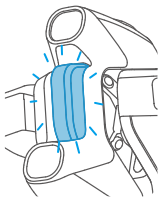	Blinking blue LED	Firmware update in progress.

After Take-off

While the drone has taken off, the flight indicator at the front will start blinking green.

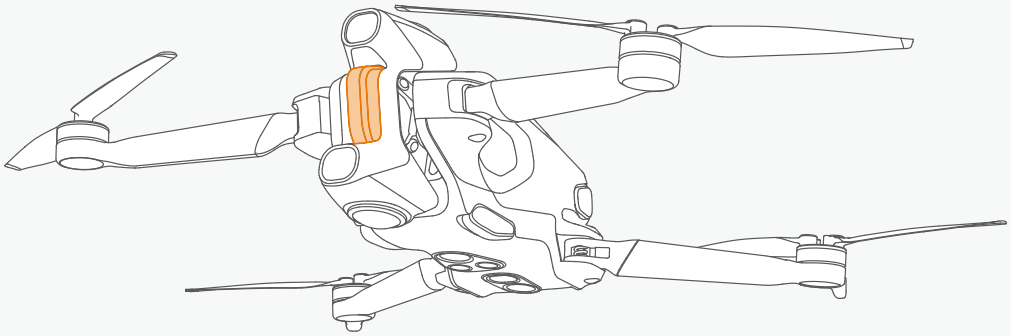

Flight Indicators at Rear	Pattern	Drone Status
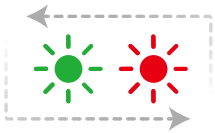	Alternating blinking of red and green LEDs	Normal. Drone is in flight.

Flight Indicator at Front	Pattern	Drone Status
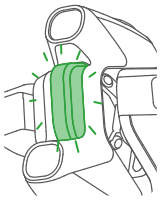	Slow blinking of green LED	Normal. Drone is in flight.

⚠ The blinking pattern of the flight indicator may vary by country or region. Please comply with local laws and regulations

© 2025 Antigravity All Rights Reserved

Return to Home (RTH)

Introduction to RTH

The RTH function allows the drone to return to the last recorded home point on its own. There are three ways to initiate RTH: manual activation, low battery, or loss of control signal. If the drone has successfully recorded the home point and the GNSS is working properly, the drone will automatically return and land at the home point.

Home Point

Home point is defined as the location where a strong to medium GNSS signal strength (represented by a white icon) is received. So long as the signal strength remains stable before takeoff, the Home point can be refreshed. However, If the signal is weak, the Home point will not be updated.

GNSS Signal		Denotes strong GNSS signal, the Home point is recorded and can be updated.
		Denotes weak GNSS signal, the Home point cannot be recorded or updated.
Home Point		It can be either automatically or manually updated when the GNSS signal is normal.

Caution: If the drone is adjacent to within a flight protection area, Home cannot refresh or recorded.

RTH Process Breakdown

1. Home point is successfully recorded.
2. Start RTH. Activating the RTH can be set in the RTH settings. Default behavior is 'RTH', but can also be set to "Hover".

The RTH can be triggered by the following use cases:

- Manually initiating RTH
- Automatically when the control signal is lost between the drone and controller.
- Automatically triggered when the battery level is critically low.

© 2025 Antigravity All Rights Reserved

3. Drone adjusts its heading and start fly towards the Home point. During RTH, users can abort the RTH flight by short-pressing the RTH button on the Grip Motion Controller.

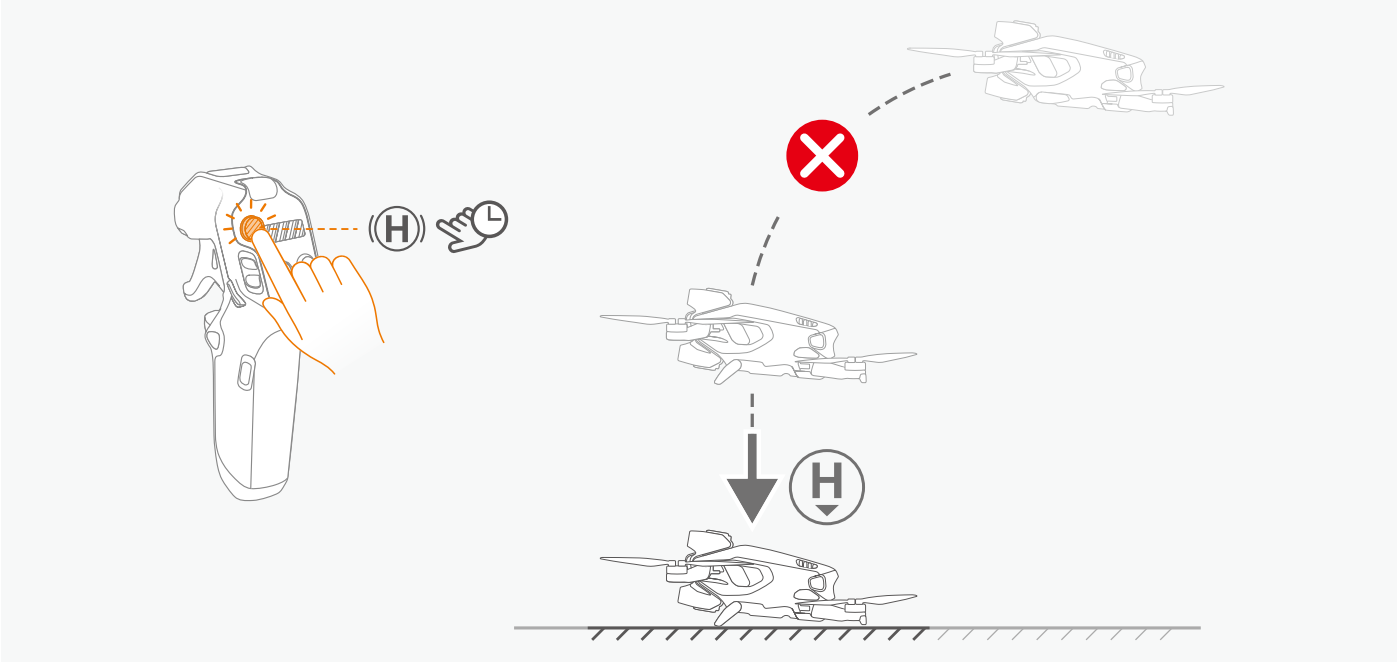

4. When the drone is in the horizontal RTH phase, users can pull the throttle trigger to accelerate the drone and guide the drone quickly to the safe landing area.
5. The flight altitude is crucial for correctly guiding the drone back, so the drone will adjust its flight altitude based on its distance from the Home point:
   - When the drone is less than 5 m (16 ft) from the Home point, the drone will land from its current altitude.
   - If the drone is within 5 to 50 m (16 ft to 164 ft) from the Home point, it will return at the current flight altitude. If the RTH altitude is less than 3 m (9 ft), the drone will first climb to 3 m (9 ft) before flying to the Home point.
   - If the drone is more than 50 m (164 ft) from the Home point and its current altitude is lower than the preset RTH altitude, it will first climb to the preset RTH altitude before flying back. If the current altitude is already higher than the preset RTH altitude, it will fly back at the current altitude.
6. During the RTH process, users can view the drone's flight path on the mini-map in the Vision Goggles.



7. Upon reaching the Home point, the drone will land automatically and the motors will stop.

© 2025 Antigravity All Rights Reserved

Manually Initiating RTH

During the flight, users can initiate the return to home function by long-pressing the emergency brake/return button.

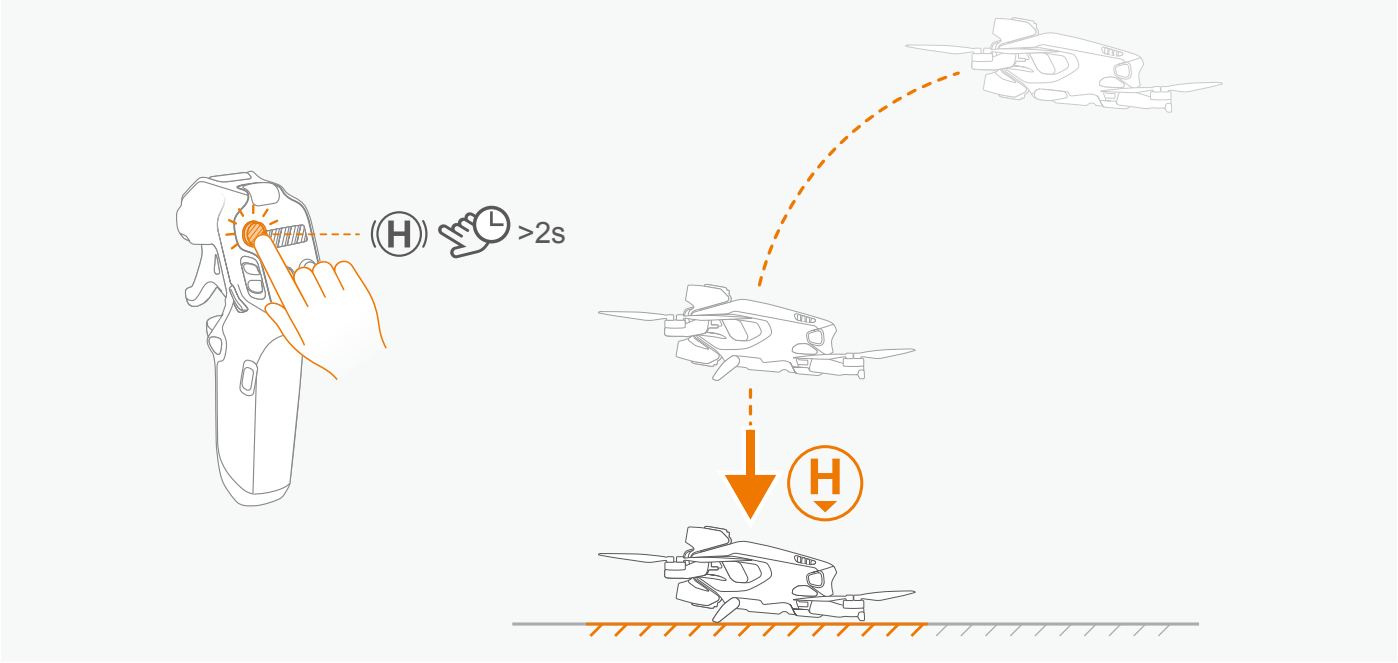

RTH Triggered by Low Battery Level

1. To prevent the drone from being unable to return to a safe location due to low battery power, if the drone detects that the current battery level is insufficient to fly back to the Home point, the drone will automatically trigger the RTH on its own.
2. During the drone flight, the drone will analyze in real time whether the current battery level supports a safe return. If it detects that the remaining flight distance is not sufficient to return to the home point, it will issue a low battery countdown reminder and initiate a 10-second countdown. If there is no user action within the 10-second countdown, the drone will return automatically.
3. During the flight, the aircraft will dynamically estimate the remaining flight distance based on the current location, battery level, and environmental information. User prompts will be given when the battery reaches the corresponding warning level:
   - Level one low battery return: The aircraft will return from the current location and land with a battery level of 15%.
   - Level two low battery return: The aircraft will return from the current location and land with a battery level of 10%.
   - Level one low battery landing: The aircraft will land from the current altitude with a battery level of 5%.

- In strong wind conditions, the estimation of remaining flight distance may be affected.
- If the current status of the aircraft does not support the estimation of remaining flight distance (e.g., no home point, battery communication abnormality, no GNSS signal), the estimation of remaining flight distance will be invalid, and users need to pay attention to flight distance and battery level.

RTH Triggered by Loss of Signal

When the video transmission signal of the Vision Goggles or the Grip Motion Controller is lost, if the Home point has been successfully set, then the RTH process be activated automatically if the signal loss timeout occurs.

© 2025 Antigravity All Rights Reserved

Obstacle Avoidance and Landing

Obstacle Avoidance Overview

The drone is equipped with a dual-camera visual system for forward and downward sensing, providing multi-directional obstacle avoidance support for its flight.

- **Direction:** The drone has obstacle avoidance capability in the forward and downward directions. The forward obstacle avoidance system detects obstacles in front of the drone to ensure safety during forward flight; the downward obstacle avoidance system is used to detect obstacles beneath the drone, assisting in avoiding ground or other objects during take-off, landing, and low-altitude flight.
- **Forward :** The effective distance of forward obstacle avoidance varies in different scenarios and conditions. Generally, the forward ranging distance is between 0.5 meters and 18 meters.
- **Downward:** The downward ranging distance is between 0.3 meters and 7.5 meters, effectively detecting obstacles below the drone to ensure the safety of low-altitude flight.

Obstacle Avoidance

The obstacle avoidance feature relies on multiple systems such as the vision system and infrared sensing system on the drone. Users must understand safety precautions when using this function. Observe the following practice when using the obstacle avoidance feature.

- Be aware of the surroundings of the flight site at all times. Since the performance of the obstacle avoidance system is affected by ambient lights and other factors and cannot replace manual control and judgment, stay alert to the drone's movements during the flight.
- When the GNSS signal is weak, the drone is flying at 0.5 to 10 meters (1.6 to 32.8 feet). The downward vision system works best in this range. If the drone flies higher than 10 meters (32.8 feet), visual positioning may be degraded. Fly with caution.
- In dimly lit environments, even with the landing light turned on, the visual system may still not achieve optimal performance, so fly with caution.
- When flying near the water surface, the downward vision sensor system may not work properly. This could make it challenging to avoid the water surface during landing. It is important to maintain control of the drone, assess the surroundings, and not rely too much on the vision system for stabilization.
- The vision sensors cannot identify large structures with frames and wires, such as tower cranes, high-voltage transmission towers, high-voltage power lines, cable-stayed bridges, and suspension bridges. Do not operate near these structures.
- The visual system may not work effectively near surfaces with no distinct patterns, or in areas with low or high lighting. Exercise caution when operating your drone in the following scenarios:
  a. Flying over the monochrome surfaces.
  b. Flying over the highly reflective surfaces.
  c. Hovering or fly over the water or transparent surfaces.
  d. Landing on the moving surfaces or objects.
  e. Flying over areas with drastic changes in light.
  f. Flying over extremely dark (< 15 lux) or bright (> 40,000 lux) surfaces.
  g. Fly over reflective surfaces or surfaces that absorb infrared waves, such as mirrors.
  h. Fly over surfaces with no distinct pattern or texture.
  i. Fly over surfaces with repetitive identical patterns or textures, such as tiled designs.
  j. Fly into obstacles with small reflective surfaces, such as branches or power lines.
- Keep the camera and sensors clean. Keep the lenses away from scratches. Do not attempt to modify the lenses. Do not use the drone in dusty or humid environments.
- Do not fly on rainy or foggy days, or when visibility falls below 100 meters (328 feet).

© 2025 Antigravity All Rights Reserved

- Before each takeoff, ensure to check the following items:
  a. Make sure there are no stickers or stains on the sensors of the infrared and vision systems.
  b. Clean the sensors of the vision and infrared system. Remove any residue such as dirt, dust, or water. Use a dry cloth for cleaning and avoid alcohol-based lotions as a cleaning agent.
- Remain vigilant and fly with caution when operating your drone at night, as the vision system performance is degraded in low light conditions.

Enabling Obstacle Avoidance

The obstacle avoidance function is enabled by default and it can be manually disable in the Safety settings at the bottom of the menu in the Vision Goggles.

The obstacle avoidance function's performance is affected by flight speed. Obstacle avoidance works only in C mode or N mode bu not in S mode, so exercise caution when flying in S mode.

When obstacle avoidance is turned off, the following icon will appear in the bottom right corner of the Vision Goggles interface:  . Be caution when this icon is in red.

Obstacle Avoidance Action

The default obstacle avoidance action for the drone is to brake and hover when obstacles are detected.

Propeller Guards

Installing a propeller guard protects your drone from damages and significantly reduces the risk of accidents. Please follow the instructions below to install the propeller guard.

- The installation of propeller guards increases the drone's Maximum Takeoff Mass (MTOM). This change will affect flight performance, battery life, and image stitching parameters. Users should exercise caution when operating the drone.
- After installation, recalibrate stitching settings in the Antigravity app and official video editing tool to ensure optimal visual effects. Visit the official website for details.

Installing the Propeller Guards

1. Unlock the latches on the propeller guards.

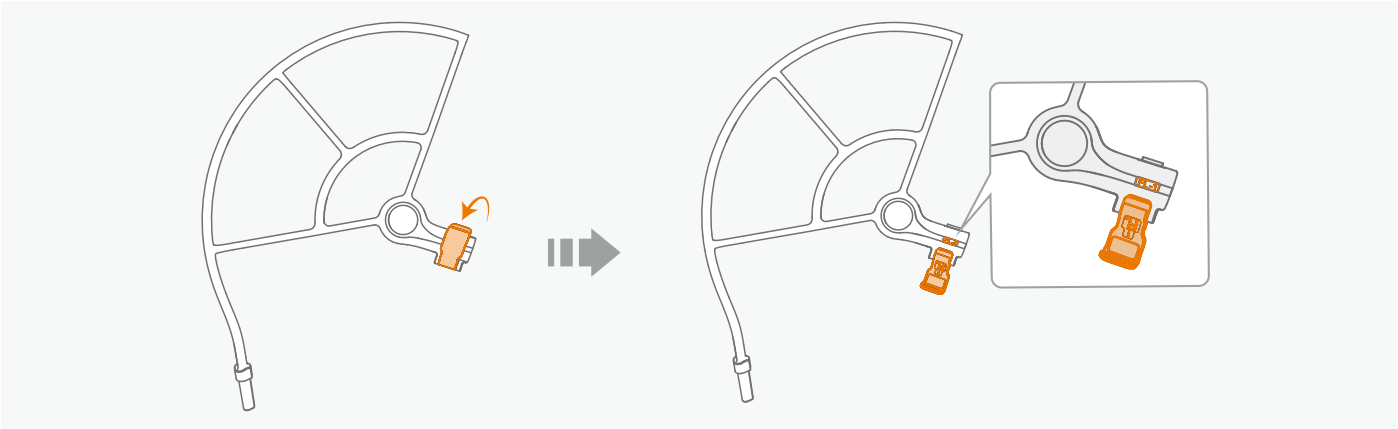

© 2025 Antigravity All Rights Reserved

2. The propeller guards are distinguished by front (F), back (B), left (L), and right (R). Be sure to assemble the components with the corresponding numbers together. The paring of the components are displayed below:

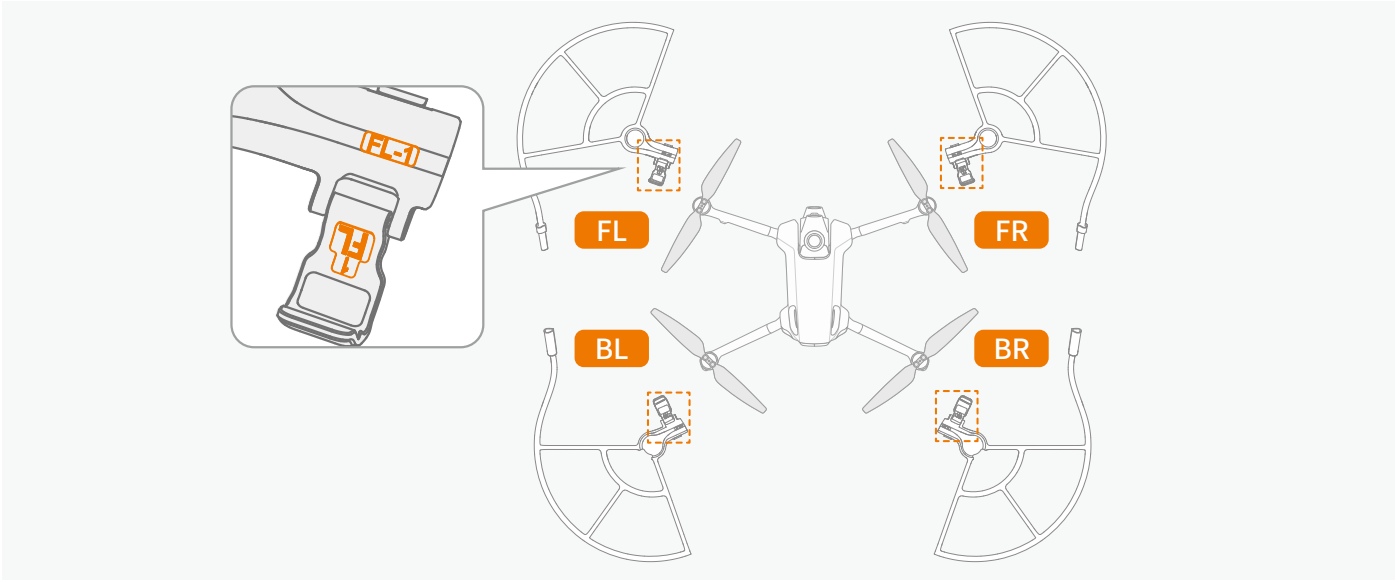

3. Connect the front and back propeller guards using the markers located around the latches.

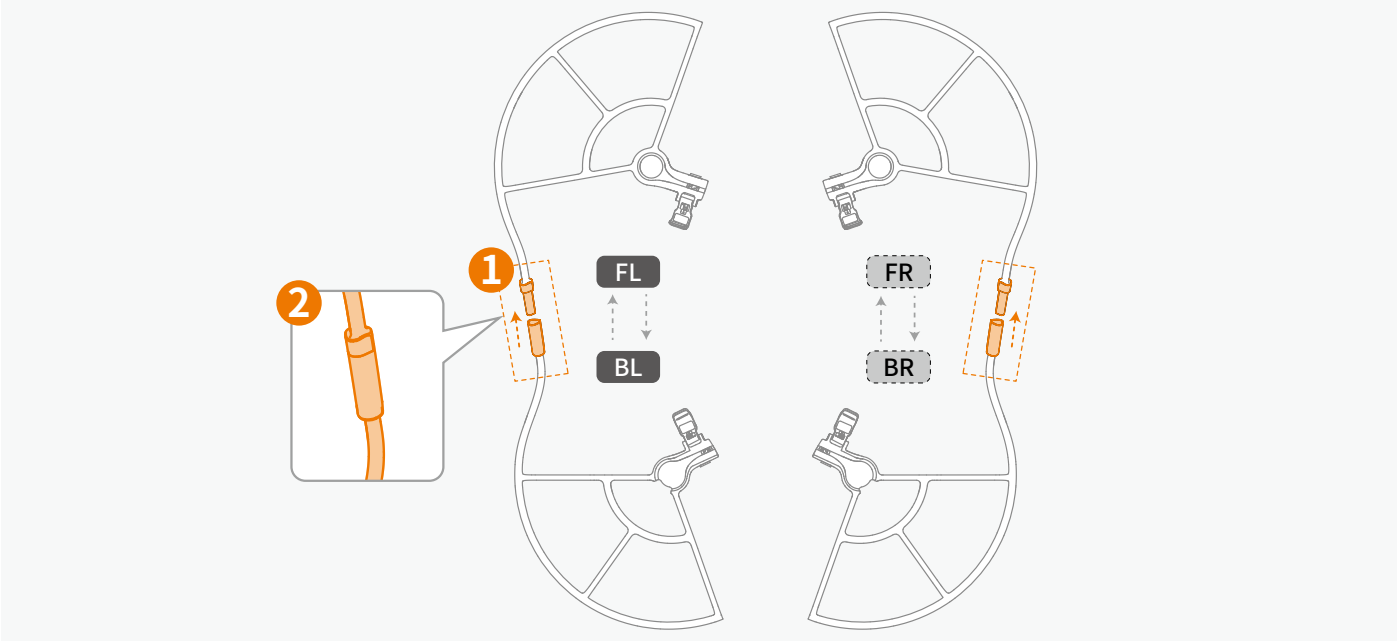

4. Attach the connected propeller guards onto the drone and lock the latches.

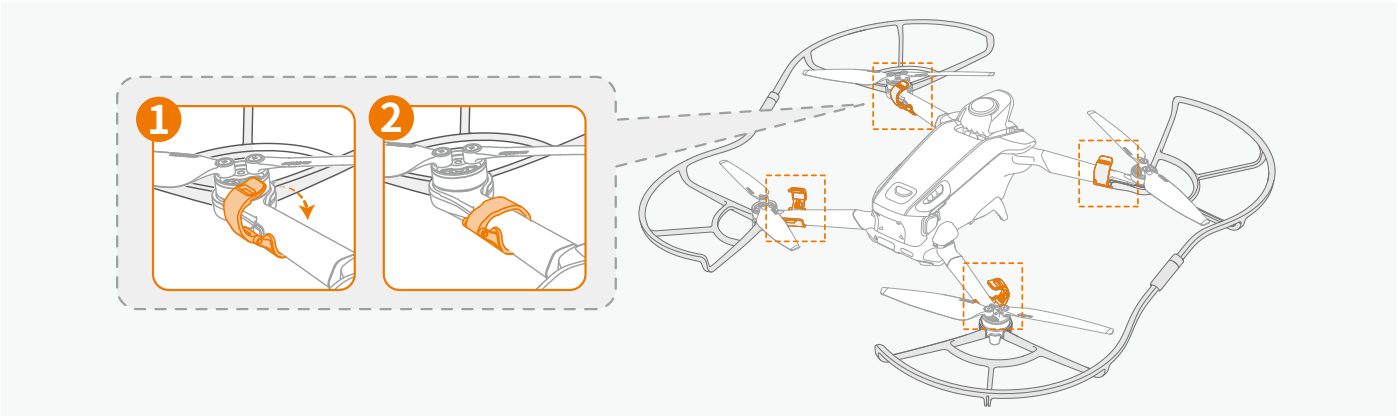

© 2025 Antigravity All Rights Reserved

Propellers

Propellers are damage-prone and must be inspected for any damage after each flight. Users should regularly check and replace them as necessary. The following section will describe how to replace propellers on drones.

How to Replace Propellers

> ⚠ Discard the propellers set and the screws from the corresponding motor, do not reuse. When replacing the new propellers set, use the propellers from the identical package. DO NOT mix with the propellers from other packages.

1. Remove the screws (M 1.2 × 2) from the motor by using the supplied screwdriver from the bundle.

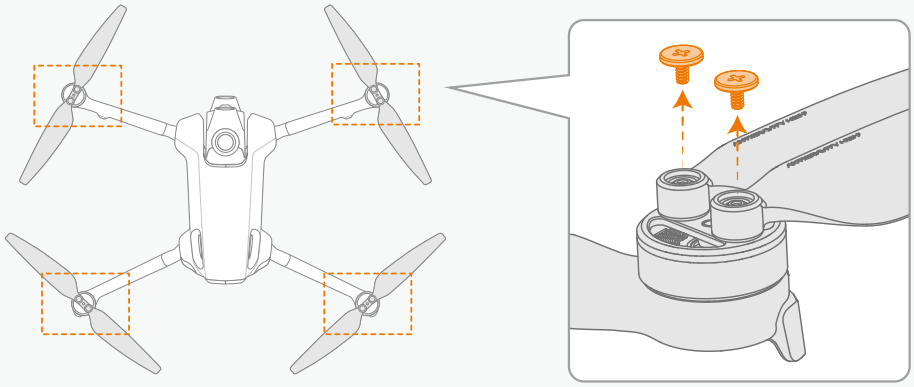

2. Discard the legacy screws and propellers. Do not reuse.
3. Identify the markers on the propellers that match the appropriate motors. Refer to the figure below.

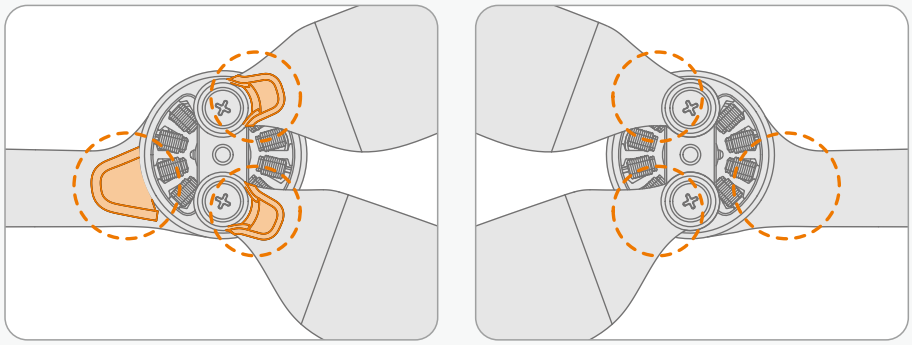

4. Mount the marked propellers onto the motors with the marker, and the unmarked propellers onto the unmarked motors. Apply the specified torque when tightening the screws.

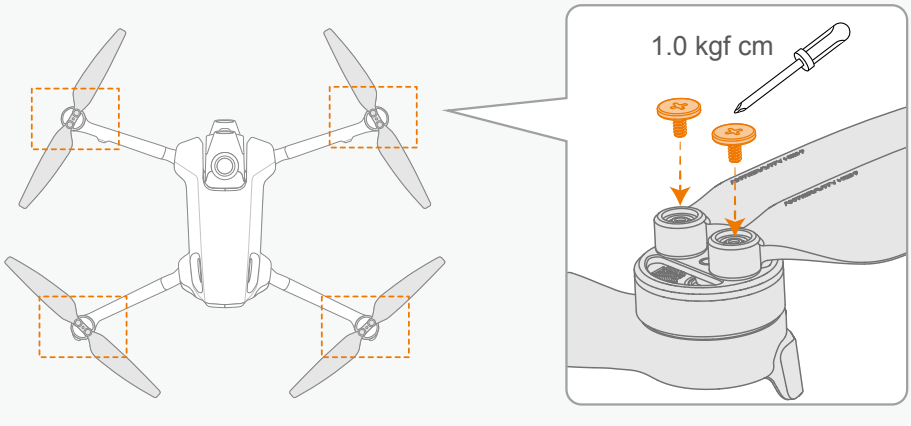

© 2025 Antigravity All Rights Reserved

Flight Battery

Safety Notice for Flight Battery

- Do not expose batteries to moisture, as this may lead to combustion or explosion. If the battery comes into contact with liquid, immediately remove it from the aircraft, place it in a safe, open area, and contact technical support for assistance.
- Use of unsupported batteries is strictly prohibited. Always use the included charger for the best results.
- Do not use batteries that are swollen, leaking, or have damaged packaging.
- Avoid using batteries in high-temperature environments, as this may lead to battery ignition or explosion. In low-temperature environments, performance may be affected, and caution is advised.
- Do not pierce the battery packaging.
- The battery electrolyte is highly corrosive. In case of leakage, avoid direct contact. If skin comes into contact with leaked fluid, immediately rinse with plenty of water and seek medical attention.
- Ensure batteries are stored out of reach of children. If a child accidentally swallows any part, seek medical attention immediately.
- Do not reuse batteries that have fallen from a height, been exposed to water, or sustained visible damage.
- In the event of a battery fire, extinguish it in the following order:
- If the battery is charging, disconnect it from the charger.
  a. Cover the battery with sand or a fire blanket.
  b. Move flammable items away from a battery that is on fire.
  c. Extinguish the flames with a fire extinguisher, then call emergency responders.
  d. Use fire-resistant tongs to place the battery into a non-flammable container filled with water to prevent re-ignition.
  e. After the aircraft lands, allow the battery to cool down before charging to prevent issues.
- Do not place batteries near heat sources, such as inside vehicles on hot days, in direct sunlight, or near open flames.
- Charge the battery to at least 60% before long-term storage. Charge it to 60% every three months during storage to prevent over-discharge.
- Do not place batteries in fire or hot stoves, and do not subject them to mechanical squeezing or cutting.
- Do not expose batteries to extreme high temperatures as it may cause them to explode or leak flammable liquids and gases.
- Do not expose the battery to extreme low air pressure environments as it may cause the battery to explode or leak flammable liquids and gases.

© 2025 Antigravity All Rights Reserved

Activation of the Flight Battery

The battery is in sleep mode upon the delivery. You must activate it before the first use. Follow one of the two approaches to activate the battery.

Using the Charger to Activate

Insert the battery into the battery compartment of the drone, then connect the drone to the power source. The LED indicators of the battery will flash green upon successful activation

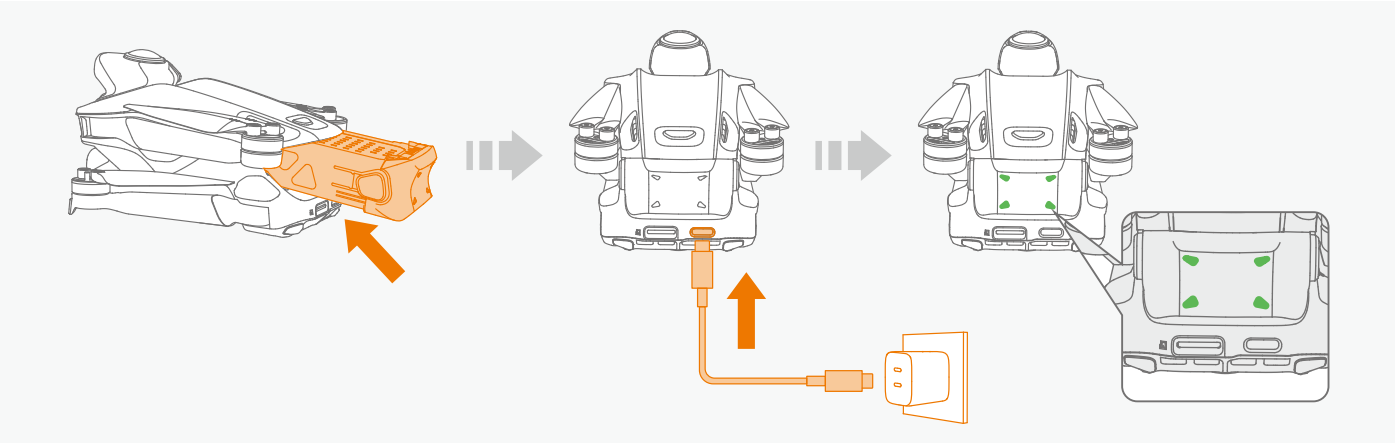

Using the Antigravity A1 Charging Hub to Activate

Connect the charging hub to the power source, insert the battery into one of the slots. The LED indicators of the battery will flash green upon successful activation.

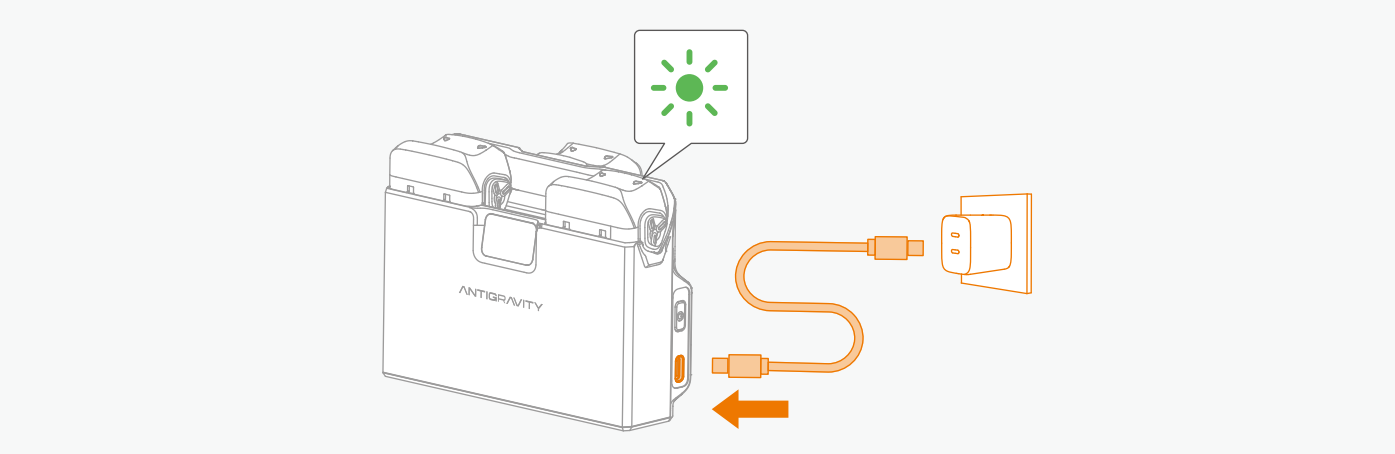

Using the Flight Battery

Installing and Removing the Battery

Insert the flight battery into the battery compartment of the drone. Make sure the battery is fully inserted and hear a click, indicating that the battery latch is securely fastened.

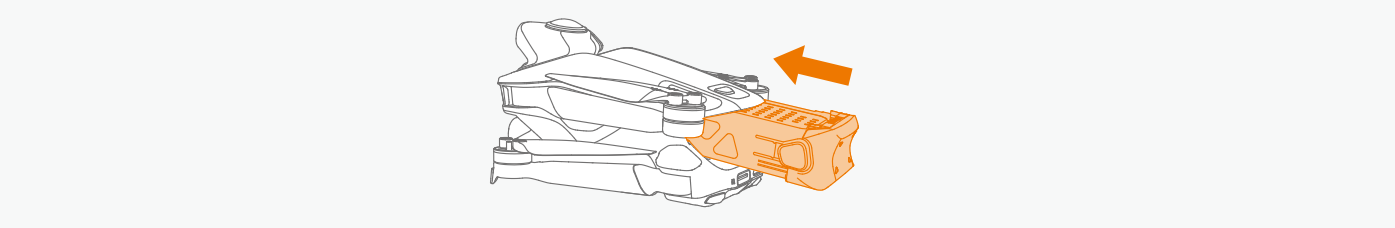

© 2025 Antigravity All Rights Reserved

Press the battery latch on both sides of the battery, and remove the battery from the battery compartment.

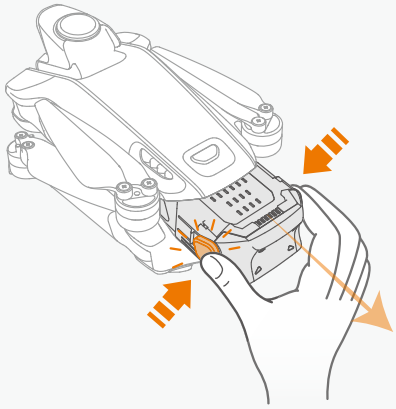

- Do not insert or remove the battery while the drone is powered on.
- Ensure you hear a click when inserting the battery. Do not remove the flight battery if not securely installed to avoid poor contact with the drone and potential danger.

Powering On and Off

Press the power button on the drone once, then hold for two seconds to turn the drone on or off. When the drone is on, the battery level LED on the flight battery touch area will indicate the battery level. When the drone is off, the battery LED lights will turn off.

Flight Battery Firmware

Insert the battery into the drone, power on all three devices and launch the Antigravity App. Follow the in-app instructions to update the firmware if new firmware is available.

The table shows the LED blinking pattern during the firmware update.

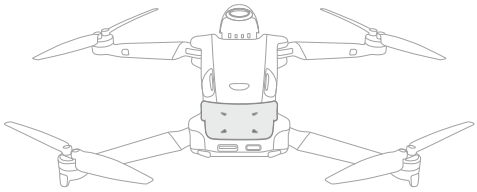

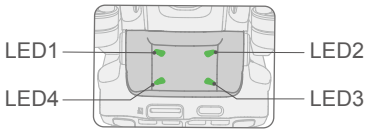

LED Blinking Pattern	LED1	LED2	LED3	LED4	Firmware Update Status
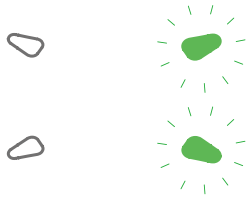	◎	◉	◉	◎	Downloading new firmware.
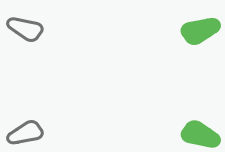	◎	●	●	◎	Firmware update failed.

If the firmware update fails, insert the flight battery into the drone again and power it on. Retry the firmware update from the Antigravity App.

© 2025 Antigravity All Rights Reserved

Charging the Flight Battery

Use the supplied charger or the Antigravity A1 Charging Hub to charge the battery. Follow these steps below to complete charging.

Using Charger

1. Ensure the battery is firmly inserted into the drone.
2. Connect the charger with appropriate adapter plug.
3. Attach the charger to the charging port of the drone.

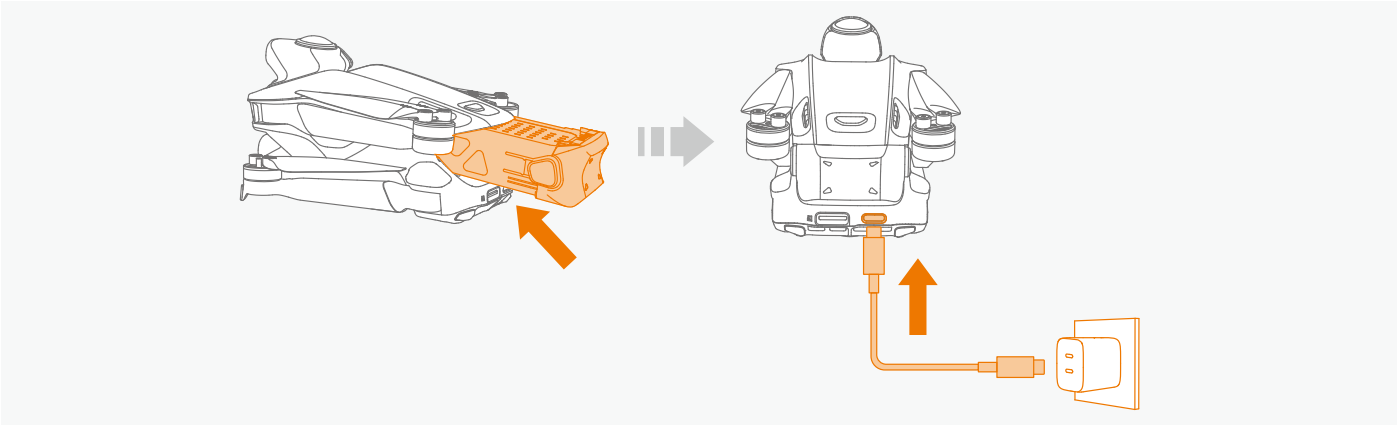

4. The LED indicator blinks in sequence when charging. Press once on the power button of the drone to check the current battery level.
5. The LED indicator turns off after charging completes.

Using Antigravity A1 Charging Hub

For instructions on how to charge with the A1 Charing Hub. Refer to ***"Battery Charging Hub"***.

Battery Level Indicator

Tap once on the touch panel to check the battery level.

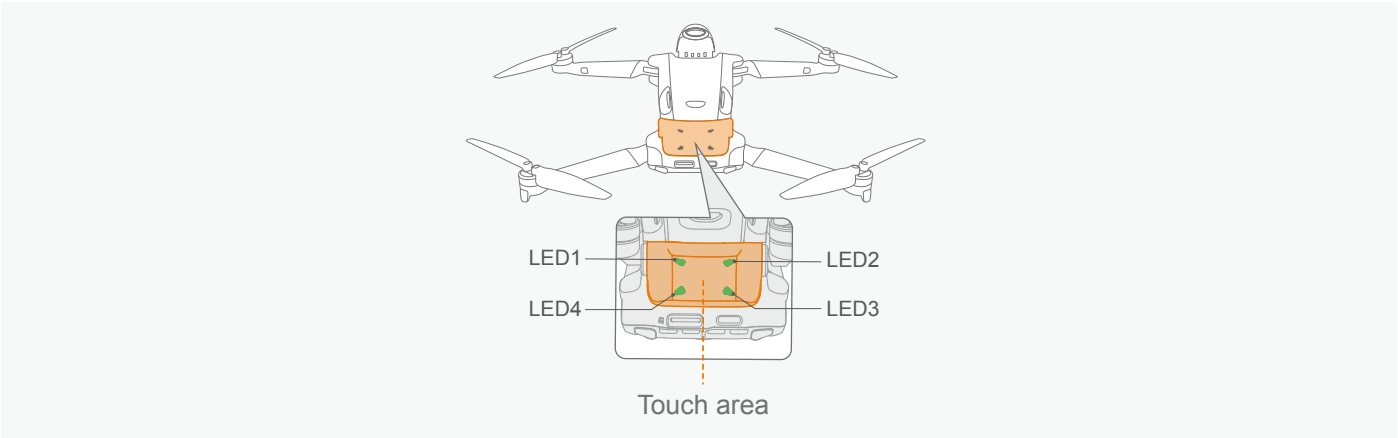

The blinking pattern of the battery LED indicators and corresponding battery levels are listed below:

LED1	LED2	LED3	LED4	Battery Level
●	●	●	●	88% - 100%
●	●	●	◉	76% - 87%
●	●	●	◎	63% - 75%
●	●	◉	◎	51% - 62%

© 2025 Antigravity All Rights Reserved

●	●	◎	◎	38% - 50%
●	◉	◎	◎	26% - 37%
●	◎	◎	◎	13% - 25%
◉	◎	◎	◎	0% - 12%

LED Legends Definitions:

● LED indicators flash solid green ◉ LED indicators flash green ◎ LED indicators is off

Battery Charging Hub

Battery Charging Hub Overview

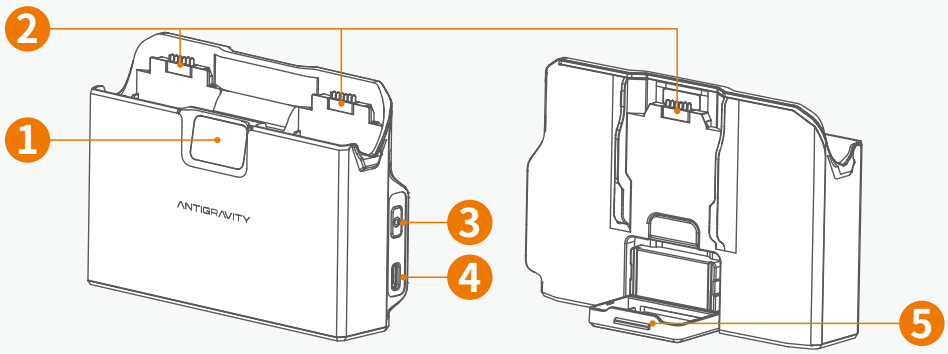

Item	Description	Function
1	Status Display	Display of battery level and system status of the Battery Charging Hub.
2	Battery Slot	Compatible with Standard and High-Capacity Flight Batteries.
3	Function Button	Press once to check battery level; Press and hold to activate Smart Power Pooling mode.
4	USB Type-C Port	It is recommended to use the Antigravity 65W GaN fast charger, or another fast charger that supports USB PD or PPS protocols, to ensure optimal performance.
5	Battery Bracket	Flipped up when not in use.

© 2025 Antigravity All Rights Reserved

Regular Charging

1. Press the button to fold down the battery bracket. This allows for charging three batteries at the same time.

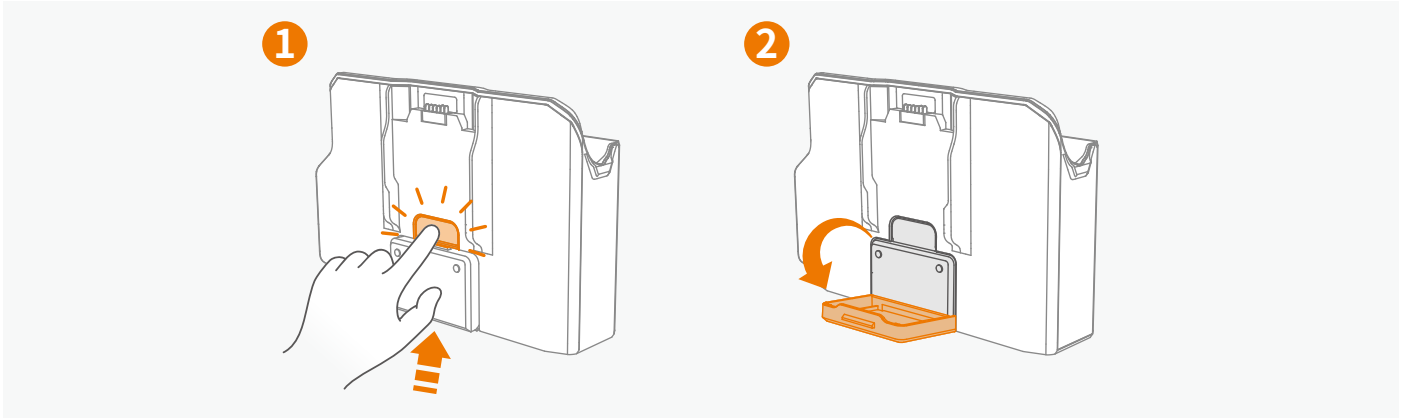

2. Insert the flight battery into the designated slots of the Battery Charging Hub until it clicks into place.

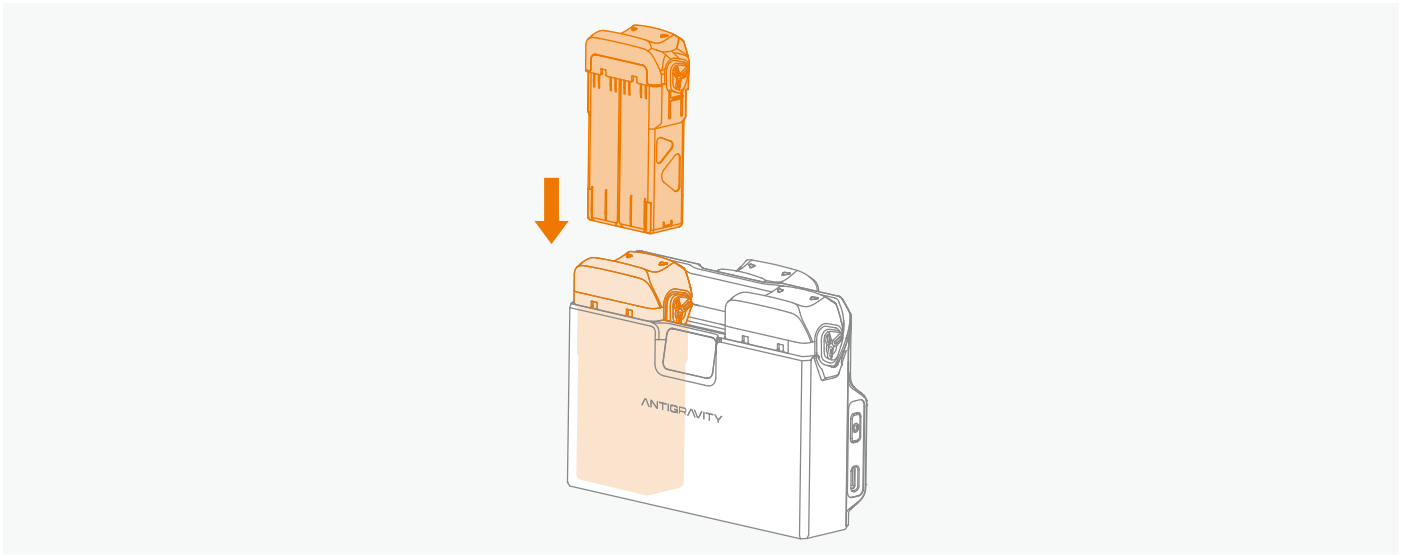

Be aware of pinching when inserting the battery.

3. Connect the Charging Hub to an AC power source using the supplied USB Type-C cable. The hub charges the batteries in sequence based on their remaining power, and the status display panel indicates their charge levels during charging.

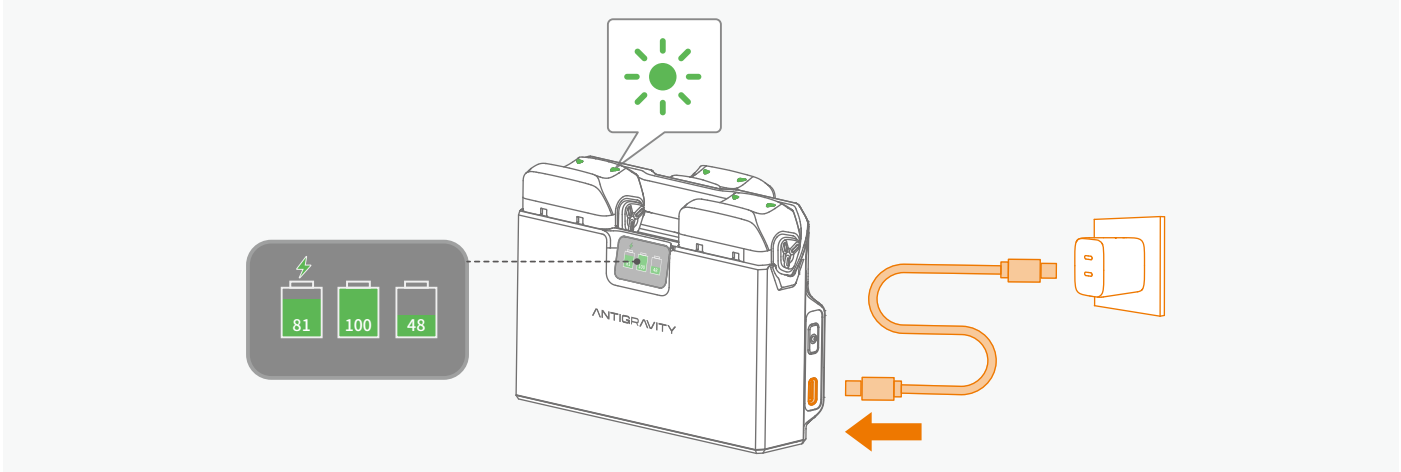

© 2025 Antigravity All Rights Reserved

4. When charging is complete, the status LED on the drone battery stops blinking and turns off. Pinch and hold the clips on the top of the battery to remove it.

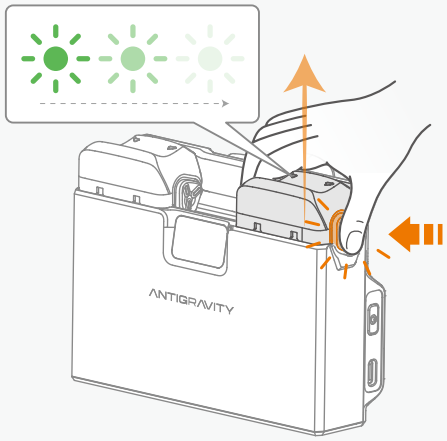

Smart Power Pooling

1. Insert two or more flight batteries into each slot of the Battery Charging Hub until it clicks into place.

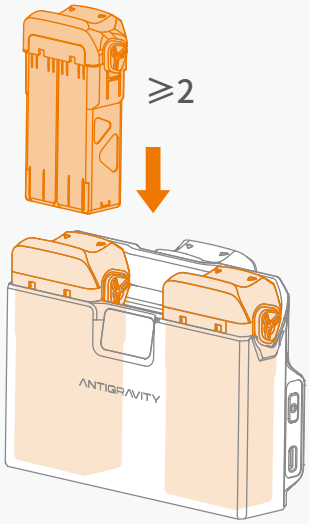

Be aware of pinching when inserting the battery.

2. Press and hold the Function Button on the Charging Hub to activate Smart Power Pooling. Once enabled, the status panel displays low-power batteries transferring charge to the highest-capacity battery.

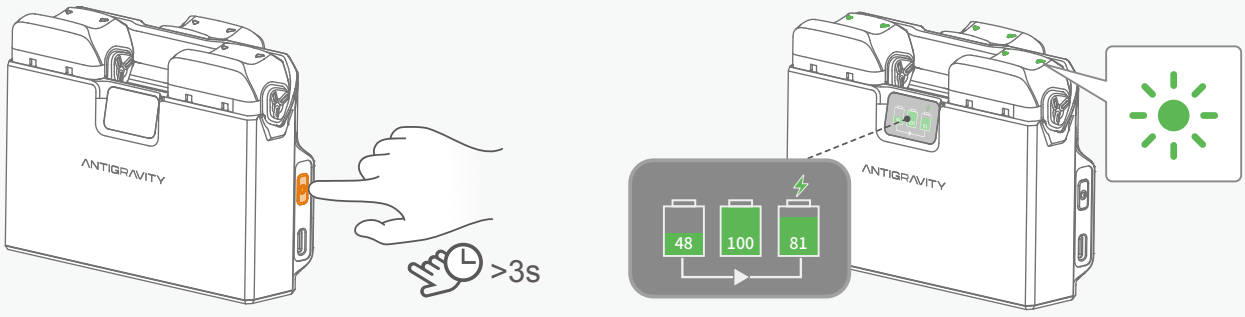

3. To stop the Smart Power Pooling, press and hold the Function button during the process.

The battery level must be higher than 20% to activate the Smart Power Pooling.

© 2025 Antigravity All Rights Reserved

Power Bank

1. Insert at least one flight battery into the Battery Charging Hub.

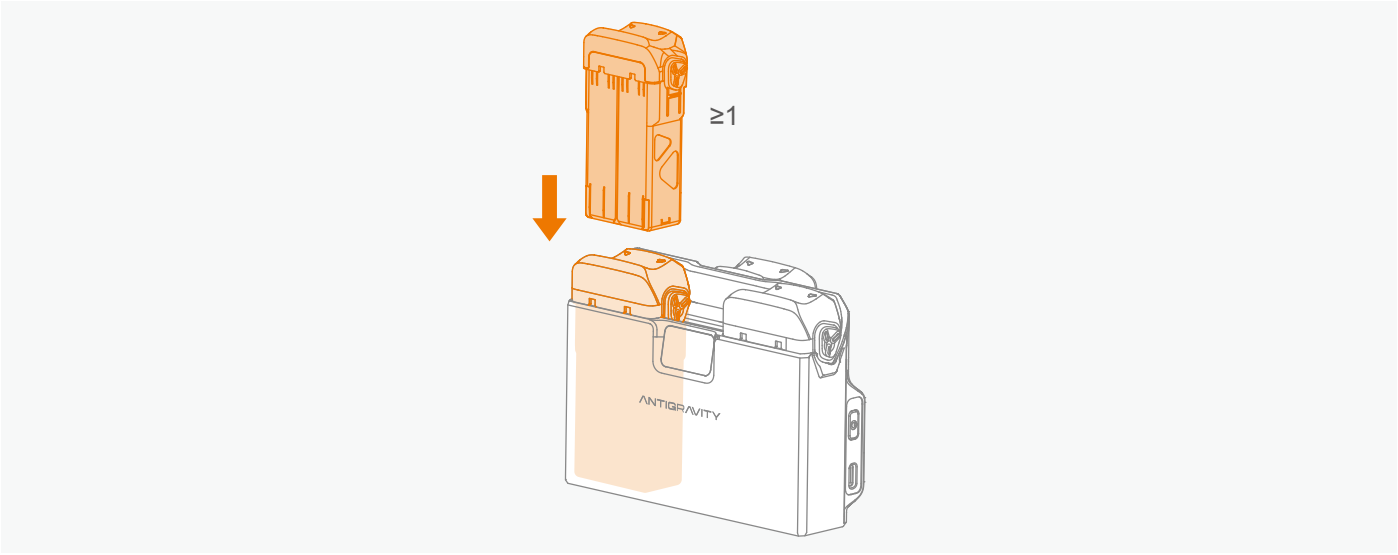

Be aware of pinching when inserting the battery.

2. Connect an external device (such as a mobile phone or motion controller) to the USB Type-C port on the hub.

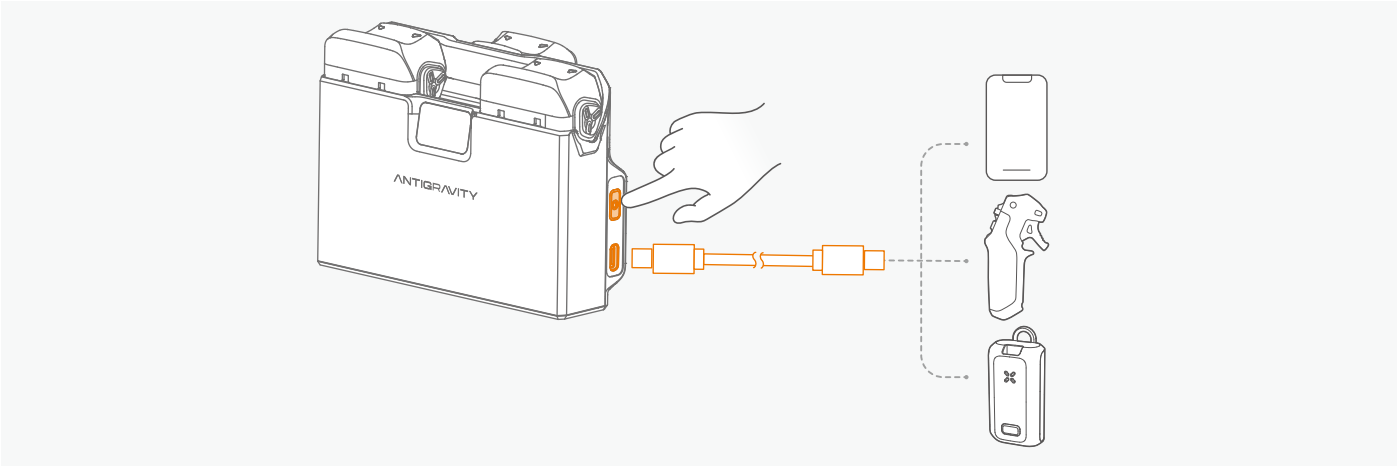

3. Press the Function Button once to begin charging the external device using the power from the inserted battery or batteries.
4. To stop charging, disconnect the external device from the hub.

The battery level must be higher than 10% to activate the power bank mode.

Battery Charging Troubleshooting

The Status Display on the charging hub can display the current system status and provide various error messages. Refer to the table below to find out the meanings of the each icons.

Icon	Description	How to resolve
	Overheat warning	Power off and allow cooling.
	Battery overheat	Power off and allow cooling.

© 2025 Antigravity All Rights Reserved

	Battery Charging Hub overheat	Disconnect the power source to cool down.
	Critical error	Contact the customer service for assistance.
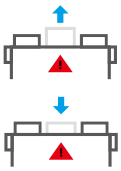	System shut down error	Remove and insert the battery and reboot the Charging Hub.
	Battery temperature low	Power off and let the battery sit at room temperature.
	Charging Hub temperature low	Power off and let the battery sit at room temperature.

Transferring Footages

To transfer extensive footage for editing, it is recommend using the Antigravity Quick Reader to export data from the drone to your editing device.

Quick Reader

The Quick Reader provides both a USB Type-C and a Lightning connector. Remove the cap of your desired connector in order to gain access to the connector.

1. Extract the SD card from your device after powering it off.

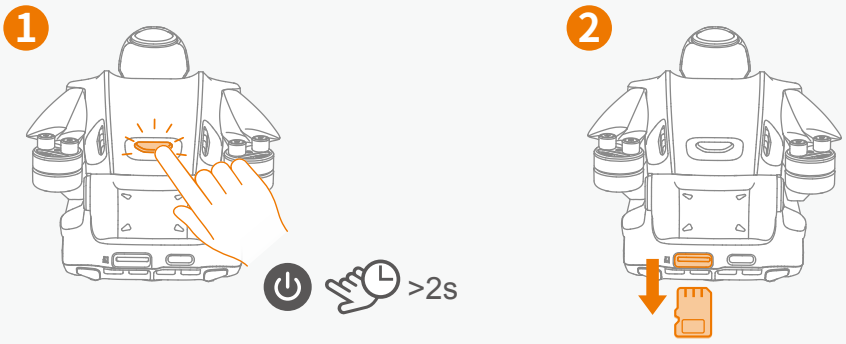

2. Locate the SD card slot on the side of the Quick Reader.

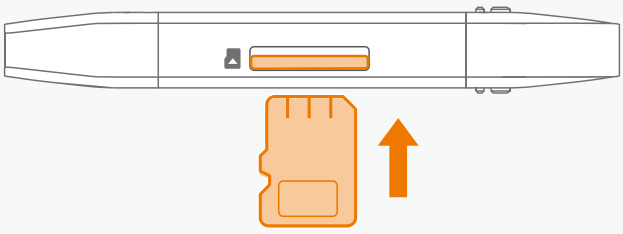

© 2025 Antigravity All Rights Reserved

3. Connect the Quick Reader to the mobile device.

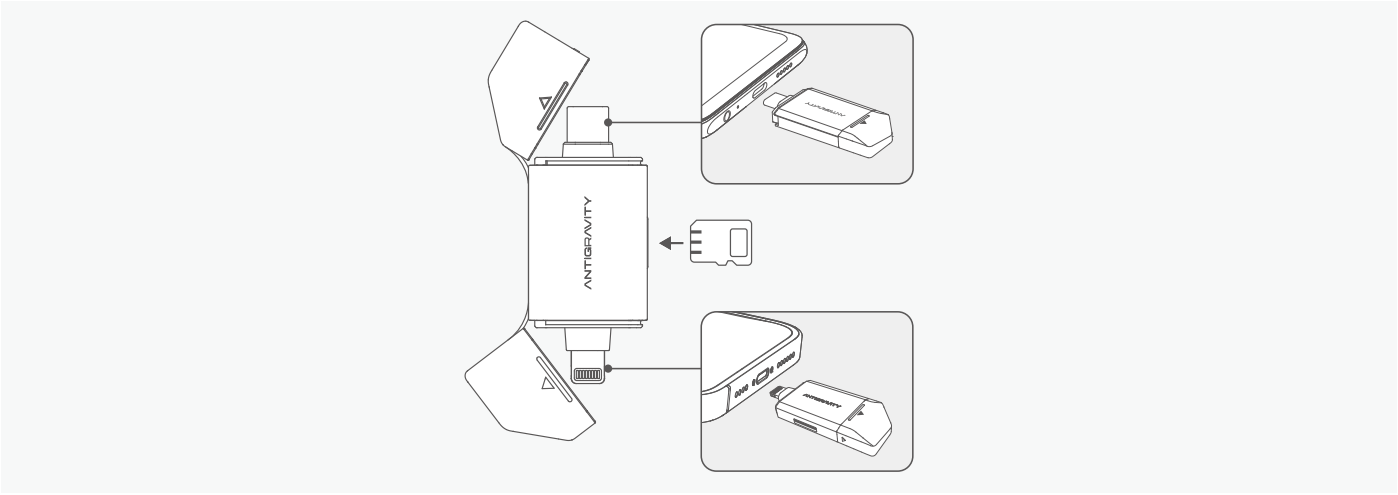

4. Launch the Antigravity App and follow the onscreen instructions to transfer the files.
5. You can now download, export, delete, and perform other simple operations in the Antigravity app.

⚠ · Do not modify the file name of the footage during footage transmission to the Quick Reader.
· The Quick Reader does not support exporting data from the Vision Goggles.

Quick Transfer from Antigravity App

Apart from using the Quick Reader, users can also quickly transfer the footages captured by the drone to their mobile device through wireless connection via the app. Please follow the steps below to export the footages:

⚠ When transferring the footages, users will not be able to take off the drone.

1. Power on the drone. Turn on the Bluetooth and WiFi switches on your mobile device.
2. Launch the Antigravity app and select to connect to the drone.
3. In the album page of the app, choose Quick Transfer - Connect devices - Connect.
4. Once connected successfully, the App will display the list of materials in the drone. Select the footages and proceed with the download.

Vision System

Features

The drone is equipped with downward and forward visual systems as well as infrared sensing systems, these systems work together to safeguard the flight of the drone. The main feature of the visual perception system include:

1. Vision Positioning:

Construct a three-dimensional model using cameras, infrared TOF, and AI algorithms to support autonomous obstacle avoidance, dynamic target tracking, and precise landing functions.

2. Obstacle Avoidance:

The forwards obstacle avoidance system can detect obstacles in front of the drone ranging from 0.5 meters to 18 meters, ensuring safety during flight; the downward obstacle avoidance system is mainly used to detect obstacles beneath the drone ranging from 0.3 meters to 7.5 meters, assisting the drone in avoiding collisions with the ground or other objects during takeoff, landing, and low-altitude flight.

© 2025 Antigravity All Rights Reserved

Vision System Safety Notices

- **Environmental Factors:**
  - Visual and infrared sensing systems operate only in specific scenarios and cannot replace manual control and judgment. In low-light conditions, even with supplementary lighting, the visual system may not perform optimally.
  - The downward visual system may not work properly when flying close to the water surface (around 3 meters), so caution is advised.
  - The visual perception system may struggle to identify large structures with frames and cables.
  - The system may not function properly near surfaces with no distinct pattern changes, areas with weak or strong lighting, extremely dark or bright surfaces, or surfaces that reflect or absorb infrared waves.
- **Flight altitude:**
  - The downward visual system works best at altitudes ranging from 0.3 to 7.5 meters when the GNSS signal is weak. Performance may degrade when flying above 7.5 meters.

Vision Position Detection Range

Sensor Direction	Range	Field of View (FOV)
Forward	0.5 m to 18 m	Horizontal 93°, Vertical 105°
Downward	0.3 m to 7.5 m	Horizontal 107°, Vertical 90°

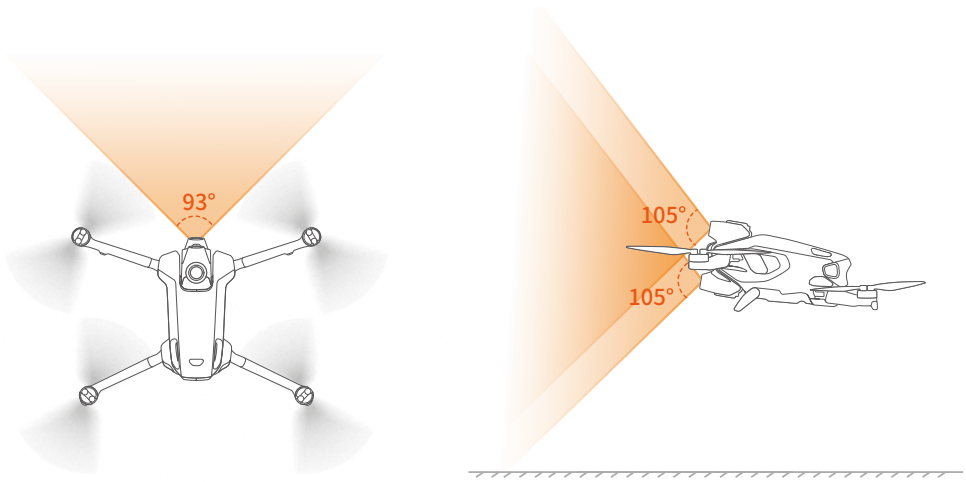

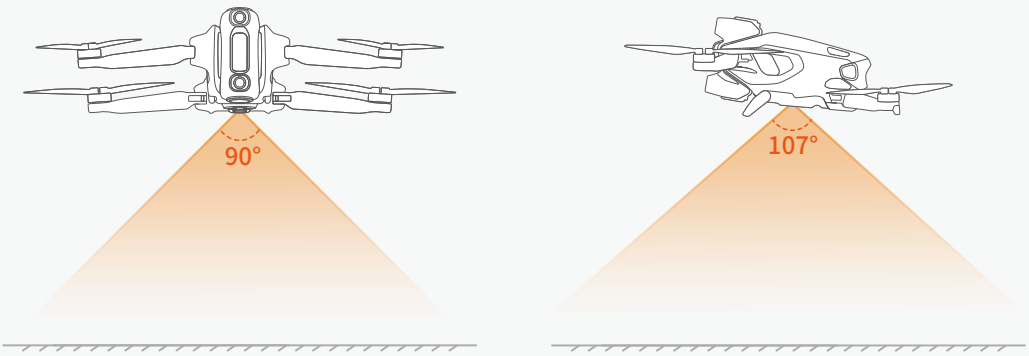

© 2025 Antigravity All Rights Reserved

Flight Recorder

After each takeoff and landing, the drone's flight telemetry data, flight status information, and other parameters will be automatically saved to the built-in storage card. Users can access this data through the application (Antigravity app).

Vision Goggles

Vision goggles is an intuitively designed device for interaction, equipped with a variety of functions to provide users with a comprehensive flying experience.

- **Video Transmission:** Equipped with high-resolution and wide color gamut dual OLED screens, supporting wireless connections such as WiFi, Bluetooth 5.3, etc.
- **Screen Recording :** Screen recording settings include recording of the vision goggles screen (option to record OSD information or only the image transmission screen) and voice recording.
- **Instant playback:** Supports playback of various video formats, allowing you to view captured materials without exporting them.
- **Customize feature:** Provides custom video display function, showcasing individuality.
- **Safety:** Provides voice prompts in case of emergency situations during the flight.

Vision Goggles Overview

Home Button

Press twice on the Home button to enable the ***"Video See-Through"*** feature. Press and hold the Home button to enter linking mode.

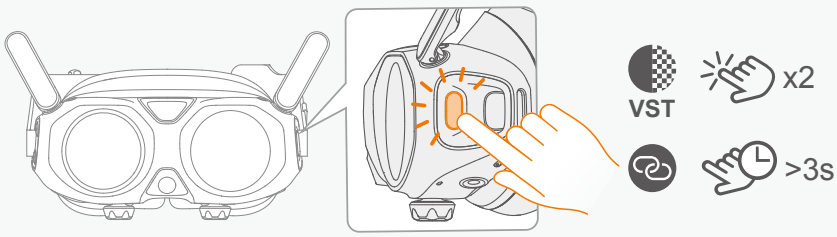

Volume Buttons

Use the up and down arrow keys to adjust the volume of the voice prompts or video play from the speakers.

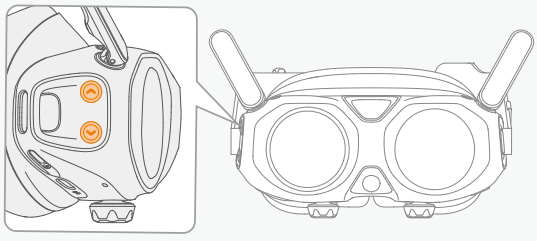

© 2025 Antigravity All Rights Reserved

MicroSD Card Slot

The MicroSD slot situated between the two lenses, refer to the figure below.

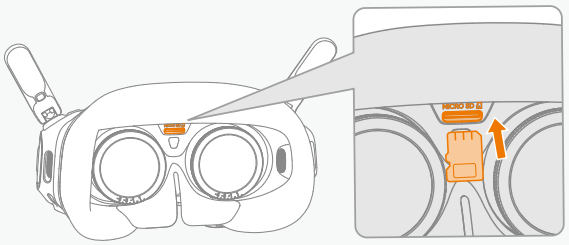

Insert the SD card gently as shown in the figure. To remove the SD card, press inward with a fingernail or a thin pointed object until you hear a click, then the SD card will pop out.

Power Port

The location of the power port for the Vision Goggles is shown in the following figure.

- The Vision Goggles do not come with a built-in battery and must be powered by an external power source.
- The Vision Goggles must be powered by the supplied Antigravity Vision Goggles USB-C to DC power cable. It is not compatible with an external USB cable.
- Keep the power port dry at all times; otherwise, the Vision Goggles will not function properly. In case of water damage or moisture, use a hair dryer to dry the affected port.

Use the Vision Goggles USB-C to DC charging cable to connect the Vision Goggles battery to the Vision Goggles, and attach the Vision Goggles battery strap to the buckle.

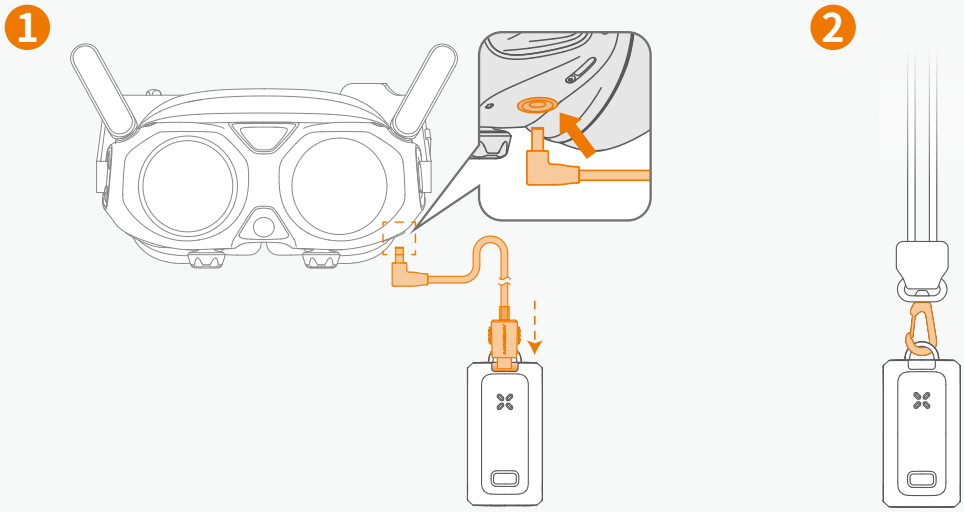

Power on the Vision Goggles

Press once on the power button on the Vision Goggles battery, and then press and hold the power button for more than two seconds to power on.



© 2025 Antigravity All Rights Reserved

Battery Level on the Vision Goggles Battery

Short press the power button once to check the current battery level of the Vision Goggles. For detailed information about the battery level, refer to the table below.



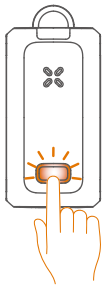

LED1	LED2	LED3	LED4	Battery Level
●	●	●	●	88% - 100%
●	●	●	◉	76% - 87%
●	●	●	◎	63% - 75%
●	●	◉	◎	51% - 62%
●	●	◎	◎	38% - 50%
●	◉	◎	◎	26% - 37%
●	◎	◎	◎	13% - 25%
◉	◎	◎	◎	0% - 12%

Legends Definitions:

- ● LED indicators flash solid green
- ◉ LED indicators flash green
- ◎ LED indicators is off

Powering Off the Vision Goggles Battery

Press once on the power button on the Vision Goggles battery, and then press and hold the power button for more than two seconds to power on. During the process, the LED4 will blink and turn off at the end.



- To ensure the integrity of the data, please make sure to use the power switch to turn on or off the Vision Goggles.
- Do not power off the Vision Goggles by unplugging the power cord.

© 2025 Antigravity All Rights Reserved

Virtual Beam

Basic Operations

While the drone is on the ground or hovering, you can interact with the Vision Goggles by using the Motion Controller via the virtual beam. It is represented as a straight white ray with a circular circle at the end.

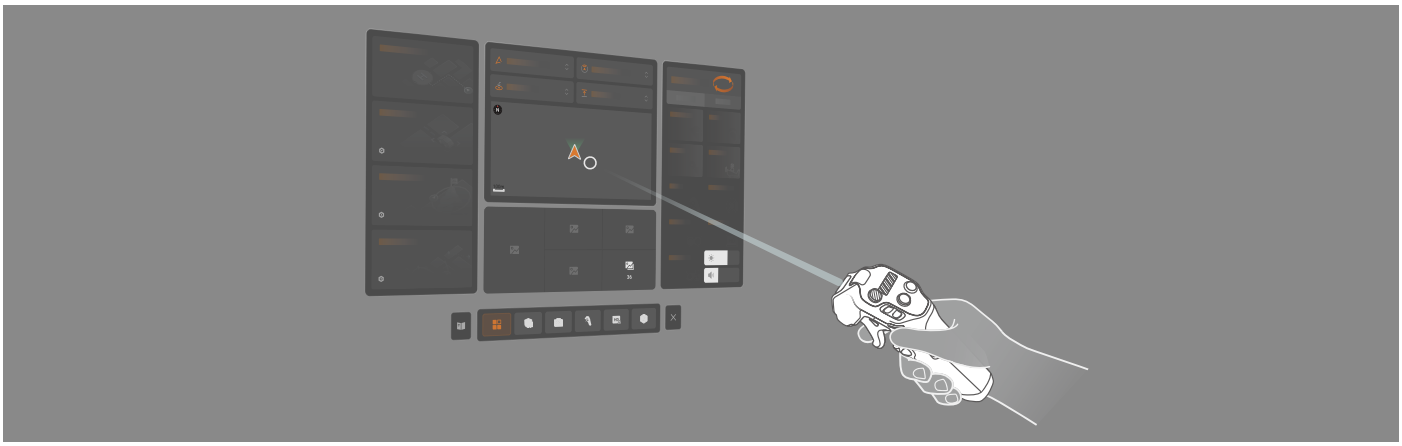

- Waving your arm to move the virtual beam within the Vision Goggles menu. Pressing the throttle trigger to confirm the current selection and the white circle at the end of the beam will change to blue.

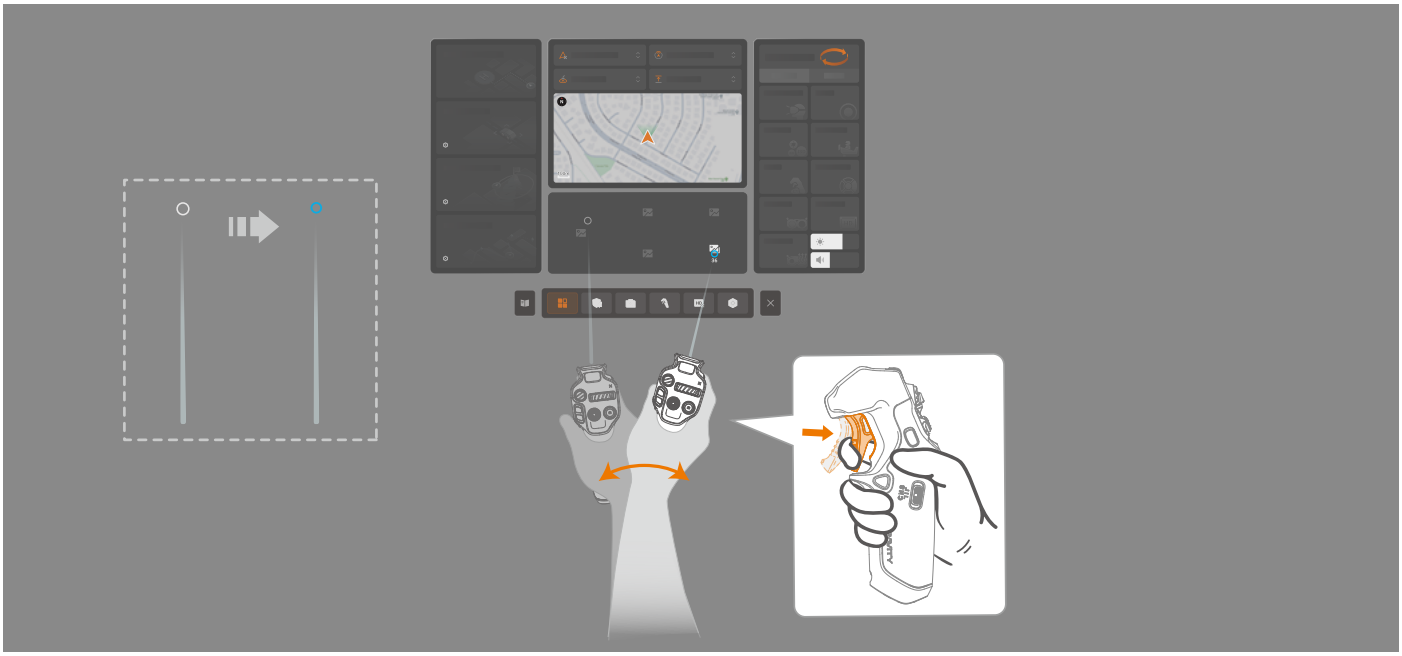

© 2025 Antigravity All Rights Reserved

· While pressing the throttle trigger, swipe upward or downward to scroll through the menu options.

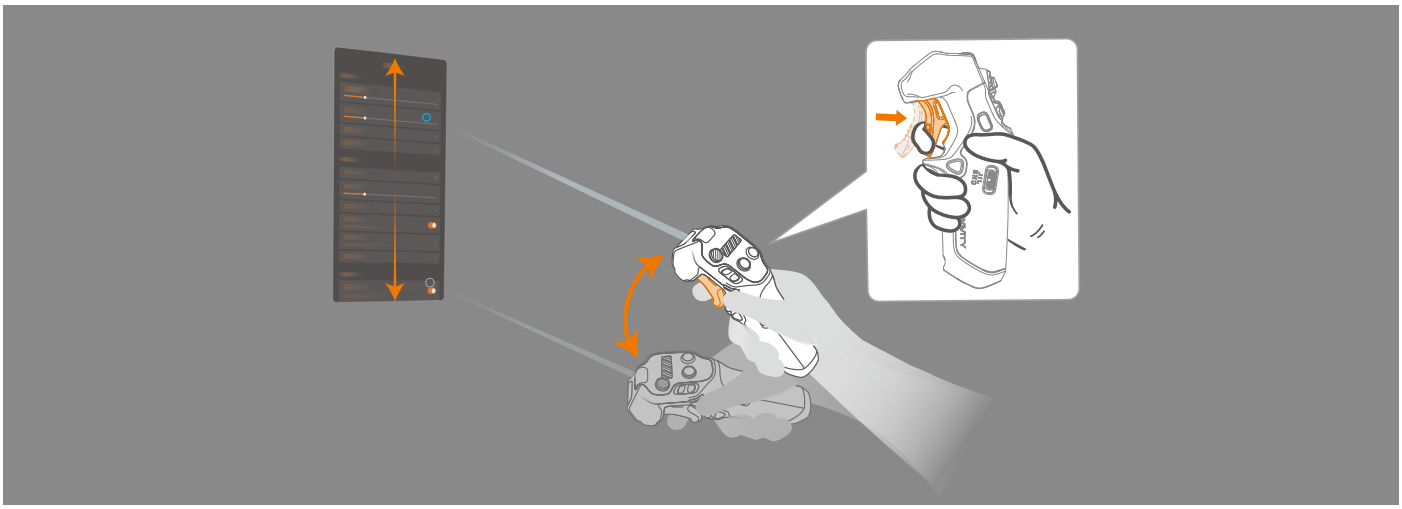

Be sure to remain still and use the virtual beam function in a safe environment on flat ground.

Re-center the Menu

If the Vision Goggle menu UI component has shifted away from the central position, press the 360 dial once to return the menu to the center position.

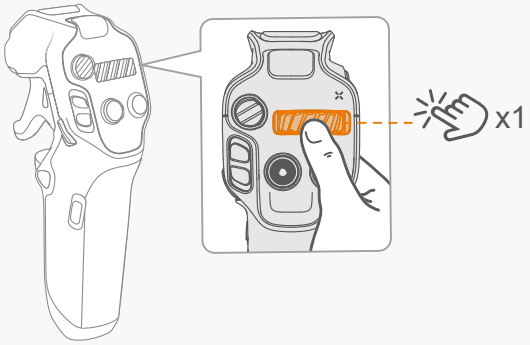

© 2025 Antigravity All Rights Reserved

Vision Goggles Menus

Flight Menu

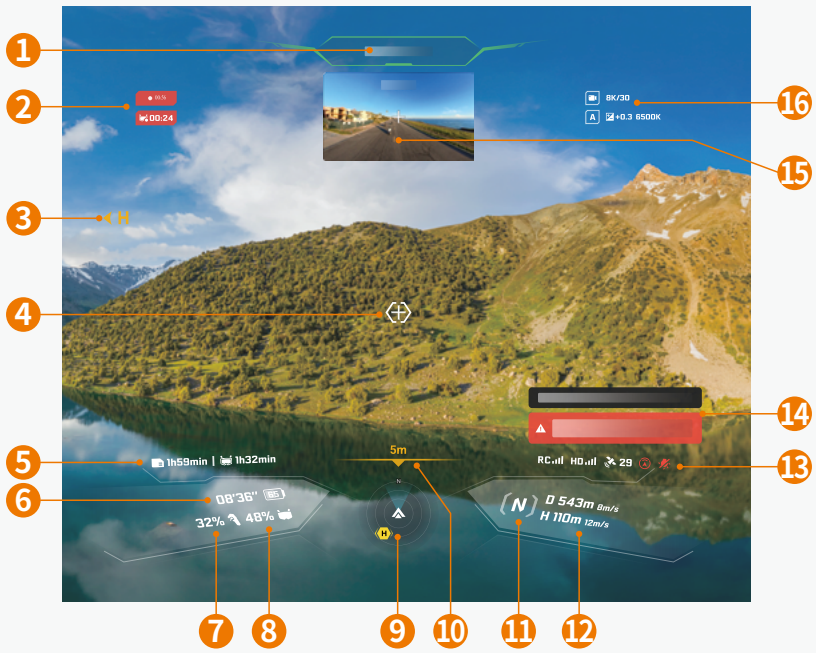

Item	Description	Item	Description
1	**Flight Status Bar** Provides real-time information on drone flight status, including take-off/landing and GNSS signal status. The bar is green when the drone is in normal state, and turns yellow or red when user's discretion is required.	9	**Radar / Mini Map** It shows drone's orientation relative to horizon and heading, and position in relation to return point H. When drone enters return mode or uses preset route, area switches to small map. Map varies depending on the country or region where activation occurs.
2	**Video/ Screen Recording Time** Displays the duration of video or screen recording.	10	**Downward Vision Sensing** Display the distance to the detected obstacle.
3	**Home Point** Orange H mark shows last recorded Home point location, with arrow indicating direction relative to drone's heading.	11	**Flight Mode** Shows current flight mode. For more details, refer to ***"Flight Mode"***.
4	**Navigation Point** Indicating where the drone is heading toward. It will turn yellow 〈〉 or red 〈〉 when obstacle is detected on the flight path.	12	**Flight Speed and Distance** · **D** denotes the distance between the drone to the Home point with vertical speed. · **H** denotes flight altitude and the vertical speed.

© 2025 Antigravity All Rights Reserved

5	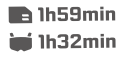	**Footage Storage** Display the remaining time the drone can shoot videos and the remaining time the flight glasses can record screen according to the current settings.	13		**RC and Video Signal / Obstacle Avoidance** ・Display the strength of the video transmission signal of the Vision goggles, the strength of the GNSS signal, whether the obstacle avoidance system is enabled, whether the landing light is on or off. ・Display the signal strength of the remote control device and the image transmission signal strength between the drone and the Vision Goggles. ・The icon is white when the video transmission signal is strong, and turns gray when the signal is lost. ・The icon is orange when the signal strength is moderate, and turns red when the signal is extremely weak.
6		**Drone Battery Level** Display the current battery level and the estimated remaining flight time duration.	14		**Notification Area** Display system alert messages that require user action, such as battery low warning messages.
7		**Motion Controller Battery Level** Displace current battery level for the controller.	15		**Picture-in-picture** Display live feed of the drone's head direction when the flight direction is deviated from the head tracking of the user.
8		**Vision Goggles Battery Level** Displace current battery level for the Vision Goggles.	16	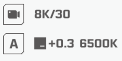	**Camera Parameters** Display the current camera profile.

© 2025 Antigravity All Rights Reserved

Vision Goggle Menu

When the drone is on the ground and powred on or is hovering in the air, users can access the Vision Goggles via the pressing on the menu button on the Grip Motion Controller. The layout of the Visio Goggles menu is as follow:



Item	Description	Item	Description
1	**Advanced Flight Path** You can trigger automatic RTH or use the Deep Track feature to follow the subject that you wish to film, or pre-plan your shot using the Sky Gene and feature from this panel.	5	**Photo Album** Display photos or videos stored in the memory of the Vision Goggles or on the MicroSD card. Select any file for preview. After connecting to the drone, you can preview or play photos or videos stored on the drone.
2	**Notification Area** Display various flight control system status information and the latest user notices, including but not limited to firmware update notifications, flight protections zone database updates, and other information.	6	**Control Mode and Quick Access** · ***Flight Control Mode:*** Toggle between Free Motion and FPV Mode · ***Screen Capture:*** Record the user's first-person view and various menu operations. You can choose to store the recordings in the memory of the Vision Goggles or on an external storage card. · ***De-fog:*** Activate the built-in fan to accelerate the evaporation of moisture. · ***Video Transmission Setting:*** Set parameters such as image transmission aspect ratio. · ***Brightness and Volume Adjustment:*** Adjust the image brightness of the flying goggles, adjust the volume of language prompts, and playback video volume.

© 2025 Antigravity All Rights Reserved

3	**Flight Safety Menu** Users can quickly set and adjust flight safety-related parameters and behaviors through the virtual beam. This includes behaviors in the case of signal loss, obstacle avoidance behaviors, RTH altitude, and maximum altitude values.	7	**Video Tutorials and Documentations** View the official videos tutorials and documents provided.
4	**Mini Map** After the Vision Goggles are connected to the mobile app, the mini-map will display geographic location information of the current area. Users can use this interface to check if there are any restricted flying zones near the flight area. When using features like preset routes, users can view route information through the mini map.	8	**General Settings** When the Vision Goggles are connected to the drone, users can make the following settings through the Setting page:  · Set up flight protection areas, return behavior, and RTH height information. · Find drone information. · Enable or disable automatic landing gear retraction function. · Flight battery and firmware version.  · Advanced shooting settings, users can finetune various settings such as framing guidelines, histograms, low-light stabilization. · Users can also reset camera settings on this page. · After each replacement of the lens, calibration stitching operations need to be performed from this page.  · Adjust advanced settings such as throttle control curve for the overall remote controller feel. · Adjust the mapping relationship of the C1 and C2 custom button functions.  · Set the transmission mode of the image transmission, including options for protected channels, bandwidth, etc.  · In general settings, users can set up account information, update firmware, check the device's firmware version, update flight protections zone data, and perform other operations on this interface.

© 2025 Antigravity All Rights Reserved

Quick Menu

After power on the Vision Goggles battery, press and hold the menu button to access the quick menu.

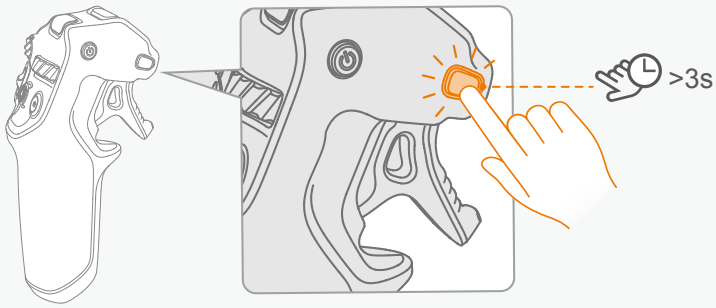

1. While holding the menu button, swing your to move dial to select options on the quick menu.



The dial includes 6 default options, users can adjust the number and content of options through the Vision Goggles menu.

2. Rotate the dial to the desired menu option, release the menu button to select the current option.

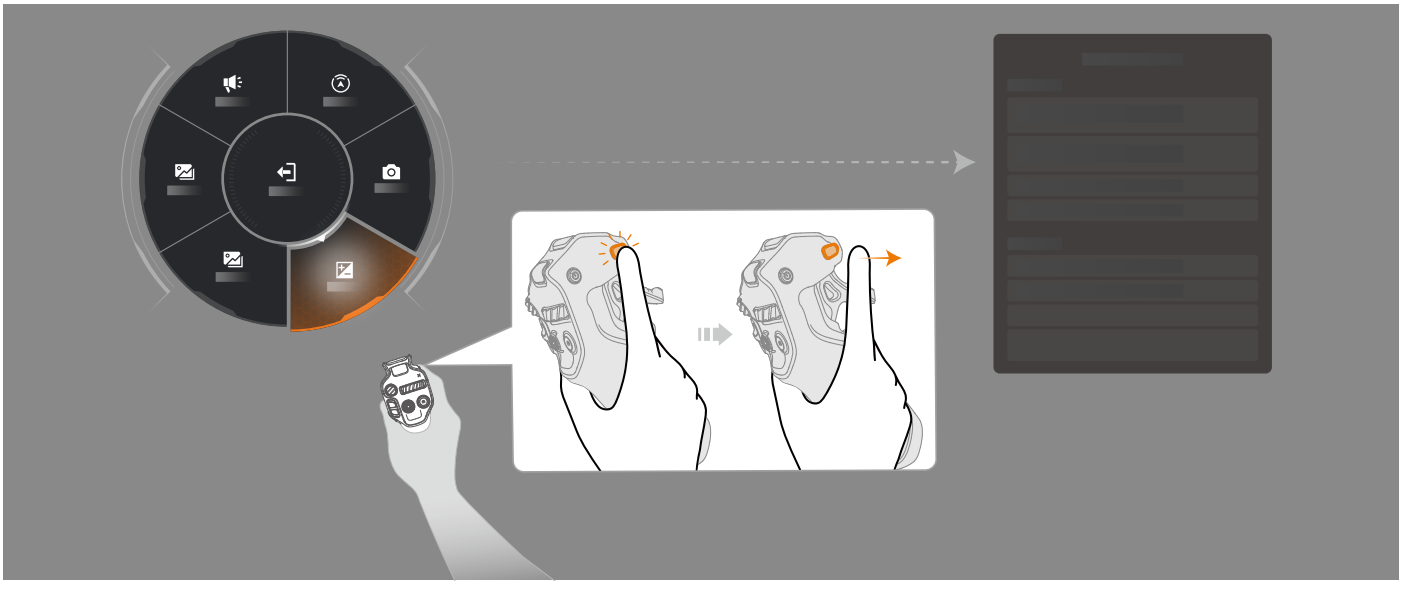

© 2025 Antigravity All Rights Reserved

Outer Display

Outer Display Overview

The outer display, as an important interactive interface of the Vision Goggles, possesses the following key functions:

- Share the flight perspective
- Personalized display

Sharing Flight Perspective

As an essential interactive interface of the Vision Goggles, the outer display screen enables the function of sharing the flight perspective, allowing users to share the visuals of their flight and experience flying moments with others.

- During the flight, the out display will display the real-time image information transmitted by the drone. Spectators near the operator can watch the flight visuals on the secondary screen and share the flying experience together.



Personalized Display

- Supports personalized display function, allowing users to choose different standby videos or images through the "Outer Display and Halo" option in the Vision Goggles menu. The location of this setting is shown in the following figure.

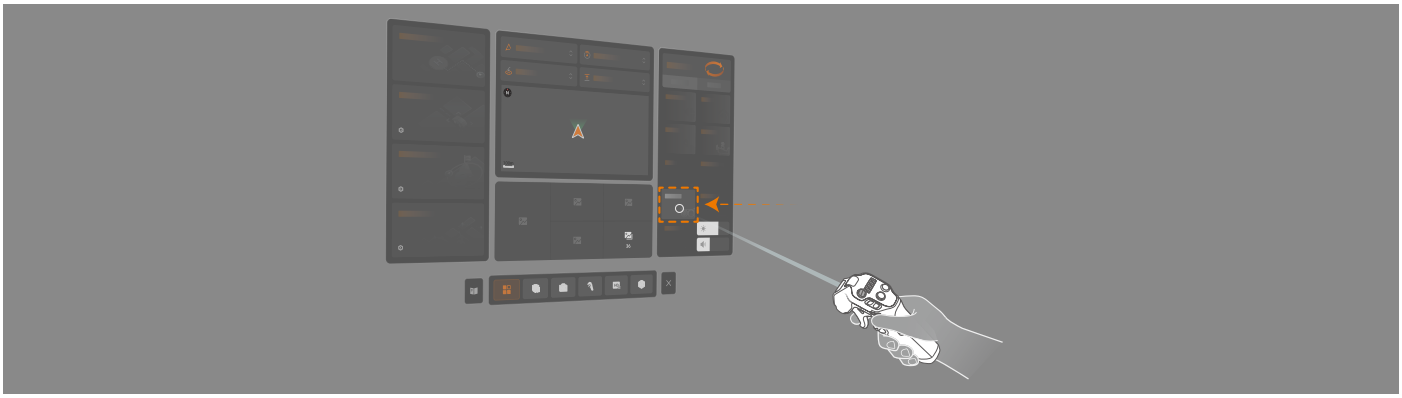

© 2025 Antigravity All Rights Reserved

Video Playback

The Vision Goggles supports video playback on various format, including 3D video. It bring a immersive viewing experience to the users.

1. Insert the MicroSD card that contains the video footages that you wish to view.
2. Power on the Vision Goggles and enter the Vision Goggles menu, access to the "Album" page at the main menu and locate the footages that you wish to play.
3. Select the footages via the virtual beam and pull the throttle trigger to confirm your selection, then the video play back begins.

Exporting the Footages from Vision Goggles

Storage

Vision Goggles have built-in storage and support external memory cards. To learn how to install an external card, refer to the ***"“Vision Goggles Overview”"***. Recorded videos footages are saved to the built-in storage by default, but users can select their preferred storage location in the menu.

Exporting Footages from Vision Goggles

1. Power on the Vision Goggles.
2. Connect the Vision Goggles to a computer using a USB-A to USB-C data cable, and export the files as prompted.

Exporting Footages from SD Card

1. Turn off the Vision Goggles.
2. Use your fingernail or a flat object to press inwards on the MicroSD card until it pops out.

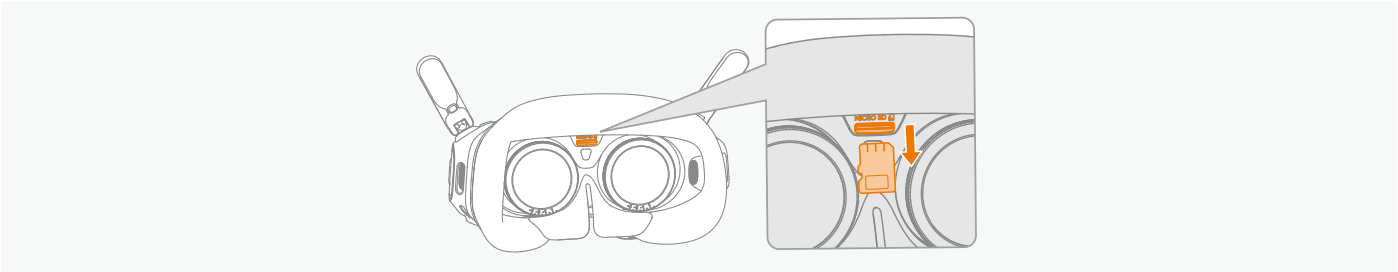

3. Use a card reader you preferred to read and export the recorded video footages from the MicroSD card.

© 2025 Antigravity All Rights Reserved

Video See-Through

The Vision Goggles is equipped with a forward-facing camera, allowing users to view their surroundings without removing the goggles. Follow the instruction below to use this feature:

1. Press twice on the Home button on the left side, the Vision Goggles will project the user's surroundings in black and white images inside the goggles.

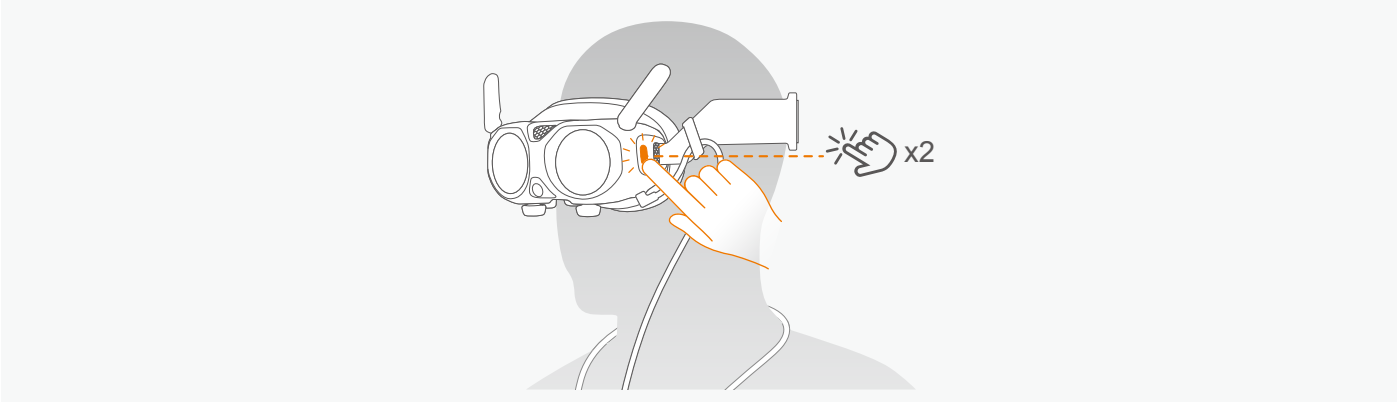

The images from video see-through are displayed in black and white, which is normal.

2. Press twice on the Home button to exist see-through mode, or tap on the button via the virtual beam to return to the Vision Goggles menu.

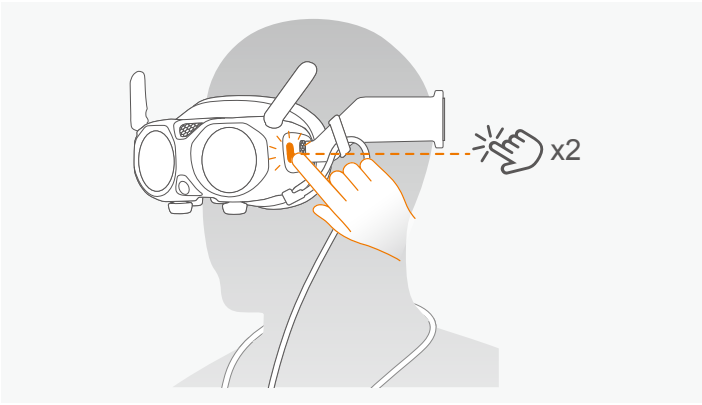

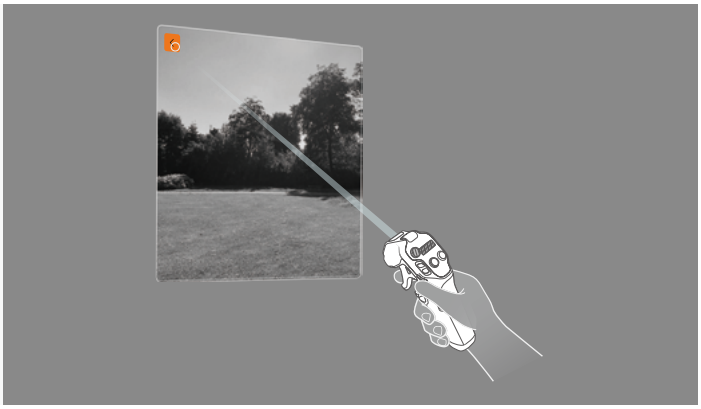

Vision Goggles Safety Notices

- Before using the Vision Goggles, always wipe the lenses inside with the official lens cleaning cloth provided to ensure the best user experience.
- Do not use alcohol or other solvents to clean the optical lenses of the Vision Goggles. It is recommended to use the official lens cleaning cloth.
- If the degree of vision correction exceeds 200 to 500 degrees, users will need to separately purchase lenses to suit their needs.
- It is recommended to refer to the scale range on the lens when wearing the Vision Goggles for the first time, manually adjust the appropriate degree, and then fine-tune when wearing them.
- Be careful when adjusting the diopter adjustment knob as there is a limited range of adjustment. Do not exceed the range to avoid damage.
- Avoid direct sunlight on the lenses of the Vision Goggles as it may cause damage to the lenses.

© 2025 Antigravity All Rights Reserved

Grip Motion Controller

Power Button and Battery Level Indicator

Powering On/Off the Grip Motion Controller

· Press once on the power button to check the current battery level.

· Press once on the power button and hold it for two seconds to power on or off the Grip Motion Controller.

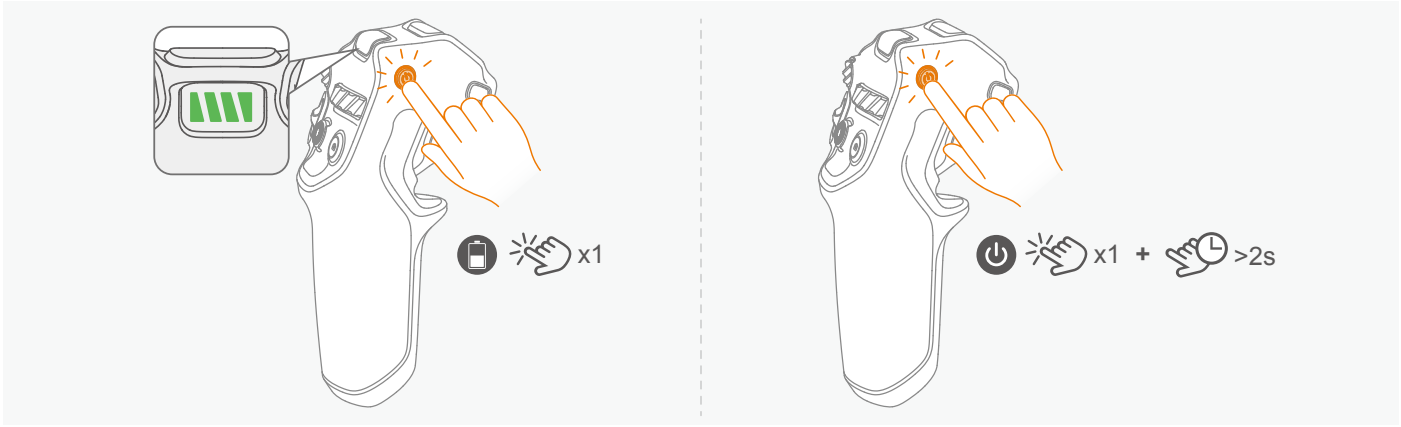

Charging the Grip Motion Controller

The charging port is the end of the handle. Connect a charging cable to this port to charge the controller.

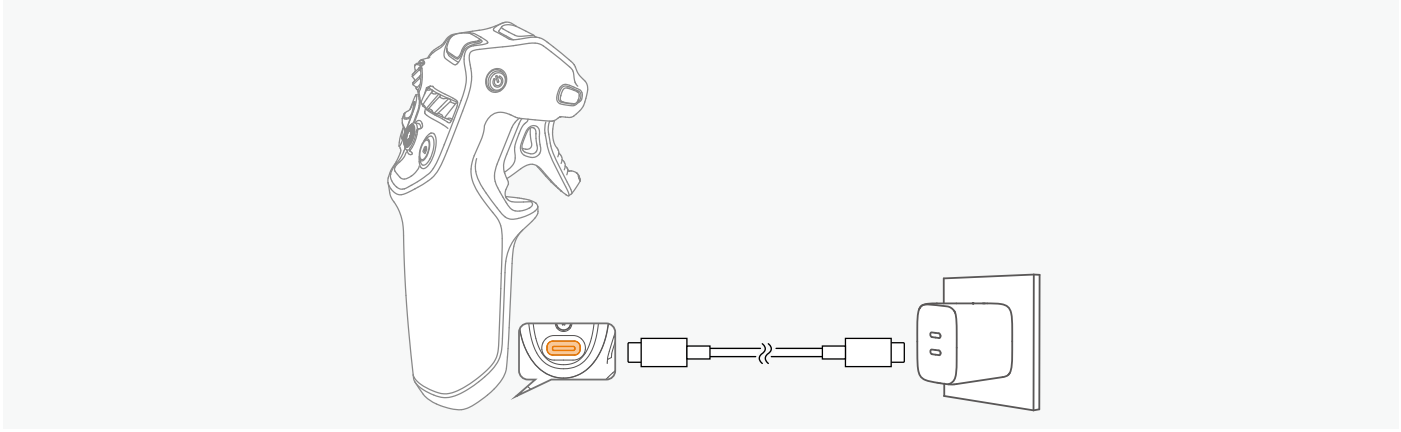

Battery Level Indicators

Apart from displaying the current battery level, the indicator also serves as the system indicator to display information such as linking status and so on.



© 2025 Antigravity All Rights Reserved

The blinking pattern of the indicators is as following.

Blinking Patter	Status
	Four green bars indicate that battery level is approximately 100-70%.
	Three green bars indicate that battery level is approximately 69-50%.
	Two green bars indicate that battery level is approximately 49-20% .
	One yellow bar indicates that battery level is approximately 19-10% .
	Red bar indicates the battery level is below 10%.
	Blinking green LEDs indicates the controller is searching for the drone.
	Loop playback indicates it is in the linking state.
	Red bars indicate critical system errors, which may arises from: · IMU error · Compass error · Overheating of the Grip Motion Controller · Lost of video transmission signal · No GPS signal · Voltage error · Critical low battery warning · Critical system error
	Yellow bar indicates general system error, which may arise from: · Weak video transmission signal · Weak GPS signal · Low battery warning · Low storage warning

© 2025 Antigravity All Rights Reserved

Grip Motion Controller Buttons

Button	Functions
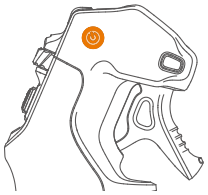	**Power Button** Power on/off ・Press once, and the hold to power on or off the Grip Motion Controller. Hold for more than 10 seconds to force shutdown the Grip Motion Controller. Linking ・Power on and press and hold for four seconds to start linking.
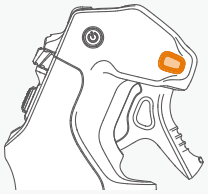	**Menu Button** Short press or long press to enter the general menu or quick menu of the Vision Goggles. General Menu ・When linked to the goggles, press once to enter the general menu, press again to exit. Quick Menu ・Press and hold to enter the quick menu. Release to confirm the selection and exit. Control Mode ・Press twice to toggle between Free Motion and FPV Mode.
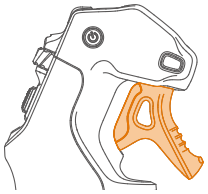	**Throttle Trigger** In Flight Menu ・Press inward or release the button to accelerate or decelerate the flight speed of your drone. In the General or Quick Menu ・Press once to confirm the selection, press and hold to scroll up and down.
	**Emergency Break/ RTH Button** This button manifests differently according to the flight status of the drone. Mid-air ・While the drone is in mid-air, press once briefly to make the drone stop immediately. RTH ・While the drone is in mid-air, press and hold to initiate RTH. The drone will begin to return to the recorded Home point. Abort RTH ・While the drone is in RTH, short press once to abort the RTH, and the drone will begin to hover.
	**360 Dial Button** When drone is grounded ・Turn left or right to adjust the camera view. While Hovering ・Turn left or right to change the heading of the drone. While view in the Vision Goggles ・Press inward to recenter the perspective of the heading of the drone.

© 2025 Antigravity All Rights Reserved



Flight Slider

Use the slider to take off or land your drone and adjust the flight altitude.

Unlocking Motors

- Push the flight slider upwards in two short bursts to unlock the motors, putting them into idle mode. Push the flight slider twice to stop the motors.

Taking Off

- While the motors are unlocked, push the slider continuously for more than two seconds to allow the drone to ascend. The drone will take off and hover at 1.2m. During the flight, push the slider upwards or downwards to adjust the flight altitude of the drone.

Landing

- Push the slider downwards to allow the drone to descend. The drone will slowly land on the recorded Home point and stop the motor.



Record Button

By default, press once to switch to video recording mode. Press again to show the PIP window.



Shutter

By default, press once to switch to camera mode. Press again to take the picture.

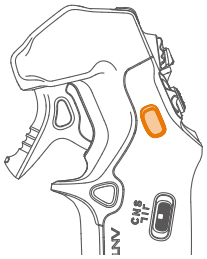

Customize C2 Button

Landing Gear

- Press twice to lower or retract the landing gears.

Customize

- Customize the function of the C2 button through the general menu.

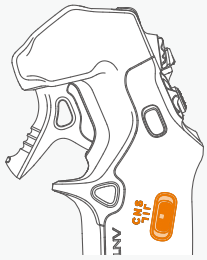

Flight Mode Toggle

Toggle to switch the flight mode into the follow three flight modes:

- N (Normal) mode
- S (Sport) mode
- C (Cine) mode

© 2025 Antigravity All Rights Reserved

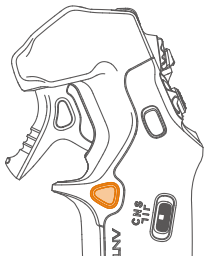

Customize C1 Button

Tracking Gear

- When drone is in mid-air, long press the button to select the tracking subject from the live view.

Landing Light

- When drone is in mid-air, short press the button to turn on the landing light.

Customize

- Customize the function of the C1 button through the general menu.

Grip Motion Controller Signal

For optimal transmission quality, ensure there are no obstacles between the Grip Motion Controller and the Vision Goggles.

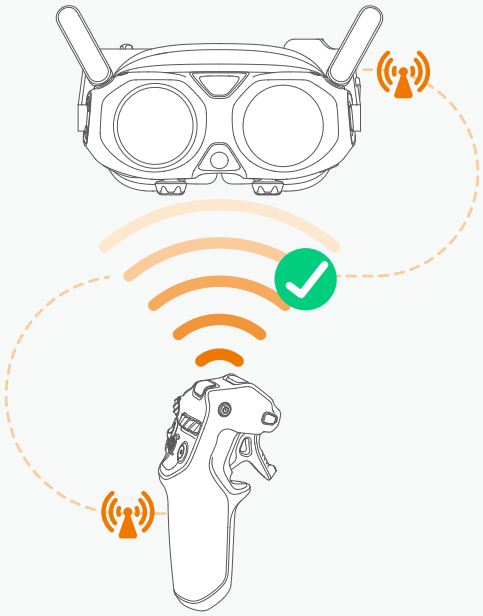

- It is recommended to use the motion controller in an open and unobstructed environment, ensure there is no obstacles between the motion controller and the drone.
- Ensure that there are no other radio transmission devices operating adjacent to the motion controller, as they may create interference.

Alert Sounds

Low Battery Alert

When the motion controller's battery is low, an alarm will sound. It can be canceled by pressing once the power button. However, the alarm cannot be muted when the battery level is below 5% in order to prompt the user to return and land.

RTH Alert

The Grip Motion Controller will beep alerts while the drone is in the RTH process. Note that this beeping alert cannot be muted as long as the drone is still in RTH state.

© 2025 Antigravity All Rights Reserved

Antigravity App

Connect the Vision Goggles to the mobile device, launch the Antigravity app to enter the home page. The home page includes the following major features:

- Explore aerial hot spots around your area. Understand the concept of flight protection areas, policies and other information, and watch video tutorials and user manuals for product knowledge.
- Brows your footages from albums on your drone or your mobile devices, or use Studio for creative video editing and sharing them on the social media.
- Log in to view account information and flight records.
- Other functions, such as firmware updates, aircraft searching, and accessing the store.

- Before using the Antigravity app, ensure your mobile device is fully charged.
- Cellular data package is required while using the Antigravity app, contact your carrier for pricing.
- Read all safety guidelines and disclaimers from the app and understand local regulations.
- Before using the Antigravity App, you must read and agree the terms of use and privacy policy, please read and understand the terms and policies.

Product Specification

A1 Drone

Drone	
Model	DE001
Maximum Takeoff Weights	249 g (0.548 lbs) with Standard Flight Battery 291 g (0.642 lbs) with High-Capacity Flight Battery
Dimensions	Folded：141.3 mm × 96.2 mm × 81.4 mm 5.56 inches x 3.79 inches x 3.21 inches (L×W×H) Unfolded：308.6 mm × 382.3 mm × 89.2 mm 12.15 inches x 15.05 inches x 3.51 inches (L×W×H)
Max Ascent Speed	C mode: 3 m/s N mode: 6 m/s S mode: 8m/s
Max Descent Speed	C mode: 3 m/s N mode: 6 m/s S mode: 8m/s
Max Horizontal Speed*	C mode: 3 m/s N mode: 12 m/s S mode: 16 m/s
Max Takeoff Altitude	4,000 m or 13,123 ft (with Standard Flight Battery) 3,000 m 9,842 ft (with High-Capacity Flight Battery)
Max Flight Time	Approx. 22 mins (with Standard Flight Battery)** Approx. 35 mins (with High-Capacity Flight Battery)**
Max Flight Distance	Approx . 14 km or 8.6 miles (with Standard Flight Battery)** Approx . 32 km or 19.8 miles (with High-Capacity Flight Battery)**

© 2025 Antigravity All Rights Reserved

Max Wind Resistance	10.7 m/s or 23.9 mph
Operating Temperature	-10°C - 40°C (14°F - 104°F)
Global Navigation Satellite System	GPS + BeiDou + Galileo
Hovering Accuracy Range (GNSS)	Horizontal: ±0.5 m, Vertical: ±0.5 m
Hovering Accuracy Range (Vision)	Horizontal: ±0.1 m, Vertical: ±0.1 m
Internal Storage	20 GB
Supported Storage Card	MicroSD
List of Recommended Storage Card	SanDisk Extreme PRO 64GB V30 U3 A2 microSDXC SanDisk Extreme PRO 128GB V30 U3 A2 microSDXC SanDisk Extreme PRO 256GB V30 U3 A2 microSDXC SanDisk Extreme PRO 512GB V30 U3 A2 microSDXC SanDisk Extreme PRO 1TB V30 U3 A2 microSDXC Lexar Silver Plus 64GB A2 V30 microSDXC Lexar Silver Plus 128GB A2 V30 microSDXC Lexar Silver Plus 256GB A2 V30 microSDXC Lexar Silver Plus 512GB A2 V30 microSDXC Lexar Silver Plus 1TB A2 V30 microSDXC Kingston CANVAS Go! Plus 64GB A2 V30 microSDXC Kingston CANVAS Go! Plus 128GB A2 V30 microSDXC Kingston CANVAS Go! Plus 256GB A2 V30 microSDXC Kingston CANVAS Go! Plus 512GB A2 V30 microSDXC Kingston CANVAS Go! Plus 1TB A2 V30 microSDXC
Ground Noise Level	71.859 dB (Hovering) 71.580 dB (In flight, 3 m/s)
Constant Noise Level	70.682 dB (Hovering) 69.872 dB (In flight, 3 m/s)
360 Camera	
Sensor Size	1/1.28 inch
Aperture	F2.2
ISO Range	100 - 6400
Shutter Speed	Video: 1/8000 Photo: 1/8000 - 1/2
White Balance	2,000K - 10,000K

© 2025 Antigravity All Rights Reserved

Max Image Size	Approx. 55MP (10486 × 5248) Approx. 14MP (5248 × 2624)
Camera Mode	Normal, HDR, Brust, AEB, Interval
Video Resuoltuion	8K: 7680 × 3840@30/25/24fps 5.2K: 5248 × 2624@60/50/30/25/25fps 4K: 3840 × 1920@100fps 4K Slo-mo: 3840 × 1920@30/25/24fps
Video Format	INSV, Export via Antigravity app or Stuido desktop applicaiton.
Photo Format	INSP, Export via Antigravity app or Stuido desktop applicaiton. DNG
Max Video Bitrate	170 Mbps
Video Encode Format	H.264, H.265
Supported File System	exFAT
Vision Senors	
Forward	Measurement Range: 0.5 m - 18 m Effective Sensing Speed: Flight Speed ≤1 m/s FOV: Horizontal 93°, Vertical 104°
Downward	Measurement: 0.3 m - 7.5 m Effective Sensing Speed: Flight Speed ≤6 m/s FOV: Horizontal107°, Vertical 90°
Video Transmisison	
Video Tranmission System	OmniLink 360
Live View Quality	2k@30fps
Operating Frequency	2400 - 2483.5 MHz* 5150 - 5250 MHz* 5725 - 5850 MHz* * Availability subject to countries and regoins. Local law and regulations apply.
Transmitter Power (EIRP)	2.4 GHz: < 20 dBm (CE / SRRC / MIC / FCC) 5.1 GHz: < 20 dBm (FCC / CE) 5.8 GHz: < 20 dBm (FCC / SRRC), < 14 dBm (CE)
Max Signal Transmission Distance (unobstructed, free of interference)	10 km (FCC) 8 km (SRRC) 6 km (CE)

© 2025 Antigravity All Rights Reserved

Latency	Video Recording 5.7K: 150 ms 8K: 180 ms Video Recording Disabled 5.7K: 120 ms 8K: 150 ms
Antenna	4 antennas, 2T4R
Wi-Fi	
Protocol	802.11a/b/g/n/ac
Operating Frequency	2400 MHz - 2483.5 MHz* 5150 MHz - 5250 MHz* 5275 MHz - 5850 MHz* * Availability subject to countries and regoins. Local law and regulations apply.
Transmitter Power (EIRP)	2.4 GHz: < 20 dBm (CE / SRRC / MIC / FCC) 5.1 GHz: < 20 dBm (FCC / CE) 5.8 GHz: < 20 dBm (FCC / SRRC), < 14 dBm (CE)
Bluetooth	
Protocol	Bluetooth 5.0
Operating Frequency	2.400 GHz - 2.4835 GHz
Transmitter Power (EIRP)	< 10 dBm
Standard Flight Battery	
Model	BDE-mini-2360-7.16
Capacity	2360 mAh
Weight	Approx. 67.5 g (0.15 lb)
Rated Voltage	7.16 V
Charging Voltage	8.6 V
Cell Type	Li-ion 2S
Energy	16.9 Wh
Charging Temperature Range	5 - 45°C or 41 - 113°F, Charging stops when temperature exceeding 55°C (131°F)

© 2025 Antigravity All Rights Reserved

Charging Time	Single battery: 45 mins*** Three batteries: 2 hours and 15 mins***
High-Capacity Flight Battery	
Mode Name	BDE-max-4345-7.16
Capacity	4345 mAh
Weight	Approx. 108.6 g (0.23 lbs)
Rated Voltage	7.16 V
Charging Voltage	8.6 V
Cell Type	Li-ion 2S
Energy	31.11 Wh
Charging Temperature Range	5 - 45°C or 41 - 113°F, Charging stops when temperature exceeding 55°C (131°F)
Charging Time	Single battery: 60 mins*** Three batteries: 3 hours***
65W GaN Fast Charger	
Model	ADT-65BDC-P
Input Voltage	90 - 264V (47 - 63Hz)
Output Power	5V ~ 20V@65W / 5A MAX
Operating Temperature	-20 ~ 40° C
Battery Charging Hub	
Model	CINSBANA
Weight	Approx 118.5 g
USB C Input	PPS protocol: 5 - 10V / 5A PD protocol: 5V - 3A / 9V - 5A / 12V - 5A / 15V - 4A
USB C Output	PD protocol: 30W, 15V - 2A / 12V - 2.5A / 9V - 3A / 5V - 3A

© 2025 Antigravity All Rights Reserved

Charging Time	Standard Flight Battery: · Single: 45 mins · Three: 2 hours 15 mins High-Capacity Flight Battery: · Single: 60 mins · Three: 3 hours

*Sea level and windless

** Environment temperature at 25°C (77°F) , altitude less than 50 m (164 ft), in a wind-free lab environment. Camera set at 5.2K resolution without recording.

*** Battery life may vary depending on external environment, usage, and firmware. Actual experience may vary.

**** Charging from the Antigravity 65W GaN Charger via the Antigravity Battery Charging Hub.

Vision Flight Goggles

Flight Goggles	
Model	DGS001
Weight	Approx. 340 g (battery not attached)
Dimensions	Folded: 174 mm × 106 mm × 92 mm (L×W×H) Unfolded: 200 mm × 106 mm × 115 mm (L×W×H)
Inner Display Size	1.03 inch Micro-OLED
Inner Display Resolution	2560 × 2560
Inner Display Refresh Rate	72 Hz
Interpupillary Distance Range	59 - 72 mm
Diopter Adjustment Range	-5.0 D to +2.0 D
FOV	DFOV 90° HFOV/VFOV 65°
Screen Recording Format	MP4
Playback Format	MP4, MOV, JPG, PNG, INSP, INSV
See-through FOV	HFOV 93°, VFOV 93°, DFOV 115°
Operating Temperature	-10°C to 40°C (14°F to 104°F)
Power Input	USB-C with dedicated external battery

© 2025 Antigravity All Rights Reserved

Internal Storage	Approx. 30 GB
Supported Storage Card	MicroSD
List of Recommended Storage Card	SanDisk Extreme PRO 64GB V30 U3 A2 microSDXC SanDisk Extreme PRO 128GB V30 U3 A2 microSDXC SanDisk Extreme PRO 256GB V30 U3 A2 microSDXC SanDisk Extreme PRO 512GB V30 U3 A2 microSDXC SanDisk Extreme PRO 1TB V30 U3 A2 microSDXC Lexar Silver Plus 64GB A2 V30 microSDXC Lexar Silver Plus 128GB A2 V30 microSDXC Lexar Silver Plus 256GB A2 V30 microSDXC Lexar Silver Plus 512GB A2 V30 microSDXC Lexar Silver Plus 1TB A2 V30 microSDXC Kingston CANVAS Go! Plus 64GB A2 V30 microSDXC Kingston CANVAS Go! Plus 128GB A2 V30 microSDXC Kingston CANVAS Go! Plus 256GB A2 V30 microSDXC Kingston CANVAS Go! Plus 512GB A2 V30 microSDXC Kingston CANVAS Go! Plus 1TB A2 V30 microSDXC
Video Transmission	
Video Transmission System	OmniLink 360
Operating Frequency	2400 - 2483.5 MHz* 5150 - 5250 MHz* 5725 - 5850 MHz* * Availability subject to countries and regions. Local law and regulations apply.
Transmitter Power (EIRP)	2.4 GHz: < 20 dBm (CE / SRRC / MIC / FCC) 5.1 GHz: < 20 dBm (FCC / CE) 5.8 GHz: < 20 dBm (FCC / SRRC), < 14 dBm (CE)
Latency	Video Recording 5.7K: 150 ms 8K: 180 ms Video Recording Disabled 5.7K: 120 ms 8K: 150 ms
Max Video Bitrate	30 Mbps
Antenna	six antennas, 2T2R (dynamically switching)

© 2025 Antigravity All Rights Reserved

Wi-Fi	
Protocol	802.11a/b/g/n/ax
Operating Frequency	2400 - 2483.5 MHz* 5150 - 5250 MHz* 5725 - 5850 MHz* * Availability subject to countries and regions. Local law and regulations apply.
Transmitter Power (EIRP)	2.4 GHz: < 20 dBm (CE / SRRC / MIC / FCC) 5.1 GHz: < 20 dBm (FCC / CE) 5.8 GHz: < 20 dBm (FCC / SRRC), < 14 dBm (CE)
Download Speed	80 MB/s
Antenna	2T2R
Bluetooth	
Protocol	Bluetooth 5.2
Operating Frequency	2.400 GHz - 2.483 GHz
Transmitter Power (EIRP)	< 10 dBm
GFSK	
Compatible	Antigravity Grip Motion Controller
Operating Frequency	2.400 GHz - 2.483 GHz
Transmitter Power (EIRP)	< 10 dBm
Transmission Distance	Approx. 10 m (32 ft)
Vision Goggles Battery	
Model	DGS-4500-7.3
Weight	Approx. 175 g
Battery Life	Approx. 2 hours (ambient temperature at 25°C or 77°F)
Rated Voltage	7.3 V
Capacity	4500 mAh
Charging Power	5V⎓3A; 9V⎓3A; 12V⎓2A

© 2025 Antigravity All Rights Reserved

Charging Time	Less than 2.5 hours
Charging Temperature	3°C - 45°C (Charging stops when temperature is higher than 55°C or 131°F.)
Supported Power Cable	Compatible with Antigravity USB-C to DC power cable only.

Grip Motion Controller

Controller	
Model	SRCSE001
Weight	Approx. 115 g
Dimensions	143 mm × 45mm × 72.5 mm (L×W×H)
Operating Temperature	-10°C - 40°C
Operating Frequency	2.400 GHz - 2.483 GHz
Transmitter Power (EIRP)	< 10 dBm
Transmission Distance	Approx. 10 m (32 ft)
Battery Life	Approx. 4 hours (ambient temperature at 25°C)
Charging Port	USB-C (5V/2A)
Charging Time	Approx. less than 2.5 hours (ambient temperature at 25°C)
Charging Temperature	5°C to 45°C (Charging stops when temperature is higher than 55°C or 131°F.)
Capacity	2300 mAh
Rated Voltage	3.6V

© 2025 Antigravity All Rights Reserved

Frequently Asked Questions (FAQ)

1. What can I do if the Battery Charging Hub become unresponsive after the firmware update?

This issue may arise from the unexpected power outage during the firmware update or for other reasons. Please follow one of the following solutions to resolve the issue

- Download the desktop application Antigravity Sync from the official website. Install this application on your desktop and attempt to update the firmware of the Battery Charging Hub.
- Connect the Battery Charging Hub to a power source, power on, and let it sit still for more than 5 minutes. The Battery Charging Hub will attempt to roll back the firmware, and it should resume normal operation once the roll back is complete.

2. How to view the E-tag label for compliance information?

Power on the Vision Flight Goggles, press on the menu button on the Motion Controller and access to the general setting page. Select " " - "About " - " Compliance" at the bottom right corner to access to the E-tag.

3. Why is the camera's stitching calibration not working properly?

It is recommended to carry out stitching calibration in a open outdoor environment. And, due to system limitations, users will not be able to carry out the stitching calibration the following scenarios:

- Motors are rotating and the drone is in idle state.
- When it in the low light environment.

Appendix

Compliance Information

MOTM Information

The aircraft’s Maximum Take-Off Mass (MTOM) is 249 g*, in compliance with the C0 classification requirements under EU 2019/947 Regulation. When the drone is attached with the following approved accessories. The C0 certification can be identified by the C0 label attached to the drone.

Name	Model	Size	Weight
Antigravity A1 Propeller	CINSBANG	15.85 × 74.7 3 × 5.88 mm	0.95 g
Antigravity A1 Flight Battery	BDEmini-2360-7.16	50.8 × 27.2 × 89.6 mm	66.7 g
SD card	N/A	11 × 15 × 1 mm	0.3 g

The aircraft’s Maximum Take-Off Mass (MTOM) is 291 g*, in compliance with the C1 classification requirements under EU 2019/947 Regulation. When the drone is attached with the following approved accessories. The C1 certification can be identified by the C1 label attached to the drone.

Name	Model	Size	Weight
Antigravity A1 Propeller	CINSBANG	15.85 × 74.7 3 × 5.88 mm	0.95 g
AntigravityA1 High Capacity Flight Battery	BDEmax-4345-7.16	50.8 × 27.2 × 89.6 mm	108 g
SD card	N/A	11 × 15 × 1 mm	0.3 g

© 2025 Antigravity All Rights Reserved

Rotation Speed and Sound Level

Maximum Motor Rotation Speed	12,500 RPM
Sound Level	75 dB (A)
Maximum Vertical Speed at Landing	8 m/s (S mode)

Firmware Versions of RC Devices

Name	Model	Firmwares Version
Antigravity Vision Goggles	DGS001	2.7
Antigravity Grip Motion Controller	SRCSE001	2.7
Antigravity A1 Drone	DE001	4.9

App Versions of RC Devices

Name	Version	Compatibility
Antigravity App	1.0.0	iOS 17.0 / Android 10.0 or later
Unity App	1.0.0	iOS 17.0 / Android 10.0 or later

List of Replacement Parts

Antigravity Propellers

Antigravity Flight Battery

Antigravity High-Capacity Flight Battery

Remote Identification Protocol

Transmission protocol: Bluetooth LE. Note that the Remote ID broadcasting is only required for the aircraft with C1 certification.

Disposal of Used Parts



Observe the local regulations related to electronic devices when disposing of the drone, goggles and remote controller

Data Security and Privacy

Operator Registration

Upon the first use of the Antigravity App, the app will prompt the user to sign up for registration. Once the registration process is complete, the user can then proceed to access the full functionality of the A1 drone, including unlocking restricted access to the airspace.

Data Integrity Risk for Drone Users

Attention Drone Users: Please be aware that the integrity of your data, including flight logs and media files, is at risk of being compromised during upload and download operations. When transferring data between your drone and other devices, there is a possibility of unauthorized access, data corruption, or loss. To safeguard your data, ensure that secure transfer protocols are in place, and regularly back up important files to mitigate potential threats.

© 2025 Antigravity All Rights Reserved

Maintenance Instructions

To avoid serious injury to children and animals, observe the following rule: .

1. Store the Flight Battery and remote controller devices (i.e. Vision googles, Grip controller) in a cool, dry place away from sunlight. Recommended storage temperature range is 22°-28°C (71°-82°F) for over three months. Do not store outside 14°-113°F (-10°-45°C).
2. Keep the A1 drone dry. If the A1 drone comes into contact of water or liquid, dry with a soft cloth. Never use alcohol, benzene, or flammable substances to clean it. Avoid humid or dusty storage areas.
3. Only connect to USB version 3.0 or newer. Do not use “power USB” devices.
4. Inspect all parts after any crash. Contact an authorized dealer if needed.
5. Regularly check Battery Level Indicators of the Flight Battery. The design charging cycle for the battery is 300 cycles; do not use the battery beyond this limit.
6. Transport the A1 drone with all arms folded when powered off.
7. Fold all antennas of the Vision goggles during transportation.
8. Charge the battery to exit sleep mode after long-term storage.
9. Store all devices (including but limited to A1 drones, Vision googles and Grip controllers) in a dry environment. There is no altitude requirement for storage.
10. Remove the battery before servicing the A1 drone. Clean with a soft, dry cloth and avoid alcohol-based cleaners.
11. Turn off the battery before replacing or checking propellers.

FPV Operator Warning

While the operator is controlling the aircraft in FPV mode, it is essential to have a visual observer situated near the operator. The visual observer should be able to assist the operator in conducting the flight safely. Additionally, the visual observer must be able to communicate clearly with the operator.

GEO Awareness

Prerequisite:

Download the latest UGZ file from the EASA website (www.easa.europa.eu) and transfer the UGZ file to your mobile device.

Uploading UGZ:

Follow the instructions below to set up and refresh the UGZ database on the app.

1. Power on the aircraft, flight controller and the goggle. Ensure all devices are connected to each other.
2. Launch the app.
3. Go to “Settings > UGZ File Management”, tap “ Import” to start importing the UGZ file. Follow the on-screen instructions to complete the process. 4. When importing of the UGZ is complete successfully, you may see the prompt successful message on both the app and the goggle UI.

When UGZ Enabled:

Upon the aircraft approaching the restricted areas that are defined in the UGZ file, a warning message will prompt on the goggle to alert that user that the aircraft is about to entering the restricted area.

Remote ID

Follow the instructions below to upload the remote ID of the aircraft operator.

1. Power on the goggle and then launch the app. Ensure the goggle is connected to the Antigravity app.
2. Access to the “Setting” from the main menu of the app, then proceed to click on the “Binding Operator Remote ID”. Refer to the in-app prompts
3. Follow the on-screen instruction to complete the Remote ID registration. Upon the completion of Remote ID registration, the user’s ID will appear in the “Account Safety” section.

© 2025 Antigravity All Rights Reserved