AW526-LS

High Power 2-Way All Weather Loudspeaker with 1 x 15” LF

Professional Series



Key Features:

- Weather-Resistant, All Fiberglass Enclosure
- EN54-24 Compliant
- 120° x 60° Coverage
- 2265H Differential Drive® Low-Frequency Driver
- 2432H High Frequency Compression Driver
- Large PT™ Progressive Transition waveguide for excellent pattern control and low distortion
- Rotatable waveguide for vertical or horizontal orientation
- Available in Gray and Black finish
- 500W, 70/100V Transformer Included
- U-type Mounting Bracket Included

Applications:

- Sports Facilities
- Themed Entertainment Venues
- Outdoor Entertainment Centers
- Cruise Ships
- Water Parks

The AW526-LS is a high power, lightweight, 2-way, full-range loudspeaker system comprised of the JBL Differential Drive dual voice coil and dual magnetic gap 2265H 380 mm (15 in) low-frequency driver and 2432H high-frequency 38 mm (1.5 in) exit, 75 mm (3 in) voice-coil compression driver. The large format Progressive Transition wave-guide provides excellent 120° x 60° coverage. The waveguide is rotatable so the loudspeaker system can used in either the vertical or horizontal orientation. The system can be operated as an 8- ohm device and is equipped with a 500W transformer for 70/100V applications.

A corrosion-resistant extra-thick zincplated polyester powder coated U-type mounting bracket is included.

The enclosure is constructed of multilayer glass composite and is heavily braced to maximize lowfrequency performance. The 16-gauge stainless steel grille, backed with open cell foam and stainless steel mesh, provides excellent protection in the harshest environments.

The AW526-LS is part of JBL’s AE Series, a versatile family of loudspeakers intended for a wide variety of applications.

Specifications:

System:				
Frequency Range (-10 dB):	39 Hz – 20 kHz			
Frequency Response (±3 dB):	86 Hz – 17 kHz			
Coverage Pattern:	120° x 60°, rotatable waveguide			
Coverage Angle:	500 Hz	1000 Hz	2000 Hz	4000 Hz
Horizontal:	135°	98°	115°	108°
Vertical:	108°	95°	67°	46°
Directivity Factor (Q):	7.9			
Directivity Index (DI):	9 dB			
Crossover Frequency:	1.1 kHz			
Long-Term System Power Rating (IEC)[1]:	400 W (16000 W peak), 100 hrs.			
Maximum SPL[2]:	127 dB-SPL cont avg (133 dB peak)			
Maximum SPL (@ 4m):	108 dB per EN54 Standard			
System Sensitivity (1W @ 1m)[3]:	100 dB			
Sensitivity (1W @ 4m):	86.98 dB SPL			
70V / 100V Transformer Taps[4]:	70V: 500W, 250W, 125W (Nominal Impedance: 10 ohms, 20 ohms, 40 ohms) 100V: 500W, 250W (Nominal Impedance: 20 ohms, 40 ohms)			
Transducers:				
Low Frequency Driver:	1 x JBL 2265H 380 mm (15 in.) Differential Drive® driver with 75 mm (3 in) dual voice coil			
Nominal Impedance:	8 ohms (6.2 Ohms per EN54)			
Sensitivity[3] (1W @ 1m, within operational band):	98 dB SPL			
High Frequency Driver:	JBL 2432H, 38 mm (1.5 in) exit compression driver, 75 mm (3 in) voice coil			
Nominal Impedance:	8 ohms (6.2 Ohms per EN54)			
Sensitivity[6] (1W @ 1m):	113 dB SPL			
Waveguide:	PT-H126HF -1			
Physical:				
Enclosure:	Hand-Laminated Fiberglass, gray gelcoat (similar to Pantone 420C), available in black (-BK)			
Suspension Attachment:	2 x M10 for Included U-Bracket, 2 x M6 for aiming stabilization, 1 x M10 on rear for safety.			
Grille:	Three layer grille assemblies consisting of 16-gauge powder coated stainless steel, backed with open cell foam and stainless steel mesh.			
Input Connection:	CE-compliant covered barrier strip terminals. Barrier terminals accept up to 5.2 sq mm (10 AWG) wire or max width 9 mm (.375 in) spade lugs.			
Environmental Specifications:	IP55C per IEC 529			
Dimensions (H x W x D in horizontal cabinet orientation):	485 x 810 x 478 mm (19.1 x 31.9 x 18.8 in)			
Net Weight:	28.3 kg (62.5 lb)			

[1]IEC standard, full bandwidth pink noise with 6 dB crest factor, 100 hours.
[2]Calculated based on power rating and sensitivity, exclusive of power compression.
[3]Anechoic sensitivity in free field, no additional sensitivity gain from boundary loading.
[4]Per EN54-24 Components of voice alarm system - loudspeakers 70V/500W (35V RMS, 70V peak), 100V/500W (50V RMS, 100V peak)

JBL continually engages in research related to product improvement. Changes introduced into existing products without notice are an expression of that philosophy.

Beamwidth

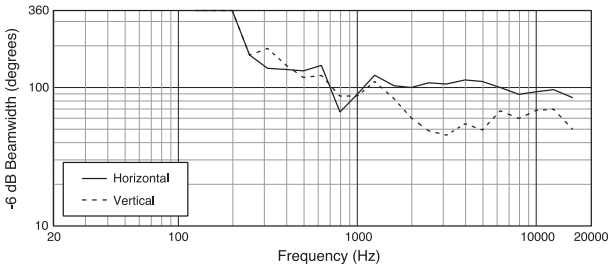

Frequency Response and Impedance

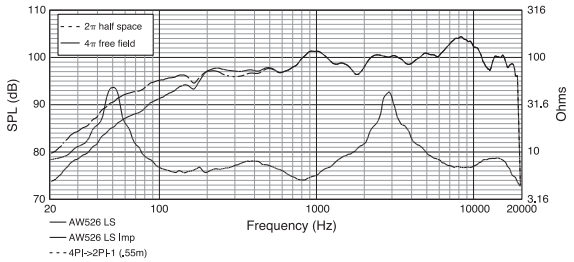

Horizontal Off-Axis Frequency Response Right

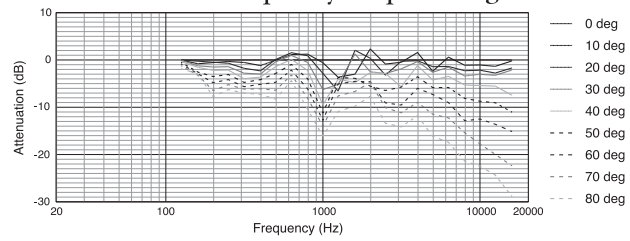

Vertical Up Off-Axis Frequency Response

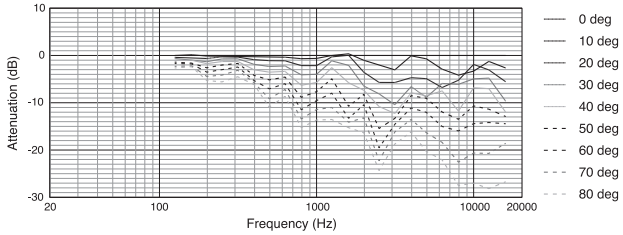

Horizontal Off-Axis Frequency Response Left

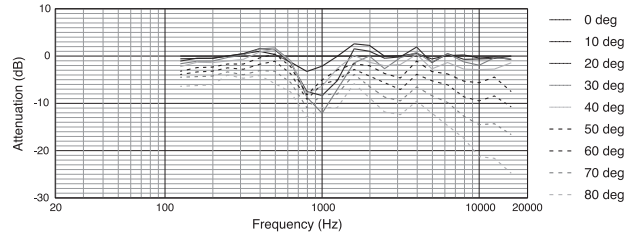

Vertical Down Off-Axis Frequency Response

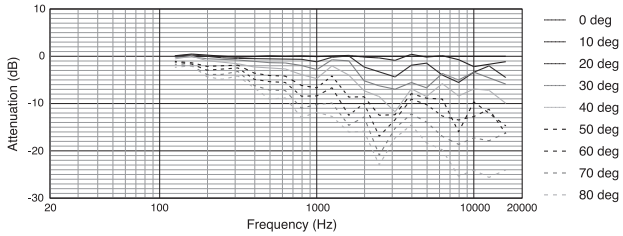

Directivity Index, Q

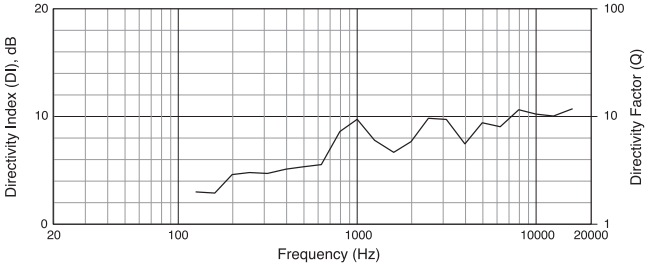

Measurements obtained in full passive crossover mode with no signal processing. Graphs are from unaltered measured data.

Dimensions

Dimensions in mm (in)

For more detailed dimensional information, refer to Application Data Sheet

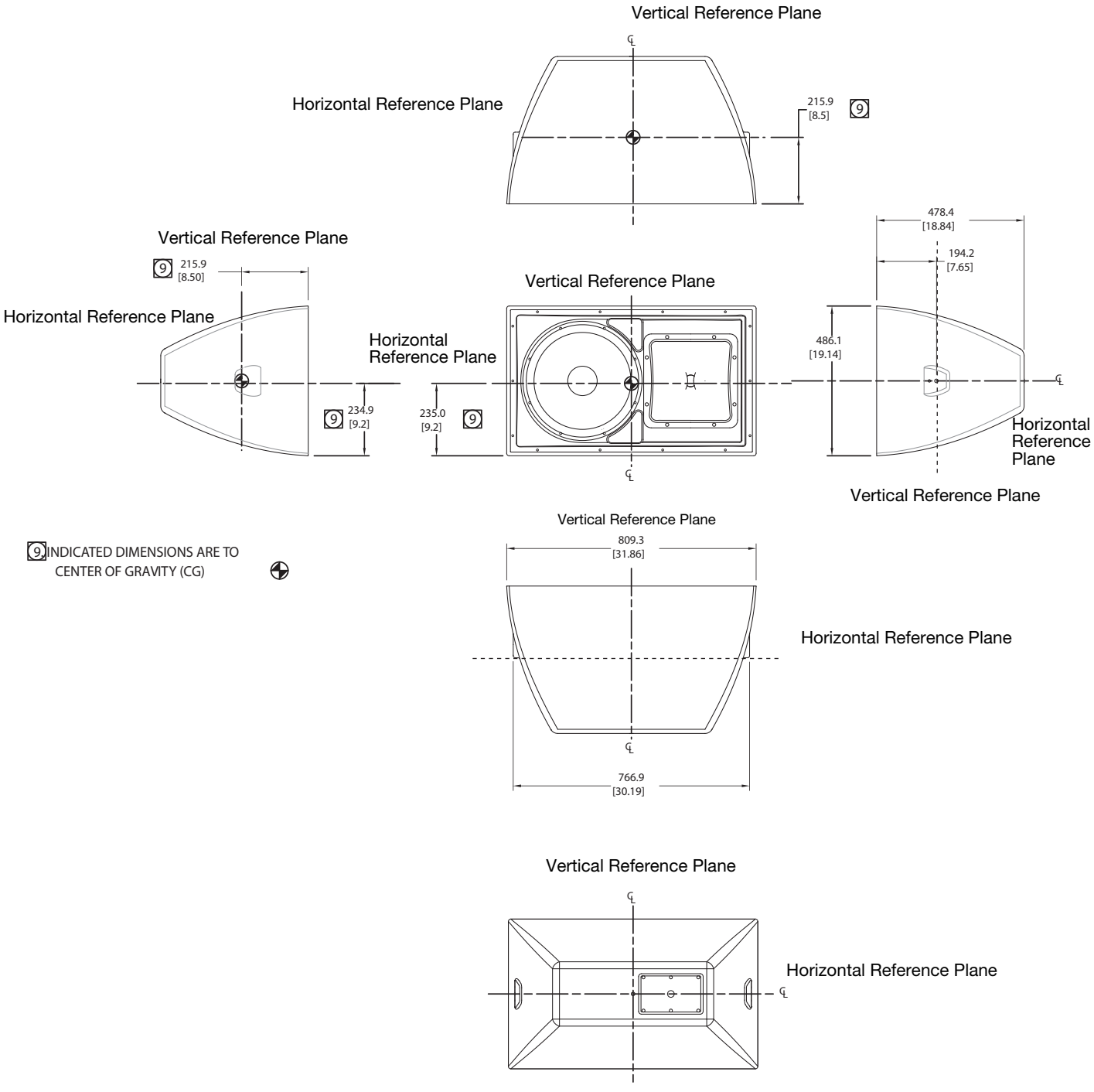

Horizontal 1/3 Octave Polars

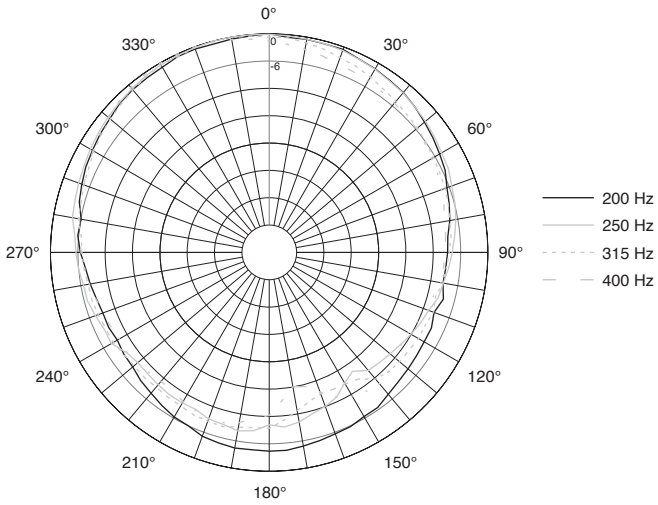

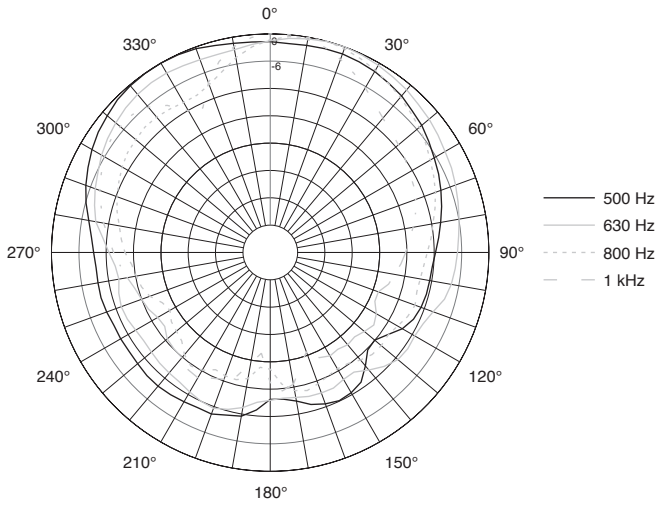

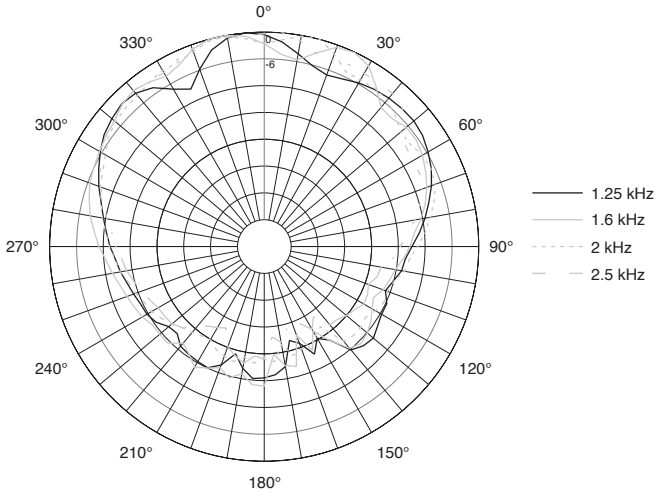

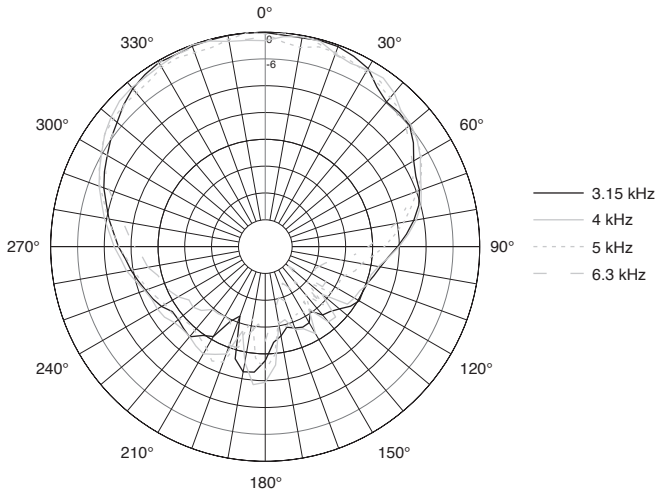

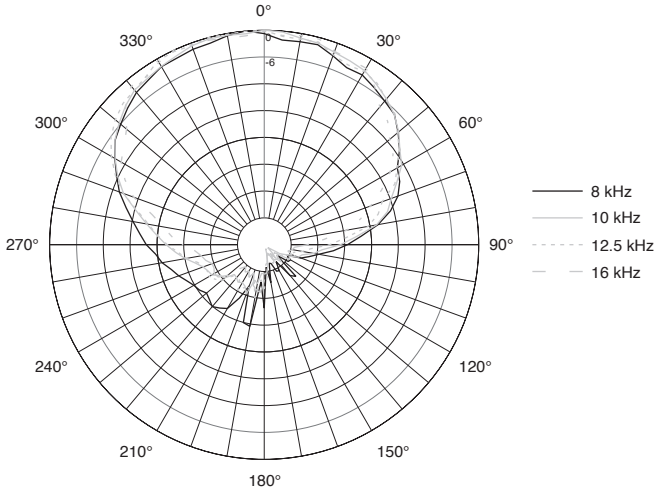

One-Third Octave Contributions to Frequency Response (per EN54-24)

Frequency (Hz)	Sound Level Measured (dB)
500	74
630	75
800	75
1000	76
1250	73
1600	71
2000	73
2500	77
3150	77
4000	74

Vertical 1/3 Octave Polars

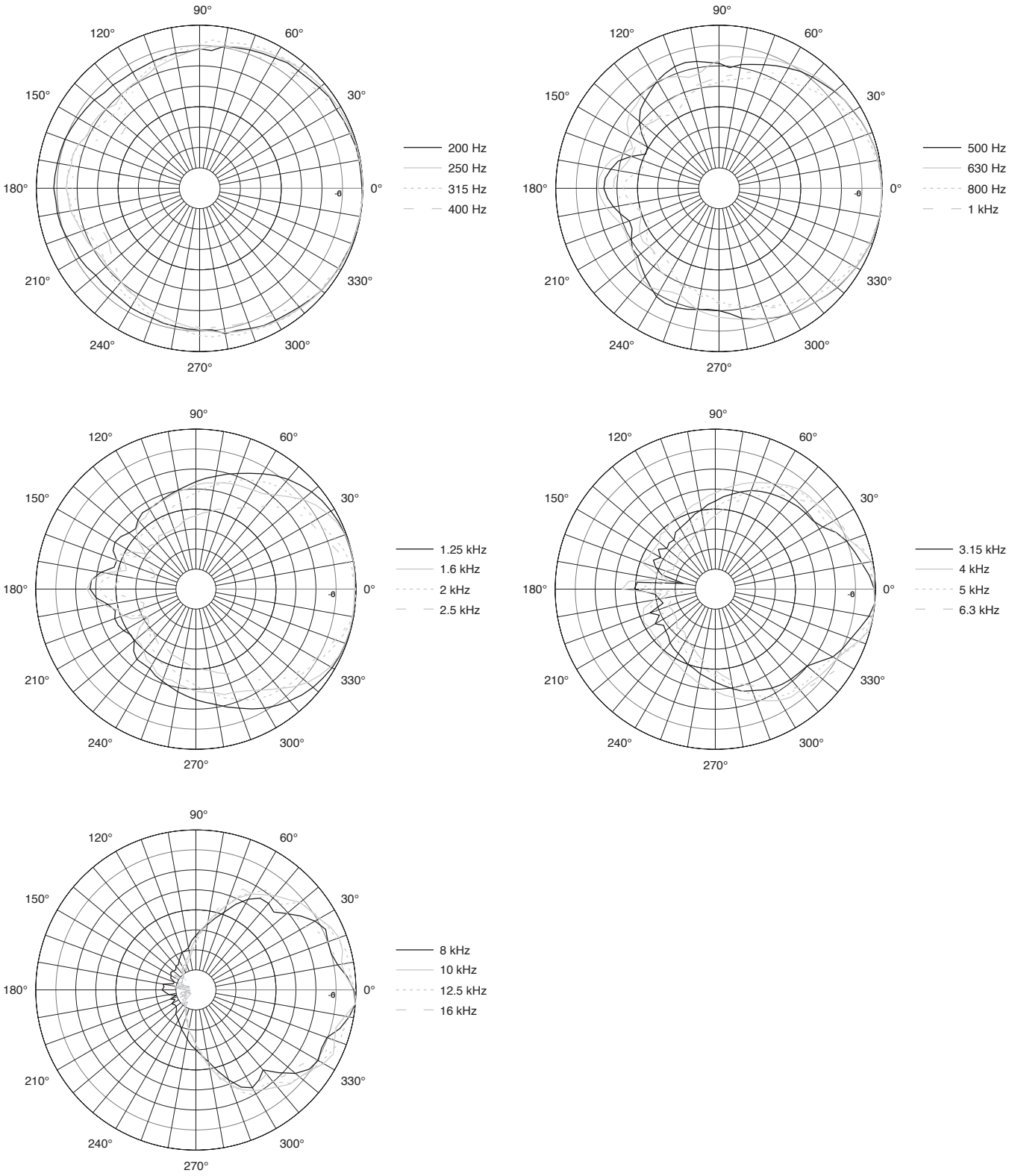

JBL Professional
8500 Balboa Boulevard, P.O. Box 2200
Northridge, California 91329 U.S.A.
© Copyright 2024 JBL Professional
www.jblpro.com

5037949
SS AW526-LS
CRP
08/2024