Marshall

Broadcast A/V Division

CV625-TB/TW/TBN/TWN

25X AI Tracking and Flow PTZ Camera



User Manual

Marshall

Table of Contents

CHAPTER 1: PACKAGE CONTENTS 1

CHAPTER 2: PRODUCT APPEARANCE 2

2.1 I/O Interface 3

2.2 LED Indicator 3

2.3 Tally Lamp 3

CHAPTER 3: INSTALLATION INSTRUCTIONS 3

3.1 Scenario 3

3.2 Instruction for Installation 3

3.3 Connection 6

CHAPTER 4: REMOTE CONTROL AND SETTING MENU 7

4.1 Remote Control 7

4.2 Setting Menu 8

CHAPTER 5: NETWORK SETTING AND WEB INTERFACE 12

5.1 Connecting Camera to Network 12

5.2 Web Interface Functions 14

CHAPTER 6: TROUBLESHOOTING 31

CHAPTER 7: ADDENDUM 32

CHAPTER 8: SAFETY INSTRUCTIONS 36

COPYRIGHT INFORMATION 38

Chapter 1: Package Contents

Camera



Power Adapter

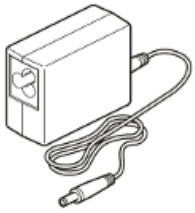

Power Cord

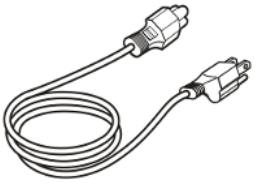

Appearance may vary depending on country/ region

USB 3.0 Cable-2m

(Type B - Type A)



Remote Control



Metal Plates A & B

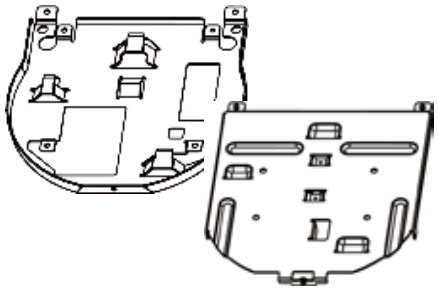

Y-ADP-RS232

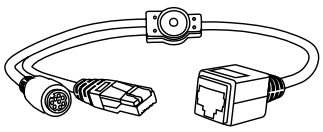

M3 Screws

Silver x8/ Black x2



Chapter 2: Product Appearance

2.1: I/O Interface

Front

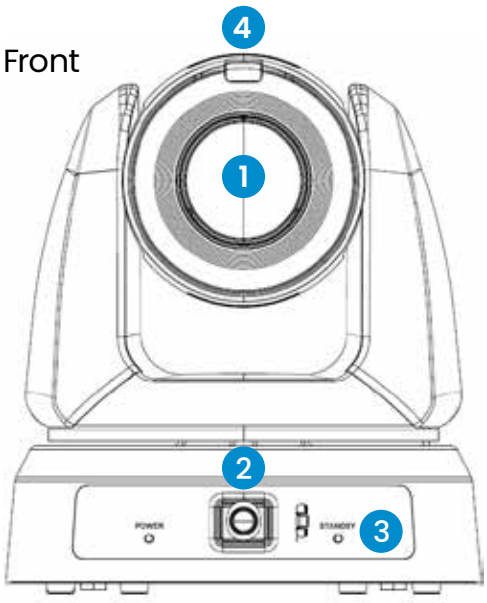

Back

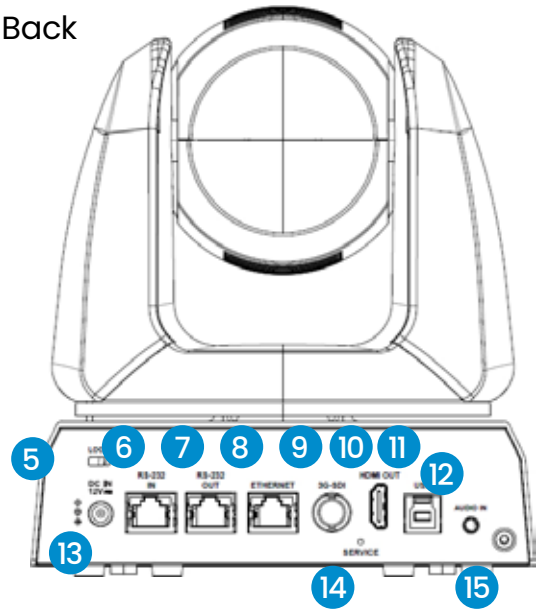

NO.	Item	Function Description
1.	Main Camera Lens	PTZ camera lens
2.	Panoramic Lens	Panoramic camera lens Note When the camera is installed at a height above 2 **meters**, we recommend adjusting the tilt position. Refer to **3.2.5 Tilting the Panoramic Lens**
3.	LED Indicators	Displaying the status of the camera, refer to **2.2 LED Indicator**
4.	Tally Lamp	Displays the Tally Lamp status of the camera
5.	Lock	Safety lock slot
6.	RS232 **IN**	RS-232 port, up to 7 cameras can be connected. Pin out please refer to **3.3.2 RS-232 Pin Definition**
7.	RS232 **OUT**	
8.	Ethernet	Network port, with PoE+ (IEEE802.3at) support
9.	3G-SDI	3G-SDI output (BNC 75Ω / supports SMPTE 425M)
10.	HDMI **OUT**	Video output
11.	USB3.0	Connect to the computer's USB port; delivers USB video
12.	Audio In	3.5mm Line in
13.	DC IN 12V	DC supply connecting port
14.	Service	Safety lock slot
15.	Lock	Safety lock slot

2.1: LED Indicator

Status	Power	Standby
Power not connected	No Light	No Light
Startup in progress (Initialization)	Green	Orange
Power **ON** (In use)	Green	No Light
Standby	No light	Orange
Tracking / Framing Mode	Green Flickering	Green Flickering
Privacy Mode	Orange	No Light

2.1: Tally Lamp

The Tally lamp function can be enabled by an RS-232 command. Please refer to the RS-232 command set document

Chapter 3: Installation Instructions

3.1: Scenario

CV625-TB/TW/TBN/TWN/TBN/TWN supports a tracking range of 2-18m

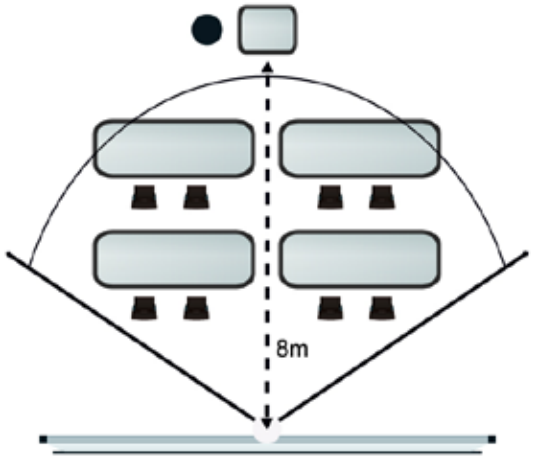

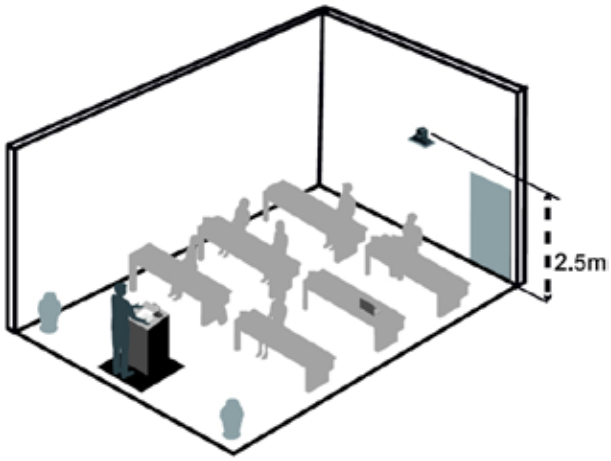

3.2: Installation Instructions

PTZ installation and connection requires special skills. It is important to securely install the device. Pay attention to your safety and to the safety of those around you during the installation. Ensure the safety of the installation environment. Do not install the device to an unstable ceiling or at a height that may risk injury to people below.

3.2.1 Please ensure installation safety, please do not mount the device on an unstable ceiling or in any location where it may fall, as this could lead to accidents.

3.2.2 Please check that accessories in the box are complete. Please contact the supplier about any shortage, and make sure to keep the accessories in the box.

3.2.3 Please choose an appropriate location for installation of camera in advance.
Please determine the installation site according to the following requirements:

(A) Confirm the position for the object to be captured.

(B) Confirm whether the camera is set at a proper distance from light sources

3.2.4 Handling Instructions

- Do not hold the camera by its pan/tilt head.
- Do not manually rotate the camera head. Improper rotation may result in damage.

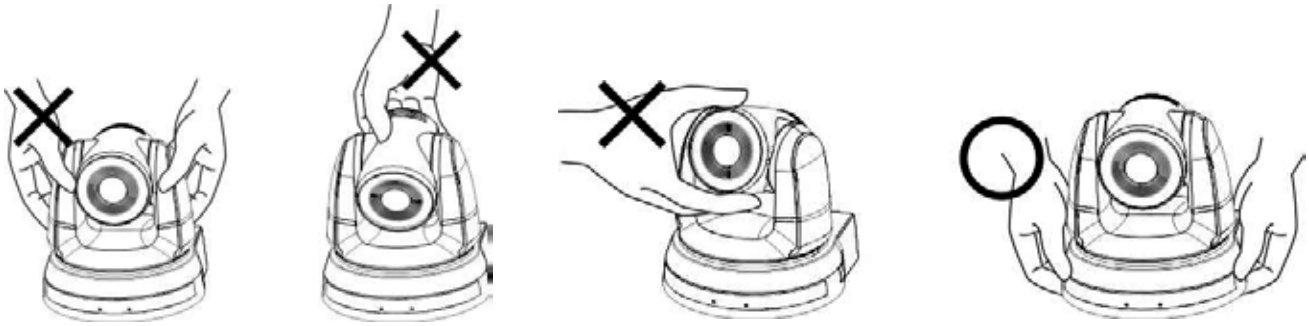

- Before installation, confirm the camera orientation relative to the object to be captured. It is recommended that the camera should be set at more than 1.5 meters from the object to be captured. Adjust the position to achieve your required shooting angle.

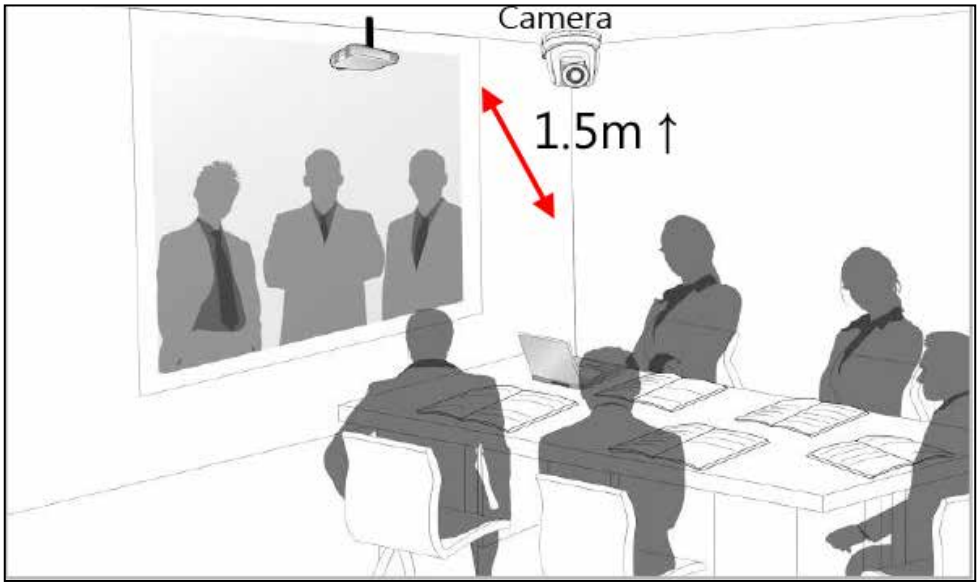

- The Camera (including metal plates) weighs approximately 2.7 kg. For ceiling mountain, use a hanger that has obtained UL security approval to prevent the unit from falling.

- Regularly check the stability and strength of the camera installation.

3.2.5 Tilting the Panoramic Lens

The panoramic lens supports three tilt positions: **Up** / **Normal** / **Down**

- When the camera is installed at a height above 2 meters, it is recommended to adjust the angle of the lens.
- Upright Installation: Adjust to the [Down] position.
- Inverted Installation: Adjust to the [Up] position.
- After adjusting the tilt angle, please go to [Tracking]> [Lens Tilt Direction] and select the corresponding value in the web interface.

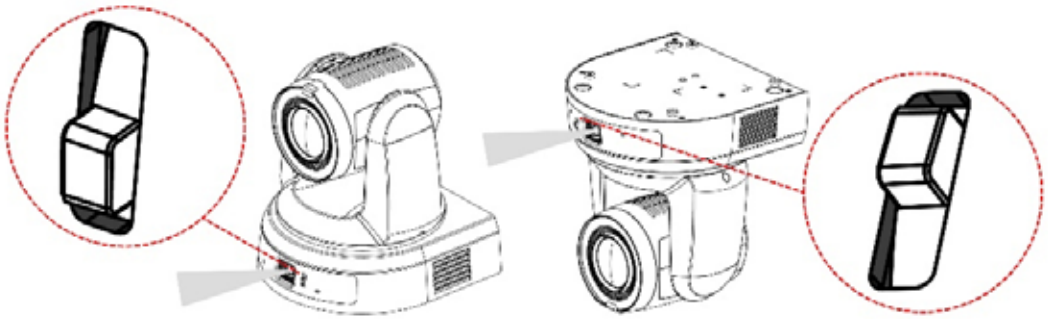

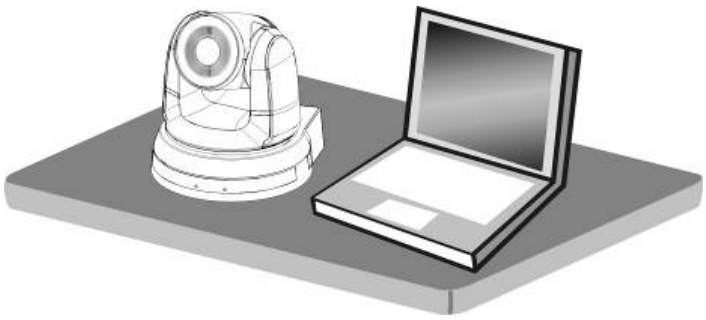

3.2.6 Installing the camera on the desk

Place the camera on a flat desk to ensure normal operation.

3.2.7 Mounting the camera to the ceiling

(A) Prepare the following items:

- Accessories in the box (metal plates A, B, M3 screw silver x 8, black x 2)
- 4x screws for locking the ceiling mounted hanger
- Drilling, screwdriver and ladder
- For dimensions of the camera and metal plates, please refer to **Chapter 7**

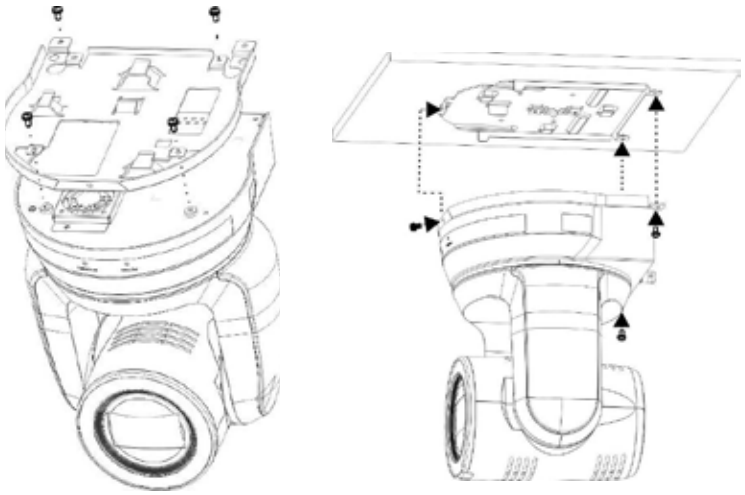

Addendum

(A) Installation Steps

1. Fix the **Metal Plate A** to the camera base with:
2. 4x M3 silver screws
3. Lock the **Metal Plate B** on ceiling mounted hanger

! Caution:

- Please use a hanger that has obtained UL security approval.
- Please ensure space for cable access.

3.2.8 How to Remove

1. Remove the connecting cables from the camera
2. Loosen the three screws that fix the metal plates **A** and **B** by pushing to the left to remove the camera
3. Remove the three screws

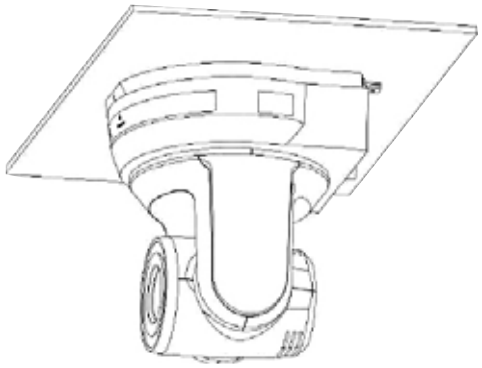

3.3: Connection

3.3.1 Connecting devices

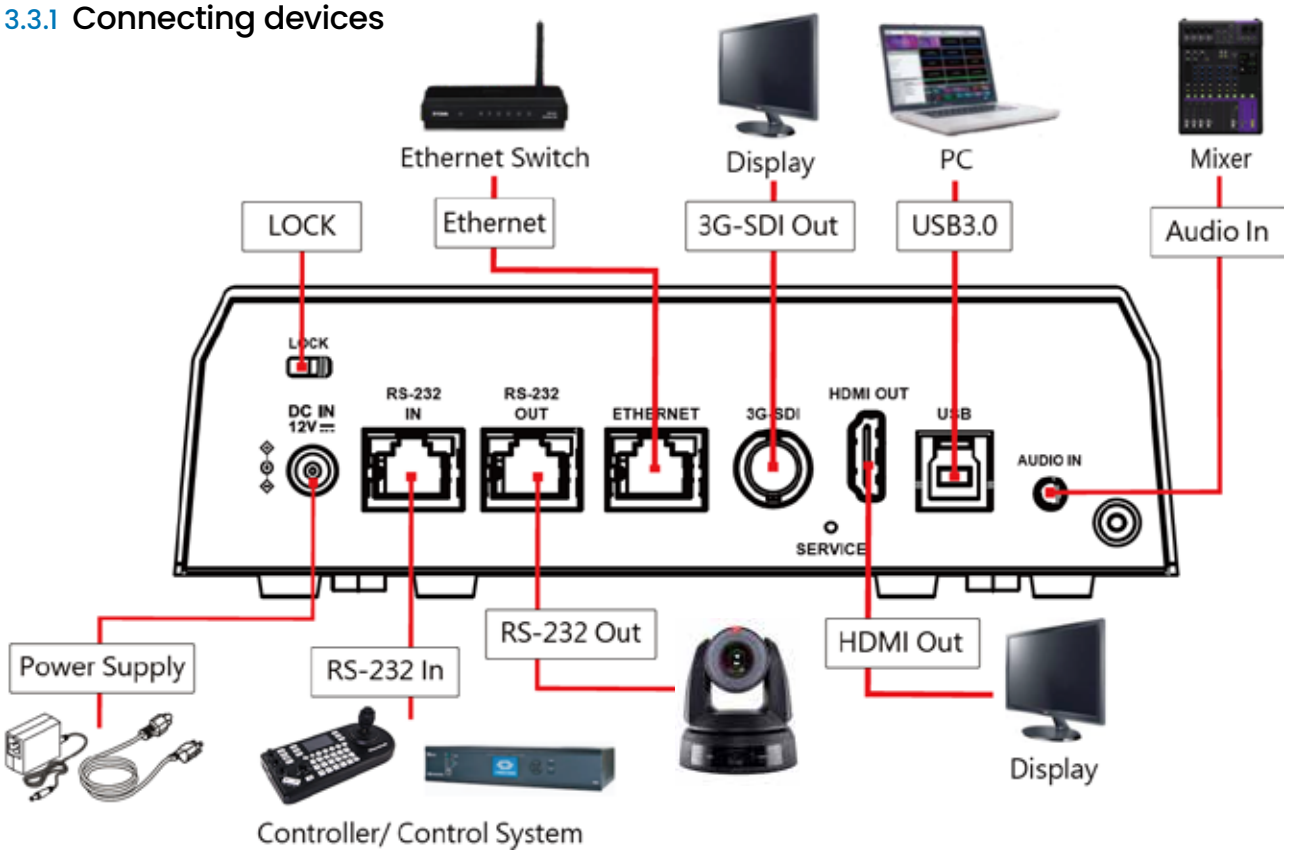

NOTE: Ethernet port supports PoE+ (IEEE802.3at)

3.3.2 RS-232 Pin Definition

NOTE: Daisy Chain for up to 7 connected cameras

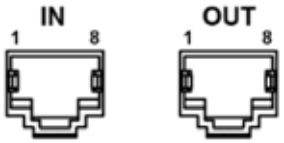

Pin No.	IN	OUT
1	NA	NA
2	NA	NA
3	GND	GND
4	TX	RX
5	RX	TX
6	DTR	DSR
7	NA	NA
8	NA	NA

Chapter 4: Remote Control & Setting Menu

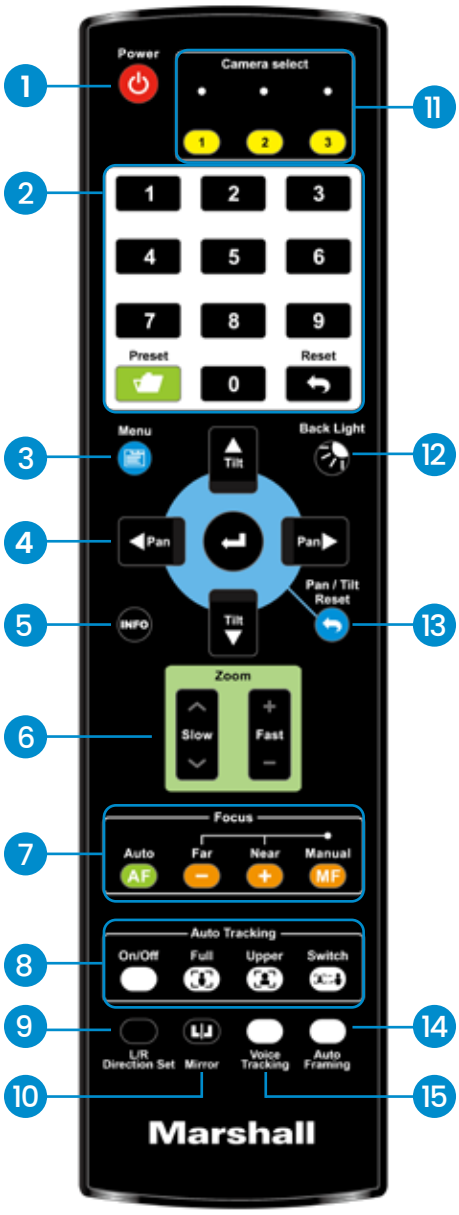

No.	Item	Description
1.	Power	Power on / off
2.	Preset	■ 0-9: Click to call the preset ■ Preset: Assign a preset number (0-9) to save the current position ■ Reset: Select a preset number (0-9) to clear its position
3.	Menu	Display OSD menu
4.	Pan/ Tilt/ Enter	■ Pan / Tilt: Move the camera head ■ Home / Enter: Go back to Home position / Execute
5.	Info	Status information
6.	Zoom	■ Fast: high speed zoom / ■Slow: low speed zoom
7.	Focus	■ Auto: Auto focus ■ Manual: Enable Manual Focus ■ Far/ Near: Adjust the focus in Manual mode
8.	Auto Tracking	■ On/Off: Enable/Disable Auto Tracking ■ Full: Frames presenter's full body ■ Upper: Frames presenter's torso ■ Switch: Switch target to a different presenter
9.	L/R Direction Set	L/R Direction / Normal
10.	Mirror	Rotate the image (OFF / Mirror / Flip / Rotate)
11.	Camera select	Choose Camera ID 1 - 3
12.	Back Light	Turn on/off back light compensation
13.	Pan/Tilt Reset	Clear the Pan/Tilt setting
14.	Auto Framing (or ON/ OFF)	Enable/ Disable Auto framing ※Please refer to Note 1 for details.
15.	Voice Tracking (or Trigger)	VC-TR61/ VC-TR61N not supported ※Please refer to Note 1 for details.

New version



Previous version

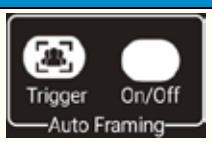

***Note 1: The labeling of buttons #14/ #15 may vary depending on the remote control version. Please refer to the image on the left for details.**
(The labeling differs, but the functions are the same.)
#14 Auto Framing = Auto Framing On/Off

#15 [Voice Tracking] or [Trigger]:

- When used with a camera that supports voice tracking: on/ off the voice tracking function.
- When used with a camera that does not support voice tracking:
- **Single-lens:** Auto framing will reset to wide angle and reframe automatically.
- **Dual-lens:** No corresponding action. Dual-lens cameras feature a built-in wide-angle lens for improved framing, eliminating the need for manual calibration.

4.2: Setting Menu

Press [MENU] on the remote control to call the on-screen menu. Default is indicated in bold

Layer 1	Layer 2	Layer 3	Description
Exposure	Mode	**Full Auto**/ Shutter Priority/ Iris Priority/ Manual/ White Board	Exposure mode setting
	Exposure Comp	On/ **Off**	Turn on/off Exposure Compensation
	Exposure Comp. Level	-6-**C**-4	Adjustable after **Exposure Comp.** s activated
	Spot Light	On/ **Off**	Turn on/ off Spot Light
	Spot Light Position	X(0-6)Y(0-4)	Adjustable after **Spot Light** is activated
	Gain Limit	8-**30**dB	Max. limit value of electron gain
	WDR	**Off**/ 1/ 2/ 3	WDR settings
	Anti-Flicker	50Hz/ 60Hz/ **Off**	Activate the anti-flicker function to eliminate flicker from lighting.
	Shutter Speed	1/10000-1/25	Adjustable when the **Exposure mode** is set to **Shutter Priority** or **Manual**
	Iris Level	F1.8-**C**-F11/ Off	Adjustable when the **Exposure mode** is set to **IRIS Priority** or **Manual**
	Gain Level	**0**~45dB	Adjustable when the **Exposure mode** is set to **Manual**
White Balance	Mode	**1.Auto** 2.Indoor 3.Outdoor 4.One Push WB 5.ATW 6.Manual 7.Sodium Lamp	Select the color temperature 1. 4000k - 7000k 2. 3200k 3. 5800k 4. 1700k - 10000k 5. 1700k - 10000k 6. Manual 7. 2800k
	One Push Trigger	**ENTER**	One push trigger
	Manual Red	0-**C**-128	Adjustable when the white balance mode is set to **Manual**
	Manual Blue	0-**C**-128	Adjustable when the white balance mode is set to **Manual**
Tracking	Type	**Auto Tracking**/ Auto Framing	

Layer 1	Layer 2	Layer 3	Description
Picture	3D NR	Off / Low/ **Typ**/ Max	3D noise reduction
	Image Mode	**Default**/ Custom	Users can customize the selected image mode
	Gamma	0-**C**-3	Adjustable when **Image Mode** set to **Custom**
	Brightness	0-**C**-25	Adjustable when **Image Mode** set to **Custom**
	Contrast	0-**C**-25	Adjustable when **Image Mode** set to **Custom**
	Saturation	0-**C**-25	Adjustable when **Image Mode** set to **Custom**
	Sharpness	0-**C**-11	
Pan Tilt Zoom	Pan/Tilt Limit	On/ **Off**	On/ Off Set angle limit
	Pan Right Limit	0-**170**	Limit the panning angle (right side)
	Pan Left Limit	**-170**-0	Limit the panning angle (left side)
	Tilt UP Limit	0-**90**	Limit the tilt angle (up)
	Tilt Down Limit	**-30**-0	Limit the tilt angle (down)
	Pan Flip	On/ **Off**	Reverses the Pan direction
	Tilt Flip	On/ **Off**	Reverses the Tilt direction
	Preset Speed	5/ 25/ 50/ 80/ **120** deg/sec	Set the robotic and zoom speed of the camera
	PTZ Speed Comp	On/ **Off**	Enable the zoom speed independent from the robotic speed
	D-Zoom Mode	**On**/ Off	Set the digital zoom limit
	Limit	**2x**-8x	Note Digital zoom is not supported with: ■ 4K resolution ■ 1080P/ 720P, Stream/ UVC outputs
D-Effect	Mirror	**Off**/ Mirror/ Flip/ Mirror+Flip	Activate image rotation and/or mirroring
Auto Focus	AF Sensitivity	Low/ **Middle**/ High	Changes the sensitivity of the auto-focus

Layer 1	Layer 2	Layer 3	Description
	AF Frame	Center Area/ **All Area**	Changes the focusing zone to the selected mode ■ Central area: focusing will be performed based on the center ■ Full Frame: focusing will be calculated based on the full screen
	Zoom tracking	On/ **Off**	Focus mode during lens zooming (It can be set to Manual Focus (MF) mode)
	PTZ Assist	On/ **Off**	Available when Focus is in Manual Mode Note PTZ Assist is triggered only when the camera has moved in any axis. It will not dynamically respond to changes in the scene.
Ethernet	DHCP	**On**/ Off	Enable/Disable dynamic host configuration
	IP Address	**192.168.100.100**	Configurable when DHCP is set to Off
	Subnet mask	**255.255.255.0**	
	Gateway	**192.168.100.254**	
Audio	Audio In	**Line In**	3.5m Line In
	Audio Enable	On/ **Off**	Turn on/off audio output
	Audio Volume	0-**C**-10	Volume Setting
	Audio Delay	On/ **Off**	When the audio is not synchronized with the video, enable this function to set an audio delay time
	Audio Delay Time(ms)	**-10**~-500ms	Set audio delay time
	Encode Sample Rate	48 (AAC)	Set the encode type and sample rate
System	Prompt	On/ **Off**	Turn on/off the prompt information on the display
	IR Receive	**On**/ Off	Turn On/off the infrared reception. When off, the remote control will not be able to control the camera. Re-start the camera to re-activate.
	IR Select	**1**/ 2/ 3	Pair the remote controller with the camera.

Layer 1	Layer 2	Layer 3	Description
	Tally Lamp	On/ **Off**	Enables the camera's tally lamp.
	Tally CMMD Mode	Normal/ **Link**	Set whether the tally lamp is linked with RS232 commands. ■ Normal (Not linked): The tally lamp and mode are set separately. ■ When the tally lamp is on but the default mode is off, an additional command is required to set the indicator light mode ■ When the tally lamp is off, setting the mode will not trigger the indicator light ■ Link: ■ When the tally lamp is on, the default mode is a red light ■ When the tally lamp is off, setting the mode will turn on the tally lamp.
	Tracking Led Status	On/ **Off**	When enabled, LED on the front panel will flash green while the camera is tracking.
	Language	**English**	
	Initial Position	**Last MEM**/ 1st Preset	After turning on the camera, you can select the lens to be returned to **Last MEM** or **1st Preset** Note **1st Preset** =Preset 0
	Motionless Preset	On/ **Off**	The image will freeze when **Preset** is executed. Freeze will be released after the **Preset** move is completed
	Privacy Mode	On/ **Off**	When the camera is turned off via the remote control or software, the lens will automatically turn to the bottom right to ensure the user's privacy
	Protocol	**VISCA**	Supports VISCA protocol
	Baud Rate	**9600**/38400	Transmission speed of the control signal
	VISCA Address	**0**-7	The camera ID address can be manually assigned.

Layer 1	Layer 2	Layer 3	Description
	Output Mode	2160P 59.94/50/29.97/25 1080p 59.94/50/29.97/25 720p 59.94/50/29.97/25 1080i 59.94/50	Set the output resolution (1080i is only available via HDMI. If selected, SDI will still output 1080p)
	Factory Reset	On/ Off	Engage factory default settings
Status			Display the current settings information

Chapter 5: Network Setting & Web Interface

5.1 Connecting Camera to Network

5.1.1 Connection

Two common connection methods are shown below

1. Connect via switch or router



2. Connect directly via an Ethernet cable. The computer's IP address must match the network segment used by the camera.

E.g. The camera's default IP address is 192.168.100.100. The computer's IP address should be set to the same segment, such as 192.168.100.101.

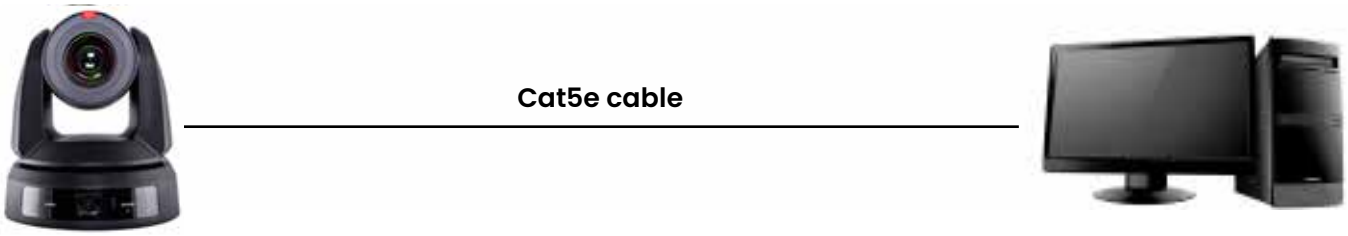

■ Modify the PC's network settings

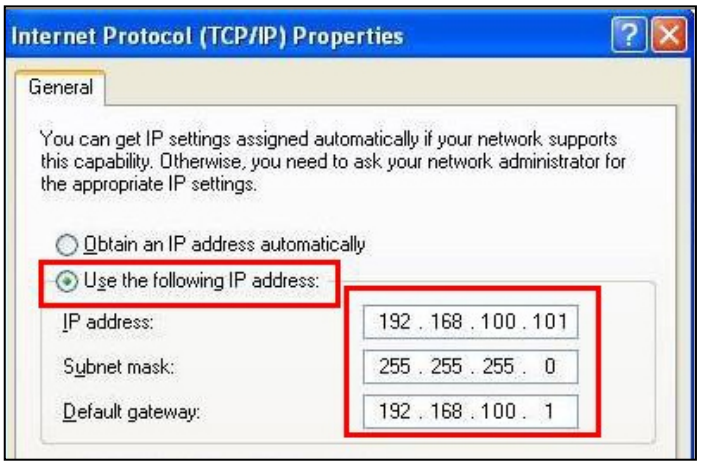

5.1.2 Use a Browser to view Images

- Open the browser, and enter the IP address of the camera in the address bar

  E.g.: http://192.168.100.100 (default IP address)

- Enter the Username and Password

NOTE: Please refer to 5.2.12 System-User to change the default password.



Marshall IP Camera
- Account: admin
- Password: 9999

5.1.3 Use an RTSP Player to View Live Images

Free software can be used for RTSP connection, such as VLC, Quick Time or PotPlayer.
RTSP connection address formats are as follows:

- RTSP Stream 1 => rtsp://camera IP:8554/hevc
  rtsp://camera IP:8557/h264
- RTSP Stream 2 => rtsp://camera IP:8556/h264
- Panoramic Camera Output => rtsp://camera IP:8553/h264

If password authentication is enabled, the RTSP connection address is as follows:

- rtsp://Username: Password@VC IP address:8557/stream1(or stream2)
- To enable password authentication function, please refer to **5.2.10 System-Network**

Example: Open the VLC software, click [Open Network Streaming], and enter the URL:
rtsp://192.168.100.150:8557/h264

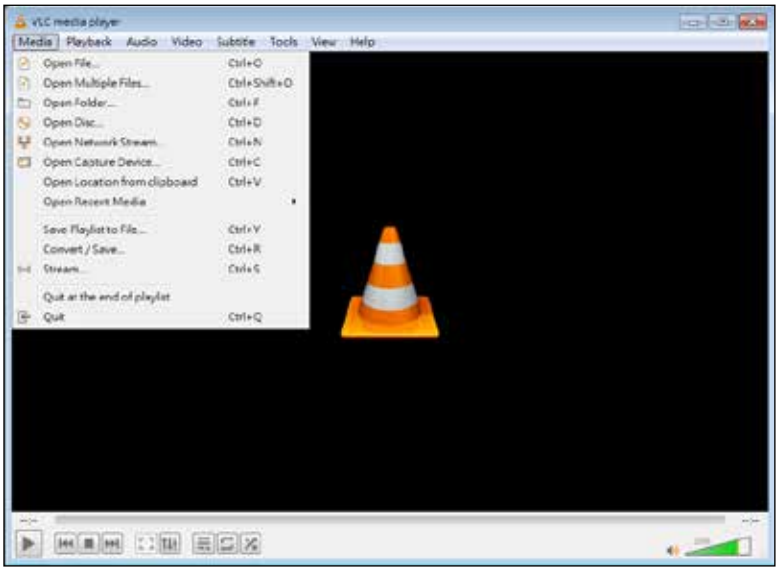

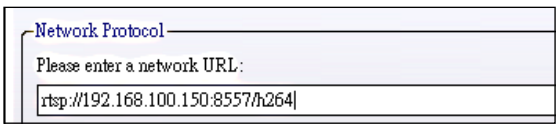

5.2 Web interface functions

5.2.1 Log in



No	Item	Function Descriptions
1	User name	Enter user login credentials (default: admin)
2	Password	Enter user password (default: 9999) Note Please refer to 5.2.12 System-User to change the default password
3	Remember Me	Save the user name and password. When you log in next time, there is no need to re-enter them
4	Login	Log into the web interface

5.2.2 Live View

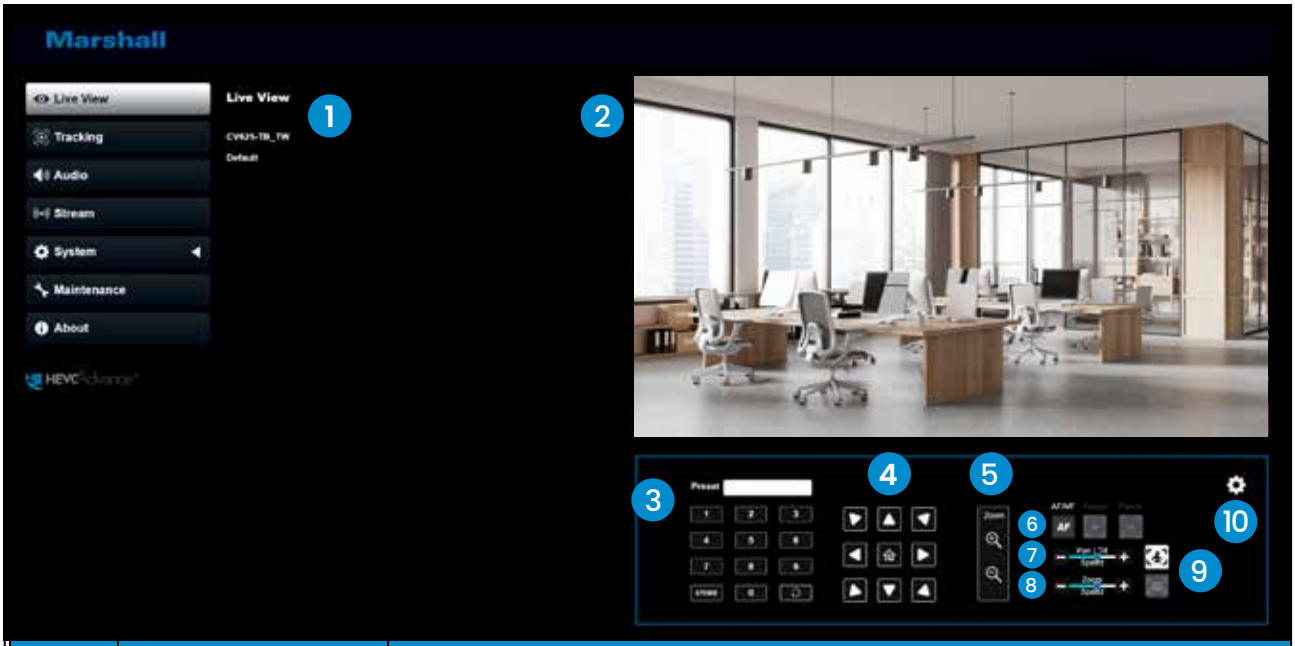

No	Item	Function Descriptions
1	Camera ID/ Location	Display camera ID/ Location Please refer to **5.2.8 System-Device**
2	Preview screen	Display the live view of the camera
3	Preset setting	Select the number first and then select Store or Load
4	Pan/Tilt	Adjust the Pan/Tilt position of the camera
5	Zoom	Zoom In/Zoom Out
6	AF/ MF	Switch Auto Focus/ Manual Focus.
7	Pan/ Tilt Speed	Adjust the pan/ tilt speed
8	Zoom speed	Adjust the zoom speed
9	Tracking	Enable/ Disable Auto Tracking/ Auto Framing Note Select Auto Tracking or Auto Framing
10	Camera Setting	Please refer to **5.2.3 Live View - Camera Setting** for related settings

5.2.3 Live View - Camera Setting

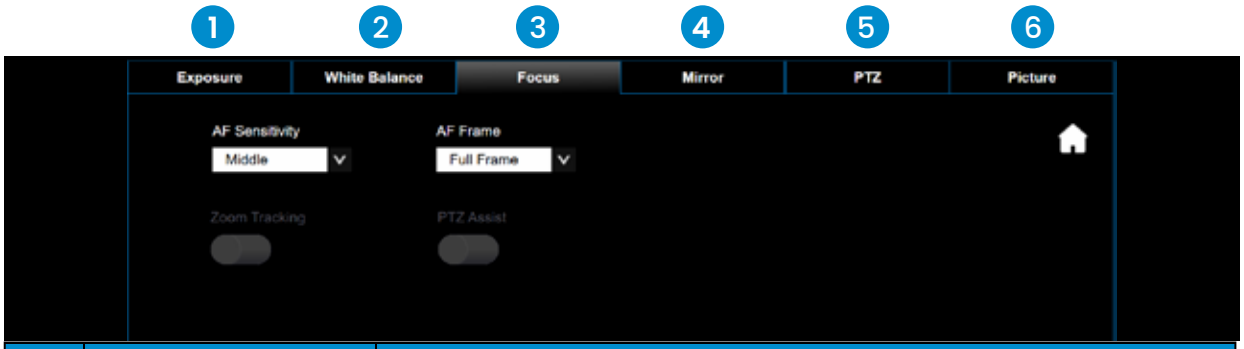

No	Item	Descriptions
1.	Exposure	■ Mode: Exposure mode (Full Auto/ Shutter Pri/ Iris Pri/ Manual/ White Board) ■ WDR: set the level to change the dynamic range of the picture ■ Exposure Comp. Level: select exposure compensation level ■ Gain Level: adjust gain level (adjustable under "Manual" mode.) ■ Iris Level: adjust the aperture (adjustable under "Manual" or "Iris Priority" mode) ■ Shutter Speed: adjust the shutter speed (adjustable under "Manual" or "Shutter Priority" mode) ■ Anti-Flicker: Activate to eliminate flicker from lighting ■ HDR: Enable/Disable HDR (HDR is not supported when the resolution is set to 59.94 or 50 fps).
2.	White Balance	 ■ Mode: Select the color temperature ■ One Push: Executes a one-time color temperature adjustment (configurable in [One Push WB] mode) ■ Manual Red/Blue: Manually adjust red/blue color temperature
3.	Focus	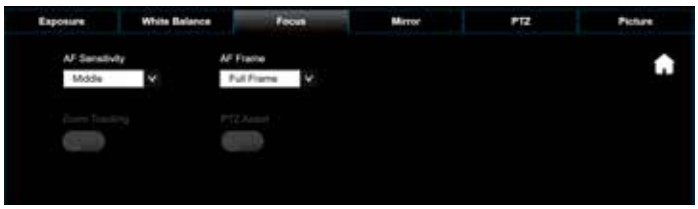 ■ AF Sensitivity: change the sensitivity of the auto focus. ■ AF Frame: Changes the focusing zone to the selected mode. ■ Zoom Tracking: The focus mode during lens zooming (can be set in "Manual") ■ PTZ Assist: Available when Focus is in Manual Mode Note PTZ Assist is triggered only when the camera has moved in any axis. It will not dynamically respond to changes in the scene.

4.	Mirror	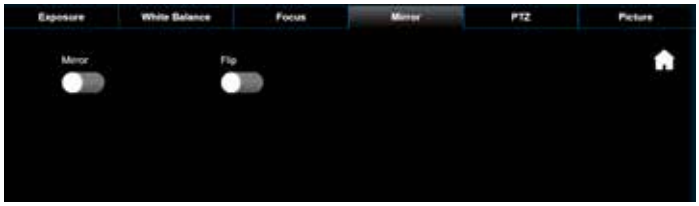 ■ Mirror: Set image mirroring ■ Flip: Set the mode at which the image is turned
5.	Pan Tilt Zoom (PTZ)	 ■ Pan/Tilt Limit: Enable to set the pan/tilt limit ■ Pan/Tilt Flip: Set On to reverse the Pan/Tilt direction. ■ Preset Speed: Set the rotation speed of the robotic head when a Preset is executed ■ Initial Position: Set the camera lens to return to the **Last MEM** or the **1st Preset** after POWER ON Note 1st **Preset**= Preset 0 ■ D-Zoom Mode: Enable/ Disable digital zoom ■ D-Zoom Limit: Set the digital zoom limit Note Stream/ USB/ 4K resolution does not support digital zoom PTZ Speed Comp: The Pan/Tilt robotic speed will vary according to the zoom position ■ Motionless Preset: Image will freeze when a preset is activated. Freeze will be released after a Preset camera move has been completed
6.	Picture	 ■ 3D noise reduction: 3D noise reduction settings ■ Image Mode: Users can customize image parameters ■ Brightness: Adjustable when **Image Mode** is set to **Custom** ■ Gamma: Adjustable when **Image Mode** is set to **Custom** ■ Saturation: Adjustable when **Image Mode** is set to **Custom** ■ Sharpness: Adjusts the sharpness level ■ Contrast: Adjustable when **Image Mode** is set to **Custom**
7.	PTZ Control	Go back to PTZ Control page

5.2.4 Tracking



No	Item	Descriptions
1.	Camera ID/Location	Display camera ID/ location. Please refer to 5.2.8 System-Device
2.	PTZ preview	Display the live view of the main lens.
3.	Panoramic preview	Display the live view of the panoramic lens
4.	Lens Tilt Direction	Set the tilt position for the panoramic lens Note Ensure the setting matches the actual installed tilt angle of the camera. Please refer to **3.2.5 Tilting the Panoramic Lens**
5.	People Count	Display the number of people visible to the panoramic camera
6.	Tracking	Enable/ Disable Auto Tracking/ Auto Framing Note ■ Select Auto Tracking or Auto Framing ■ Not applicable with [Center Stage] mode
7.	Zoom	Zoom In/Zoom Out image
8.	Pan/ Tilt	Adjust the Pan/Tilt of the camera Note PTZ setting is not supported when tracking is enabled
9.	Take turn	Switch the target Note Applicable in [Auto Tracking] mode only
10.	Setting Area	Display the configured tracking and blocked areas in the panoramic preview screen. Note Applicable in [Auto Tracking] mode only
11.	Designated ID	Display individuals the camera has detected Target ID can be switched by clicking on a subject with the mouse Note Not applicable in [Center Stage] mode
12.	Tracking Mode	Set the Tracking Mode ■ Auto Tracking: Everywhere Tracking/ Stage Tracking/ Partition Tracking ■ Center Stage ■ Auto Framing: Auto Framing/ Partition Framing

13.	Sensitivity	Set tracking sensitivity
14.	Tracking Speed	Set tracking speed
15.	Target Lost Time	Set a delay to take action after a tracking target is lost
16.	Target Lost Action	Set the action after a tracking target is lost
17.	Auto-trigger zone	After a person enters the area for 3 seconds, tracking/ framing will be triggered Note ■ [Tracking Mode]> [Center Stage] is not supported. ■ Enabling Auto Tracking/ Auto Framing will disable the [Auto-trigger zone] function ■ Stopping Auto Tracking/ Auto Framing will reactivate the [Auto-trigger zone] function
18.	Tracking Mode Setting	Advanced settings for tracking
18.1	Everywhere tracking	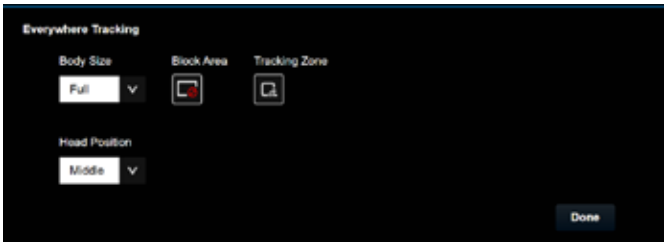 ■ Body Size: Set Full/ Half Body ■ Head Position: Set the head position of the person in the screen ■ Block Area: Click the left mouse button to draw a frame on the panoramic view to set a blocked area ■ Tracking Zone: Click the left mouse button to draw a frame on the panoramic view to set a designated tracking area
18.2	Stage Tracking	 ■ Body Size: Set Full/ Half Body ■ Head Position: Set the head position of the person in the screen ■ Block Area: Click the left mouse button to draw a frame on the panoramic view to set a block area ■ Tracking Zone: Click the left mouse button to draw a frame on the panoramic view to set a designated tracking area
18.3	Partition Tracking	Set Partition Tracking. Up to 4 zones can be set

<table>
<tr><td>18.3</td><td>Partition Tracking</td><td>When a person enters the specific zone, the camera switches to the partition. Tracking will not be performed within the zone. Outside the zone, everywhere tracking will be active.
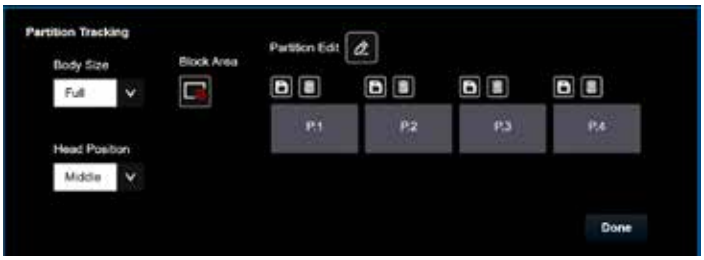

■ Head Position: Set the head position of the person on the screen
■ Block Area: Click into the Edit mode, frame by holding the left mouse button and set the blocked area
■ Block Area: Click the left mouse button to draw a frame on the panoramic view to set a blocked area
■ Partition Edit: Edit and save partition positions</td></tr>
<tr><td>18.4</td><td>Auto Framing</td><td>

■ Block Area: Click to enter the Edit mode. Frame by holding the left mouse button and set the block area</td></tr>
<tr><td>18.5</td><td>Partition Framing</td><td>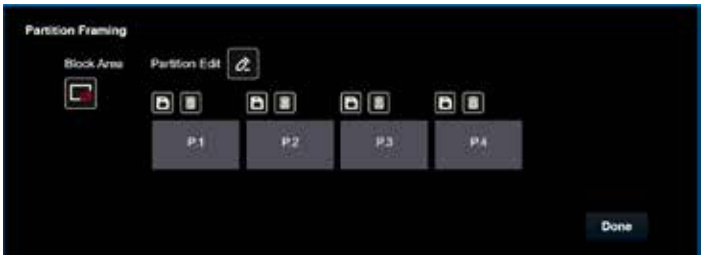

■ Block Area: Click the left mouse button to draw a frame on the panoramic view to set a block area
■ Partition Edit: Edit and save partition positions</td></tr>
</table>

5.2.5 Audio

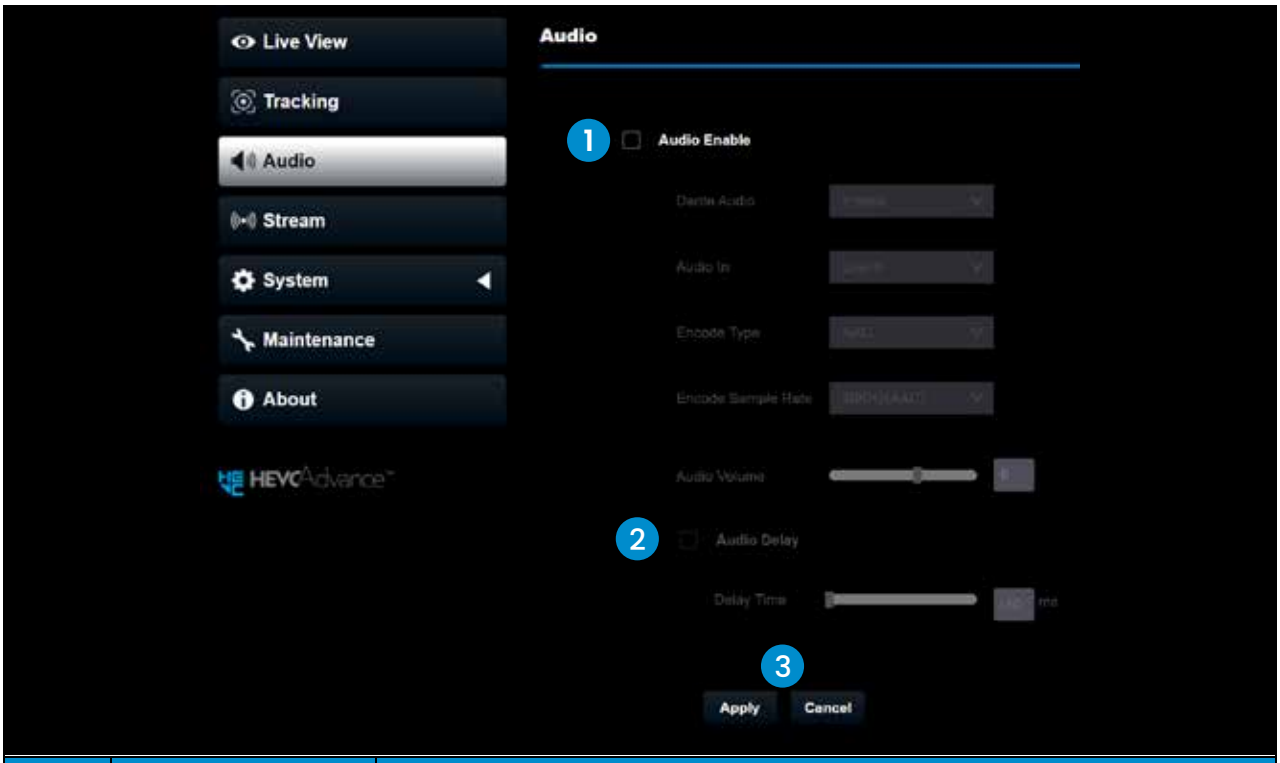

No	Item	Descriptions
1	Audio Enable	Select to enable Audio function ■ Audio In: Line In ■ Encode type: AAC ■ Encode sample rate: 48KHz (AAC) ■ Volume: Adjust Audio Volume
2	Audio Delay	Check to set the audio delay time (10 - -500 ms)
3	Apply/ Cancel	Apply/ Cancel Audio Settings

5.2.6 Stream

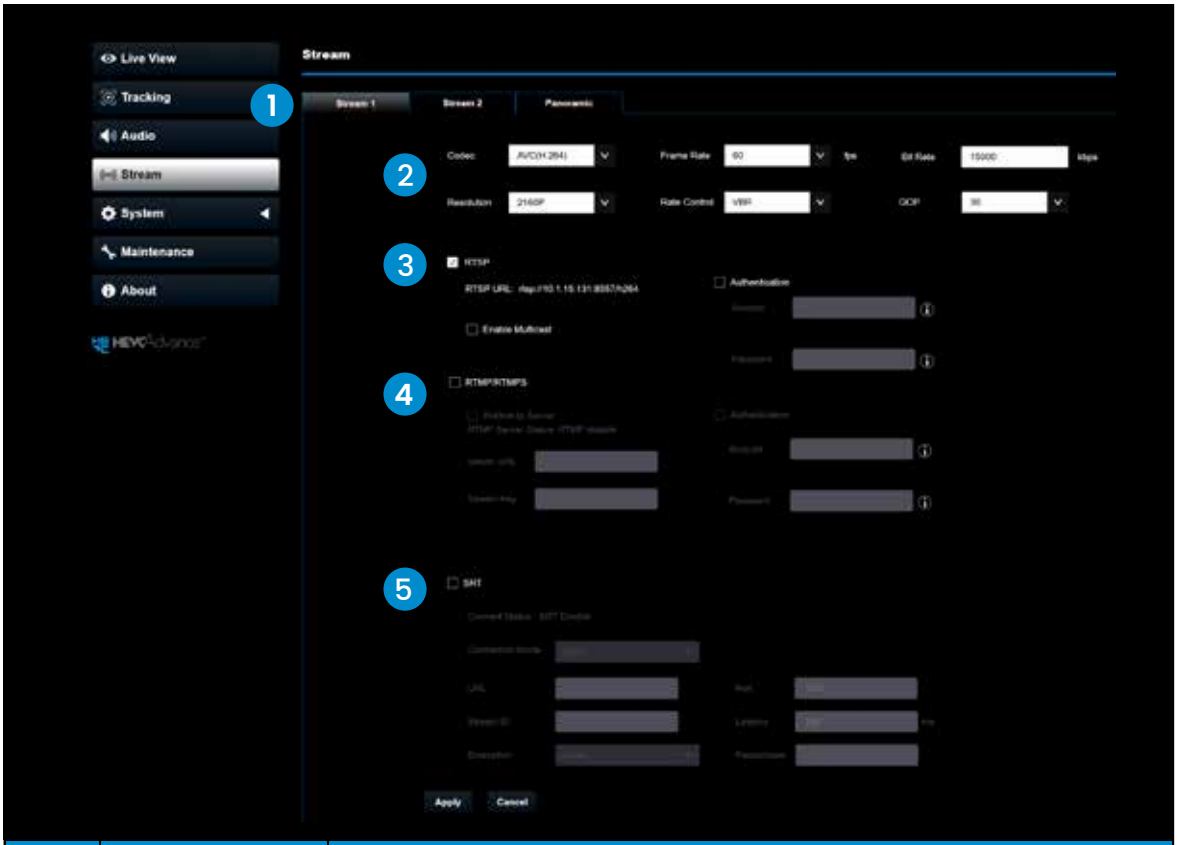

No	Item	Descriptions
1	Stream	Supports 2 streams/ NDI/ Pnoramic live stream
2	Stream settings	Please refer to 5.2.6.1 Stream Settings.
3	RTSP	Select to enable RTSP ■ Enable/ Disable Multicast Multicast is recommended when the stream is watched by more than 4 viewers ■ Enable/Disable Password Authentication ■ Please refer to 5.1.3 Using RTSP Player to View the Images for the connection format ■ The username/ password is the same as the web login password of the camera. Refer to 5.2.12 System Settings - User to add/modify account information
4	RTMP/ RTMPS	Use the RTMP URL provided by the RTMP service platform to publish the camera live view For YouTube streaming, refer to 5.2.5 Audio to turn on the audio function
5	SRT	■ Check to enable and set SRT streaming After the SRT streaming is opened, it will be connected automatically upon camera startup ■ The port number must be set in the range above 1024 with a maximum value of 65535 Note The following ports are used by the camera. Setting the ports may result in connection issues.

5.2.6.1 Streaming Settings

Function		Stream 1	Stream 2
Encode Format		HEVC/ H.264	H.264
Resolution		4K/ 1080p/ 720p	720p
Bit rate	Bit rate	2,000-20,000	2,000-20,000
	Default	7,000	3,000
Rate Control		CBR / VBR	
Frame Rate/ Group of Pictures		Setting according to the supported resolution	

5.2.7 Stream - NDI

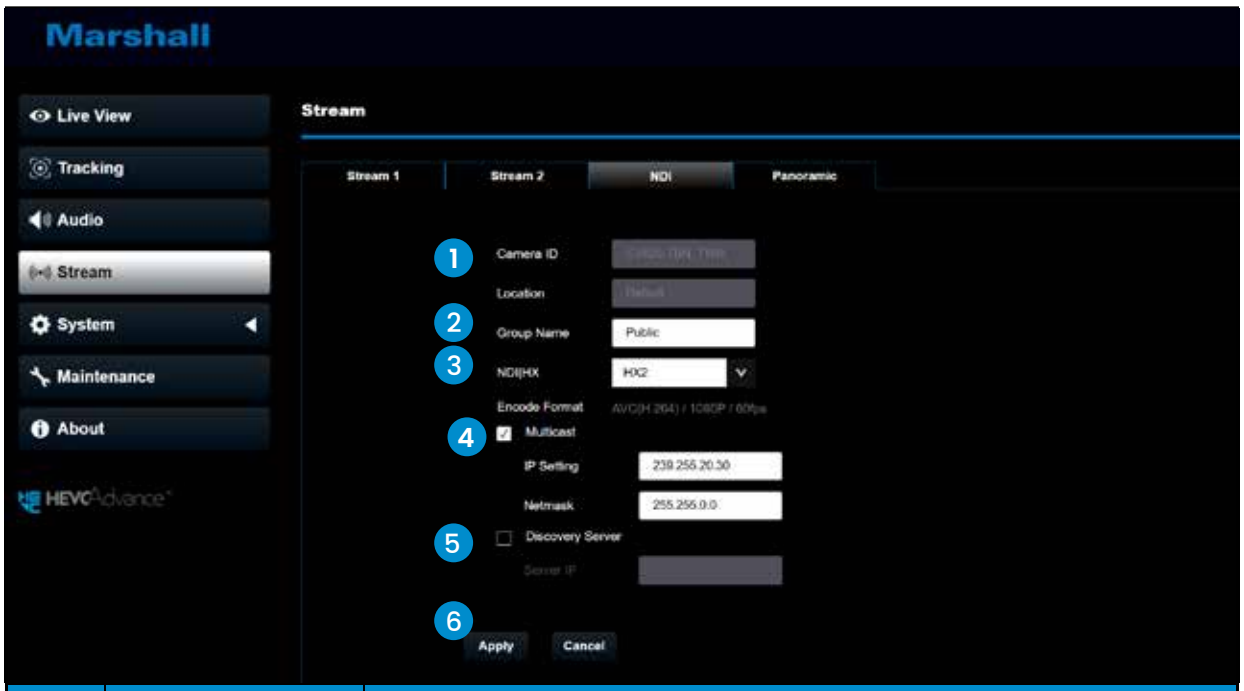

No	Item	Function Descriptions
1	Camera ID/ Location	Displaying ID/location according to [System] > [Output] settings
2	Group Name	The group name can be modified here and set with Access Manager - Receive in NDI Tool ■ If no group is assigned, the machine belongs to Public. As the default of Access Manager includes Public, Studio Monitor can discover this machine. ■ If a group is assigned, but this group is not added into Access Manager, Studio Monitor cannot discover this machine. ■ If a group is assigned and this group is added into Access Manager, Studio Monitor can discover this machine. Note The name can contain commas (,) to distinguish different groups Example: "default, 123, abc" means this machine belongs to three groups at the same time (default/ 123/ abc)
3	NDI|HX	HX2/ HX3 is supported
4	Multicast	Multicast Settings. It is recommended to enable this feature when there are more than 4 viewers online simultaneous
5	Discovery Server	Check to enter the Server IP address
6	Apply	After the setting has been modified, click this button to apply the settings

5.2.8 System - Device



Descriptions
Edit camera ID/ Location ■ Camera ID: Supports 1 - 32 characters ■ Location: Supports 1 - 30 characters ■ Supports English, Chinese and numbers. Special symbols such as "/" and "space" cannot be used Note Modifying this field will also update the ONVIF device name/location.

5.2.9 System - Output

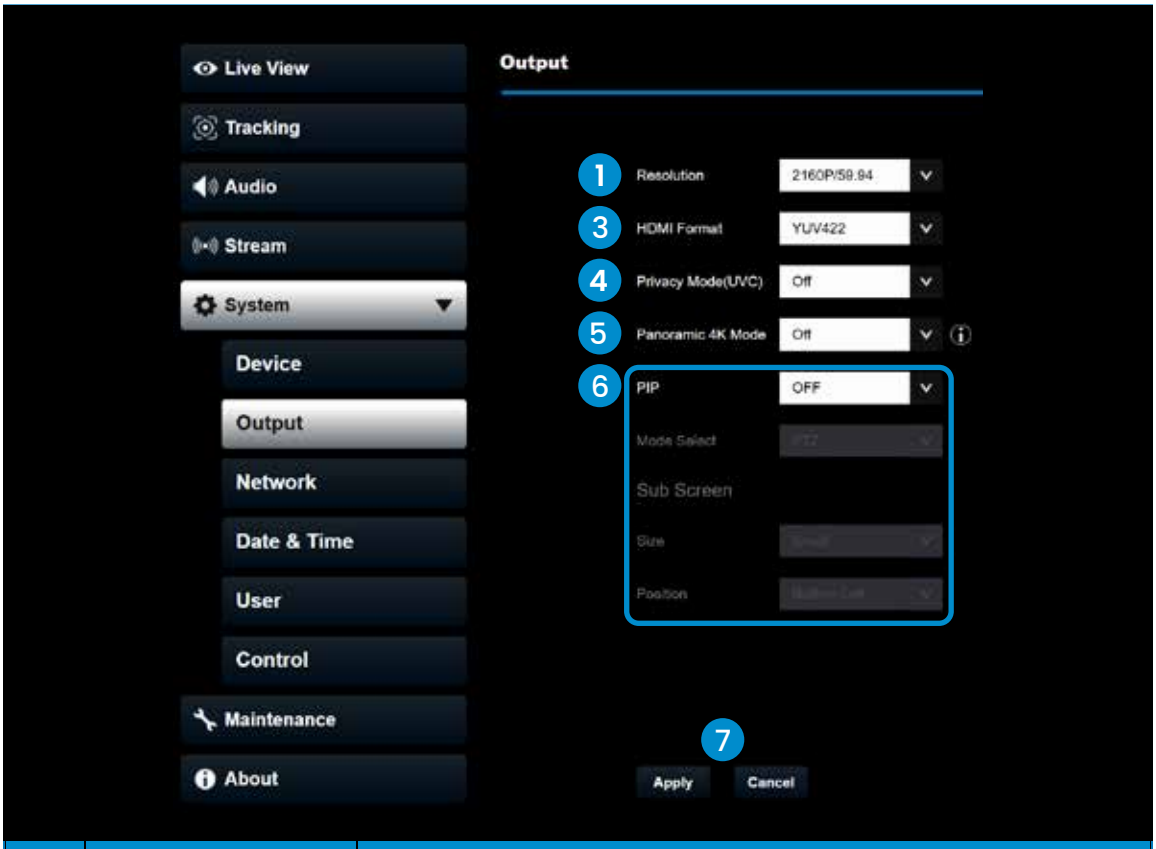

No	Item	Descriptions
1	Resolution	Set the resolution of the camera (1080i is only available via HDMI. If selected, SDI will still output 1080p) Note After changing resolution, the camera will restart. The browser will need to be refreshed
2	HDMI Output Source	Configure PTZ/ Panoramic Output
3	HDMI Format	Supporting YUV422/ RGB
4	Privacy Mode (UVC)	After the privacy mode is enabled, when the camera is turned off via the remote control or software, the lens will automatically turn to the bottom right to ensure the user' s privacy
5	Panoramic 4K Mode	Supports 4K output Note This mode is available when the resolution is set to 4K 60/30fps UVC is limited to 720p when Panoramic 4K mode is selected After changing resolution, the camera will restart. The browser will need to be refreshed
6	PIP	Enable/Disable PIP(Picture-in-Picture) Mode Select: PTZ / Panoramic Sub Screen Size: Set the size of the sub-screen Position: Set the display position of the sub-screen
7	Apply/ Cancel	Apply/ Cancel Setting

5.2.10 System - Network

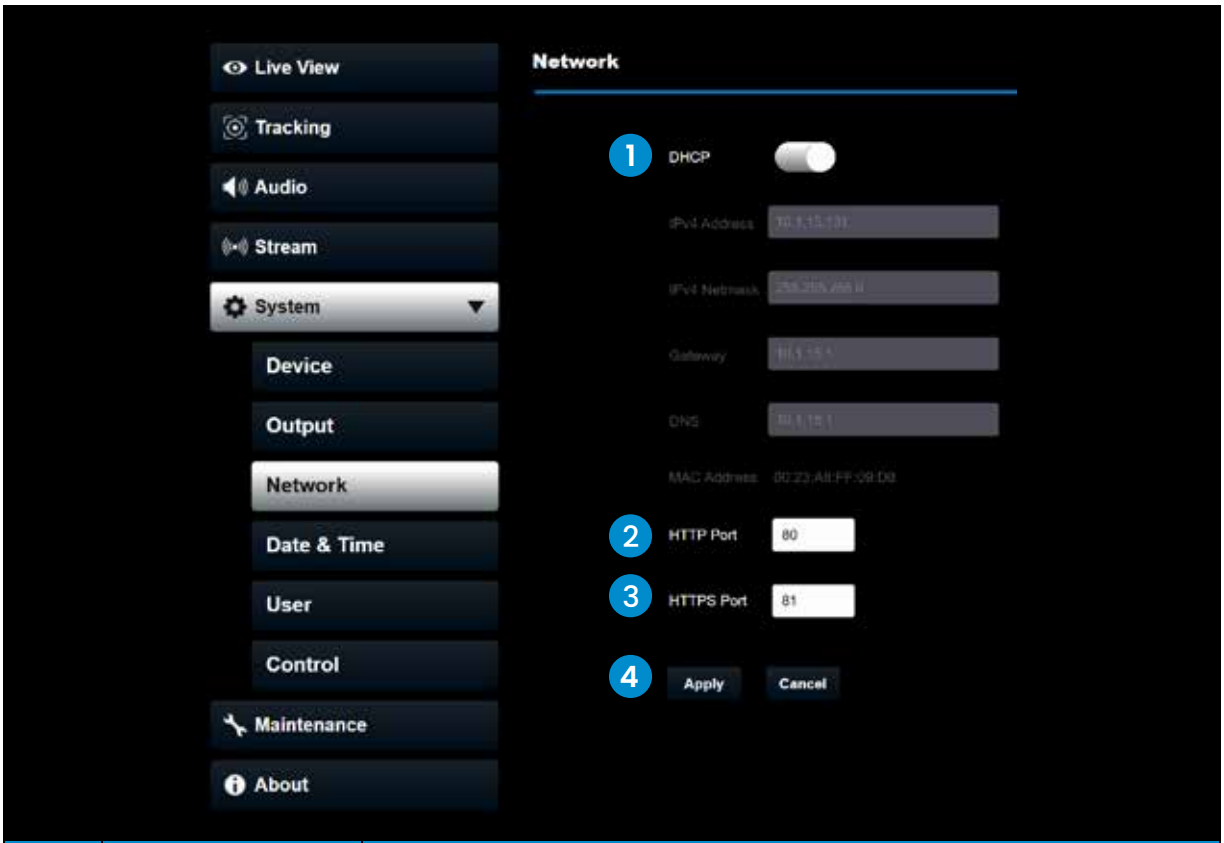

No	Item	Descriptions
1	DHCP	Camera network settings. Configurable when DHCP is set to Off
2	HTTP Port	Set HTTP port. The default Port value is 80
3	HTTPS Port	Set HTTPS port. The default Port value is 81
4	Apply/ Cancel	Apply/ Cancel Setting

5.2.11 System - Date & Time

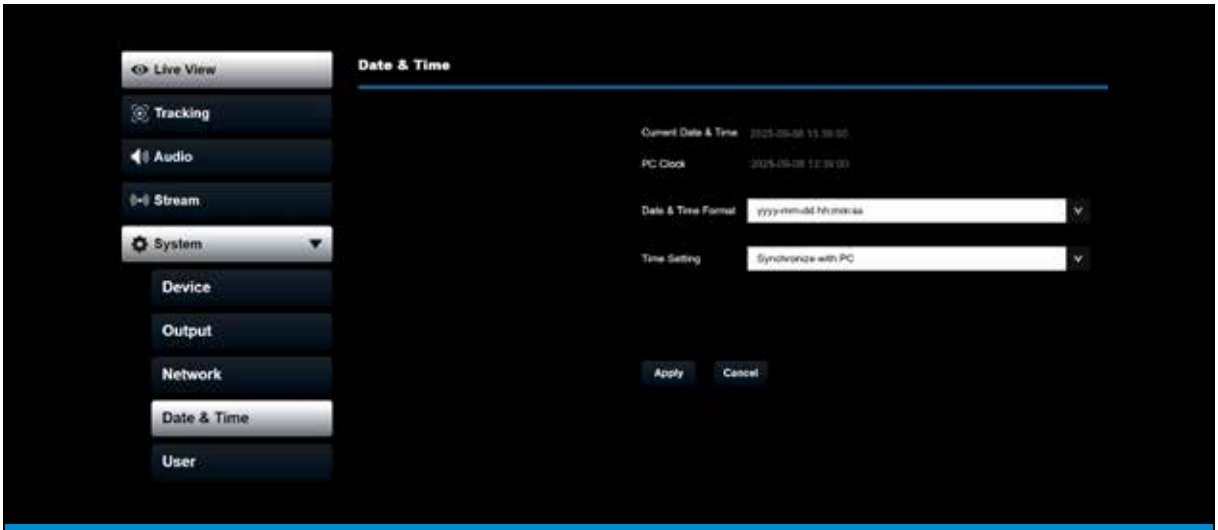

Description
Display the current camera/PC date/time and set the display format. Manually set [Time Settings], Date & Time or synchronize with your PC.

5.2.12 System - User

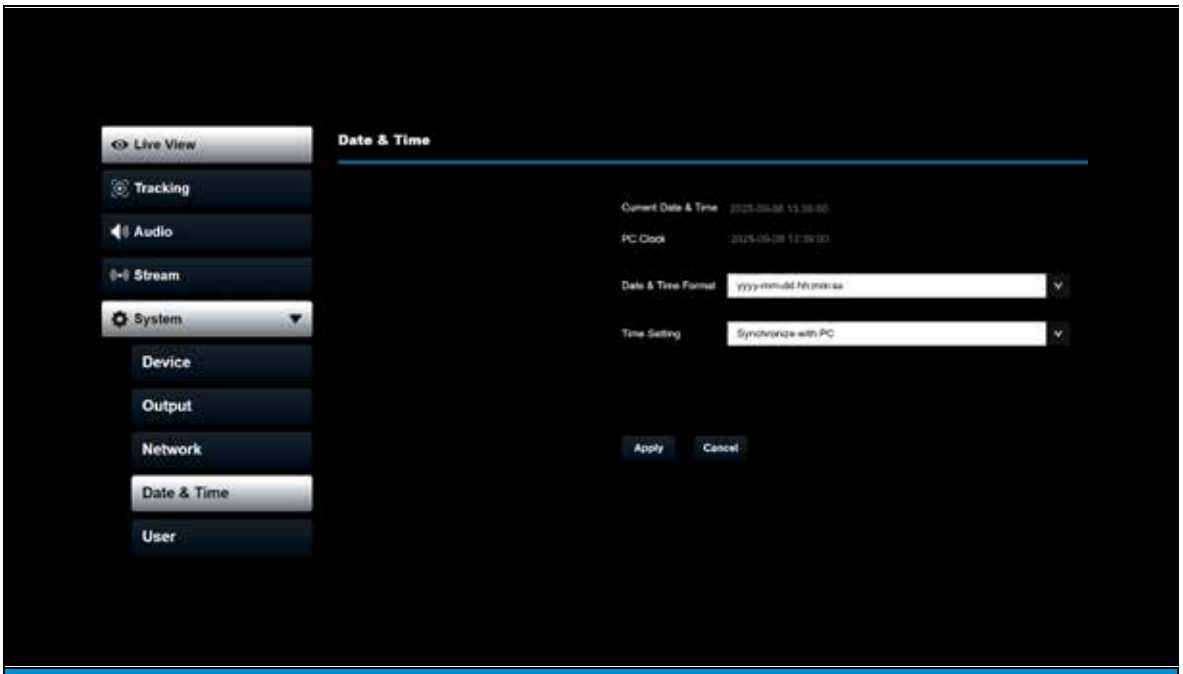

Description

Add/Modify/Delete user account

- User name and password supports 4 - 32 characters
- Use uppercase, lowercase letters or numbers. Special symbols cannot be used
- Account permissions:

User Type	Admin	Operator	Viewer
Live View	V	V	V
Settings	V	V	X
Account management	V	X	X

Note Performing a factory reset will clear all user data.

5.2.13 System - Control

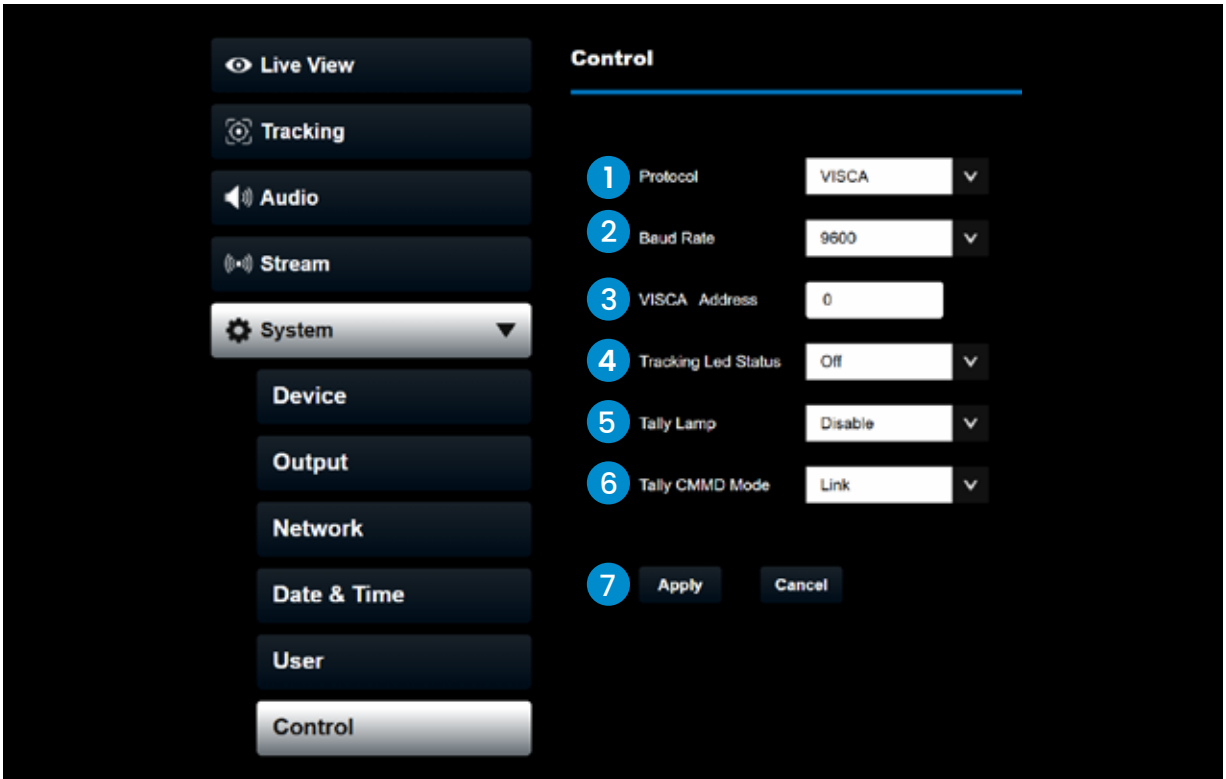

No	Item	Function Descriptions
1	Protocol	Supports VISCA protocol
2	Baud Rate	Select the transmission speed of the control signals
3	VISCA address	The camera ID address 0 - 7 can be assigned
4	Tracking LED status	When enabled, the LED on the front panel will flash green during tracking
5	Tally Lamp	Enable/ disable the tally lamp
6	Tally CMMD Mode	Set whether the tally lamp is linked with RS232 commands ■ Normal (Not linked): The tally lamp and mode are set separately When the tally lamp is on but the default mode is off, an additional command is required to set the indicator light mode When the tally lamp is off, setting the mode will not trigger the indicator light ■ Link: When the tally lamp is on, the default mode is red light When the tally lamp is off, setting the mode will turn on the tally lamp.
7	Apply/ Cancel	Apply/ Cancel Setting

5.2.14 Maintenance

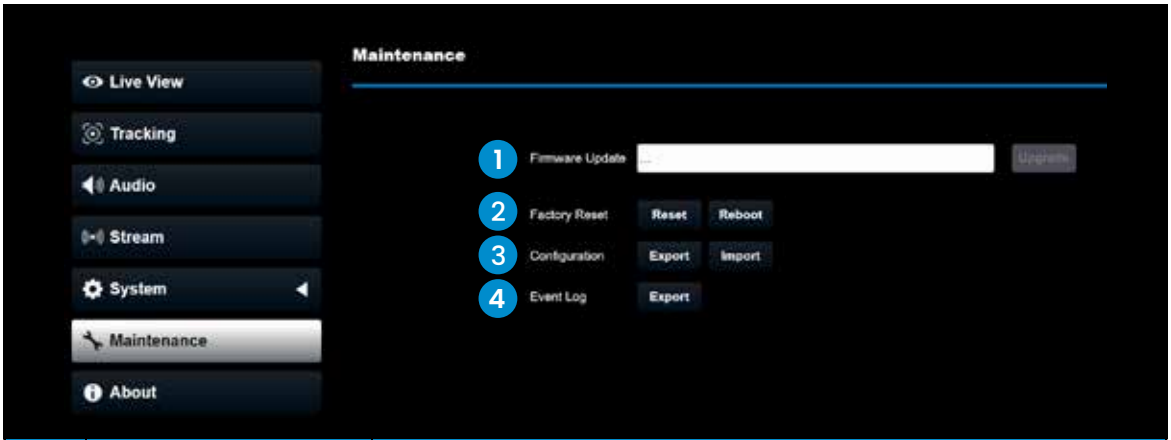

No	Item	Descriptions
1	Firmware Update	Click [....] to select the firmware file and click [Upgrade] to start updating Note ■ The update process takes 2-3 minutes ■ Do not operate or turn off the power of the device during the update to avoid firmware failure
2	Factory Reset	■ Reset all configurations to default settings ■ Reboot the camera
3	Configuration	Save parameters as a Profile. Users can share camera setup parameters
4	Event Log	If the camera operates abnormally, please export event log and provide it to Marshall Electronics for investigation

5.2.15 About

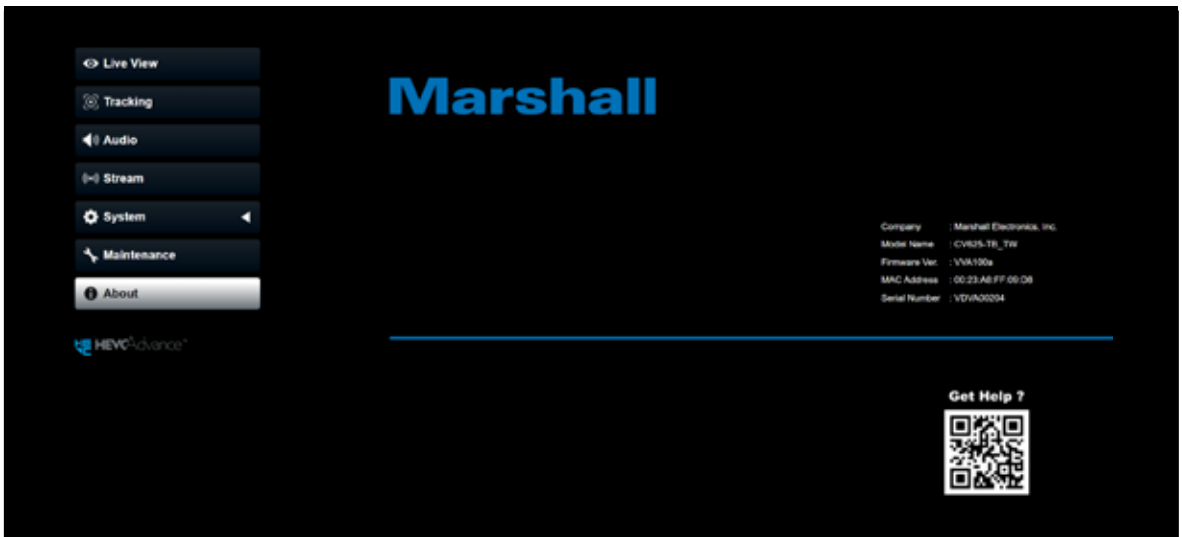

Description
Display the firmware version, serial number, and other related information. For technical support, please scan the QR code at the bottom right.

Chapter 6: Troubleshooting

This chapter describes problems you may encounter while using camera. If you have questions, please refer to related chapters and follow all the suggested solutions.
If the problem still occurs, please contact your local distributor or Marshall Electronics.

No.	Problems	Solutions
1.	No power to the device	1. Make sure you plug in the power cord 2. When using a PoE connection, ensure that the power supply supports PoE+ (IEEE802.3at)
2.	There is no image output from camera	1. Check the power supply or PoE supply functions 2. Confirm whether the camera resolution can be used with the connected display ■ If the camera is set to 4K resolution, output, confirm the display supports 4K output 3. Replace the cable and make sure it' s not faulty
3.	Camera image is severely delayed	Use 60/50 fps rather than 25/30 fps signals
4.	RS-232 cannot be controlled	1. Confirm the connection is correct (RS-232 In/ Out) 2. Please make sure the Baud rate setting is the same as the control device
5.	ONVIF software cannot discover the camera	Please make sure that [System]> [Device]> [Camera ID]/ [Location] in the web page uses only English letters or numbers. The ONVIF software cannot find the camera if you use special symbols or space
6.	The camera does not save relevant parameters (PTZ, AWB ...) after reboot	Please make sure if the [Initial Position] is set to [Last MEM] from the setting menu or web page ■ OSD Menu: [System]> [Initial Position] ■ Web page: [Live View]> [Setting⚙]> [PTZ]> [Initial Position]
7.	How to log into the webpage if you have forgotten the password	Please contact your local distributor or Marshall technical support
8.	Admin password when deleting the User Account	Please contact your local distributor or Marshall technical support
9.	No image on SDI output when resolution is set to 1080i	This camera does not support 1080i output over SDI. If 1080i is selected, the SDI port will continue to output 1080p. If 1080i is required, consider using an HDMI-to-SDI converter to output the image from the HDMI port.
10.	No Image on HDMI output	Check EDID date from HDMI displays. EDID data is required for HDMI displays to function correcctly.

Chapter 7: Addendum

7.1 Camera Size

- Length x Width x Height: 174 x 186.65x 197.11mm
- Weight: 2.2Kg

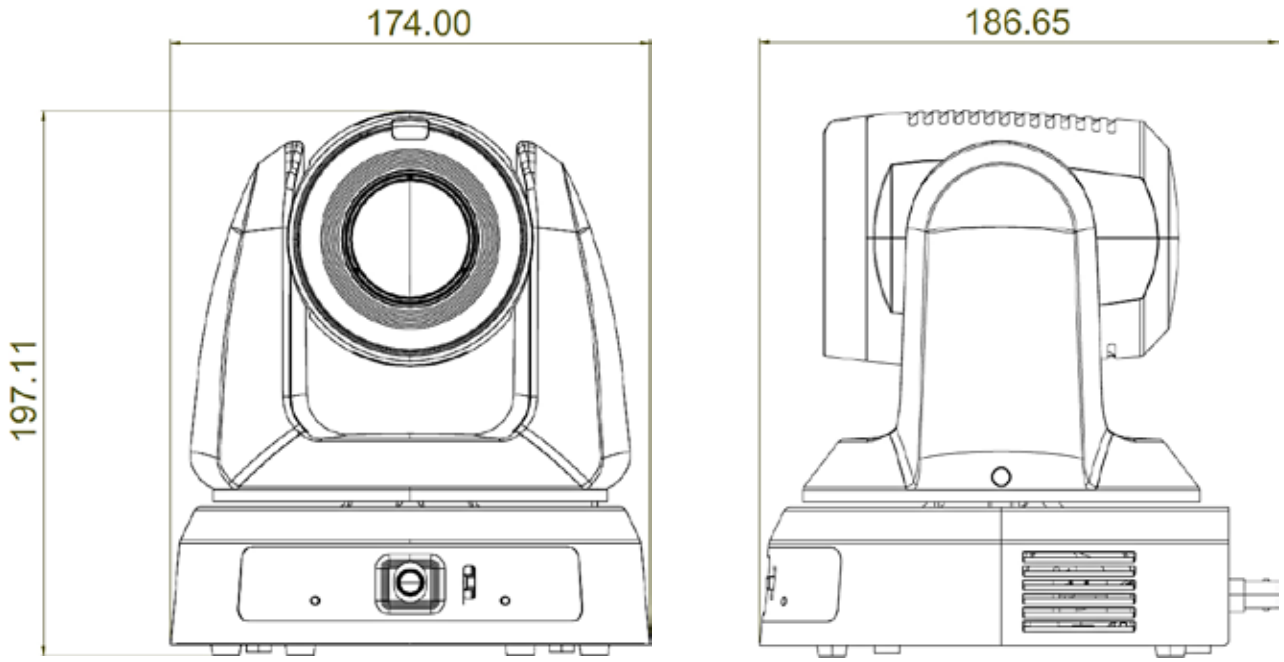

7.2 Dimensions of the Base

The camera can be mounted on a 1/4"-20 UNC PTZ tripod head by using the locking holes on the bottom.

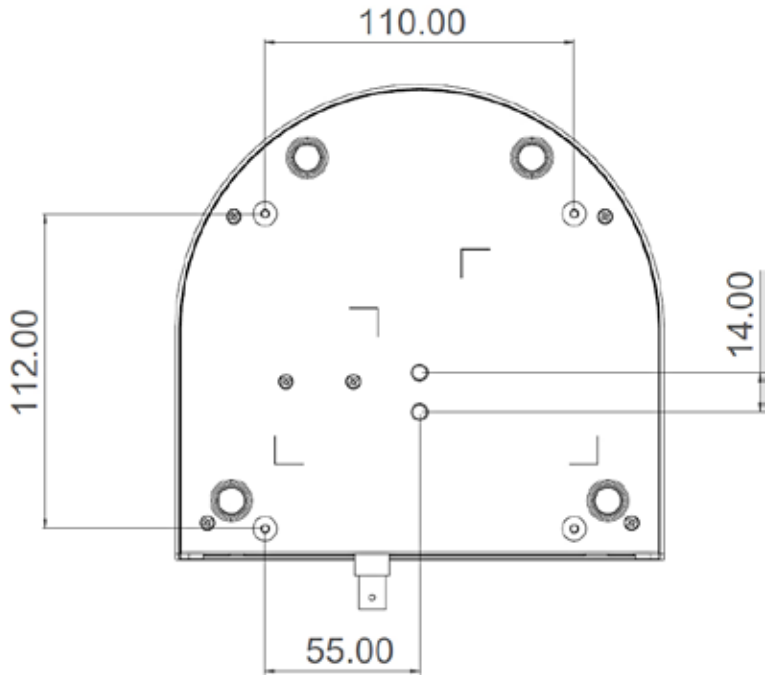

7.3 Metal Plate Diagram

(1) Metal Plate A - Camera Side

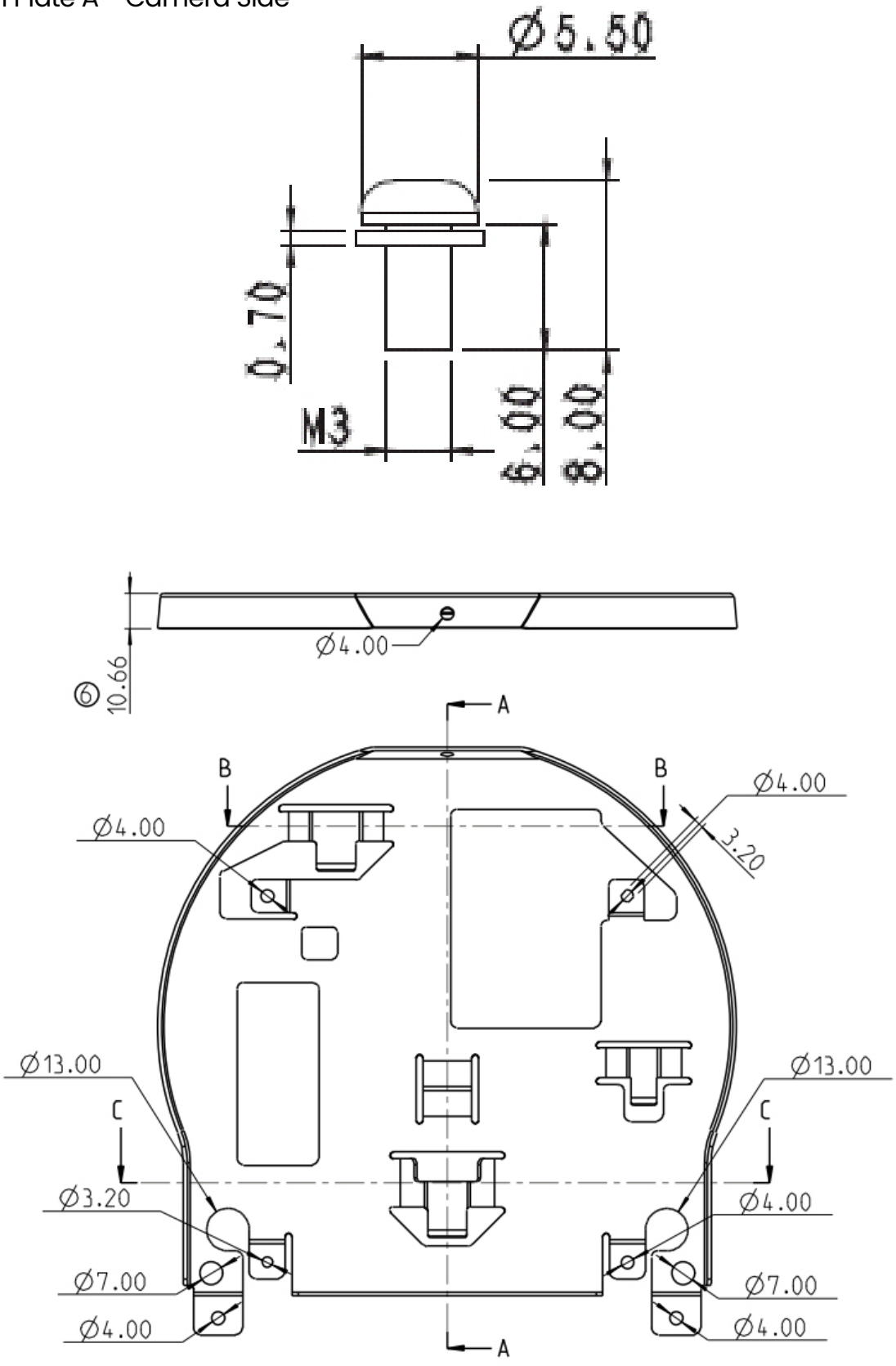

Metal Plate A - Camera Side

(2) Metal Plate B - Ceiling Side

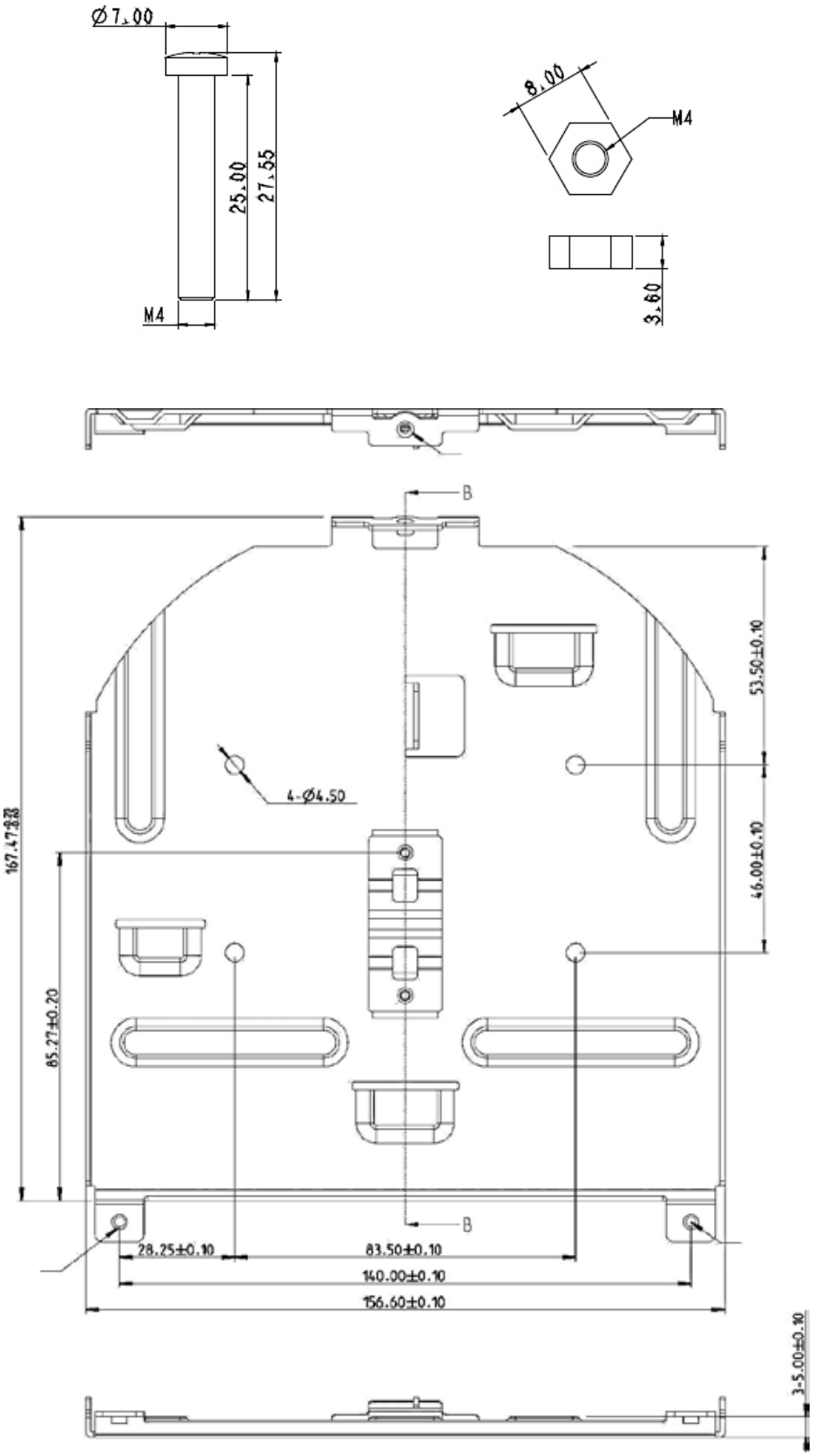

Metal Plate B - Ceiling Side

7.4 Y-ADP-RS232 Instructions

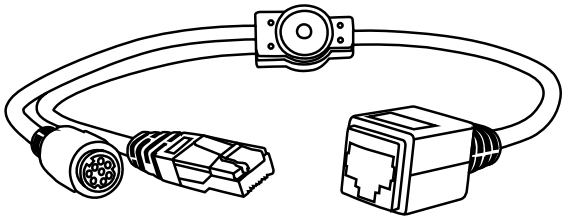

The **Y-ADP-RS232** enables long-distance RS232 communication between our CV620-BI2/ WI2 or CV625-TB /TW, TBN/ TWN PTZ camera models and our VS-PTC-300 or VS-PTC-200 controllers. The cable is quick to set up and easy to use, extending the distance between the controller and camera up to a maximum of 300 feet (100 meters) when used in conjunction with an Ethernet cable.

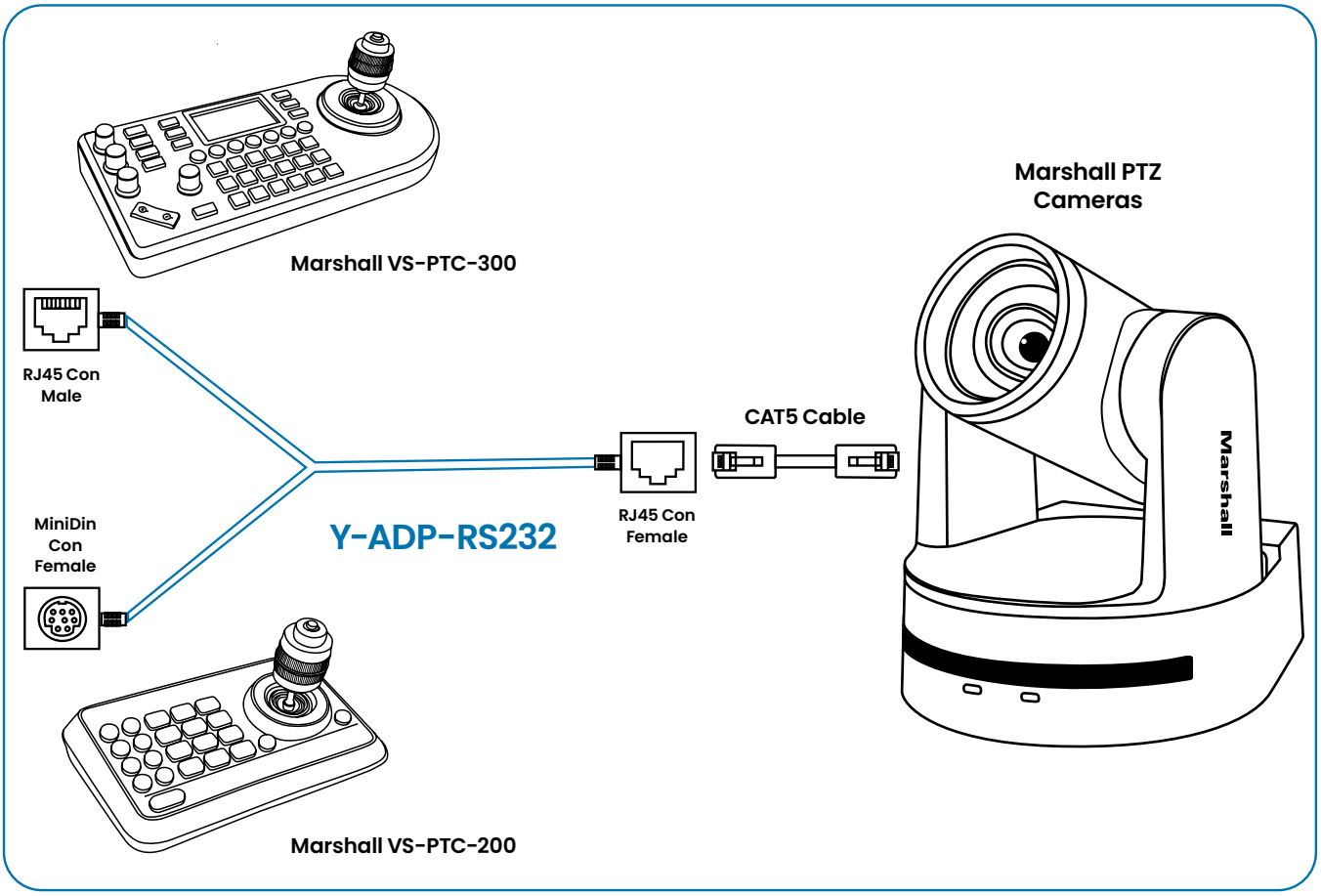

Chapter 8: Safety Instructions

Always follow these safety instructions when setting up and using PTZ Video Camera:

1. Operation

1.1 Please use the product in the recommended operating environment, away from water or source of heat

1.2 Do not place the product on a tilted position or unstable trolley, stand or table.

1.3 Please clean the dust on the power plug prior to usage. **To prevent sparks or a fire, do not insert the product's power plug into a multi-plug or power strip.**

1.4 Do not block the slots and openings in the case of the product. They provide ventilation and prevent the product from overheating.

1.5 Do not open or remove covers, otherwise it may expose you to dangerous voltages and other hazards. Refer all servicing to licensed service personnel.

1.6 Unplug the product from the wall outlet and refer servicing to licensed service personnel if the following situations happens:

- If the power cords are damaged or frayed.
- If liquid is spilled into the product or the product has been exposed to rain or water.

2. Installation

2.1 For security considerations, please make sure the standard hanging rack you bought is in line with UL or CE safety approbations and installed by technician personnel approved by agents.

3 Storage

3.1 Do not place the product where the cord can be stepped on as this may result in fraying or damage to the lead or the plug.

3.2 Unplug the product during thunderstorms or if it is not going to be used for an extended period.

3.3 Do not place the product or accessories on top of vibrating equipment or heated objects.

4. Cleaning

4.1 Disconnect all the cables prior to cleaning and wipe the surface with a dry* cloth.
Do not use alcohol or volatile solvents for cleaning.

■ Installation

	This symbol indicates that this equipment may contain dangerous voltage which could cause electric shock. Do not remove the cover (or back). No user-serviceable parts inside. **Refer servicing to licensed service personnel.**		WARNING This symbol indicates that there are important operating and maintenance instructions in this manual for this unit.

■ Battery Warning (For products or accessories with batteries)

General Safety Warnings:

- Do not heat or dispose of the battery in fire, as it may explode or leak.
- Metallic objects to connect them.
- Do not disassemble, crush, puncture, or modify the battery.
- Do not immerse the battery in water or any other liquids.

Usage and Storage Warnings:

- Do not store the battery in high-temperature environments (above 60°C) or in areas with high humidity.
- Keep away from direct sunlight and heat sources.
- If not in use for a long period, remove the battery and store it in a cool, dry place.

Disposal and Recycling Warnings:

- Do not dispose of the battery in household waste; follow local regulations for proper disposal and recycling.
- **If leakage occurs, avoid contact with the leaked substance and clean the affected area immediately.**

Child Safety Warnings:

- This product contains a button battery. Ingestion of a button battery can cause severe internal burns within 2 hours and may result in death.
- **If a battery is swallowed or if internal battery material is contacted, seek medical attention immediately.**
- Store batteries (whether new or used) in a place that is out of reach of children.
- If the battery compartment does not close securely, stop using the product and keep it away from children.

■ FCC Warning

This equipment has been tested and found to comply with the limits for a Class A digital device, pursuant to part 15 of the FCC Rules.

These limits are designed to provide reasonable protection against harmful interference when the equipment is operated in a commercial environment.

Notice :
The changes or modifications not expressly approved by the party responsible for compliance could void the user's authority to operate the equipment.

■ IC Warning

This digital apparatus does not exceed the Class A limits for radio noise emissions from digital apparatus as set out in the interference-causing equipment standard entitled "Digital Apparatus," ICES-003 of Industry Canada.

Cet appareil numerique respecte les limites de bruits radioelectriques applicables aux appareils numeriques de Classe A prescrites dans la norme sur le material brouilleur: "Appareils Numeriques," NMB-003 edictee par l'Industrie.

■ EN55032 CE Warning

Operation of this equipment in a residential environment could cause radio interference.

Copyright Information

Copyrights © Marshall Electronics, Inc. All rights reserved.

Copying, reproducing or transmitting this file is not allowed if a license is not provided by **Marshall Electronics, Inc.**, unless copying this file is for the purpose of backup after purchasing this product.

In order to keep improving the product, Marshall Electronics, Inc. hereby reserves the right to make changes to product specifications without prior notice. The information in this file is subject to change without prior notice.

To fully explain or describe how this product should be used, this manual may refer to names of other products or companies without any intention of infringement.

Disclaimer of warranties: Marshall Electronics, Inc. Is not responsible for any possible technological, editorial errors or omissions, nor responsible for any incidental or related damages arising from providing this file, using, or operating this product.

Warranty

For Warranty information please refer to Marshall website page:
https:marshall-usa.com/company/warranty.php