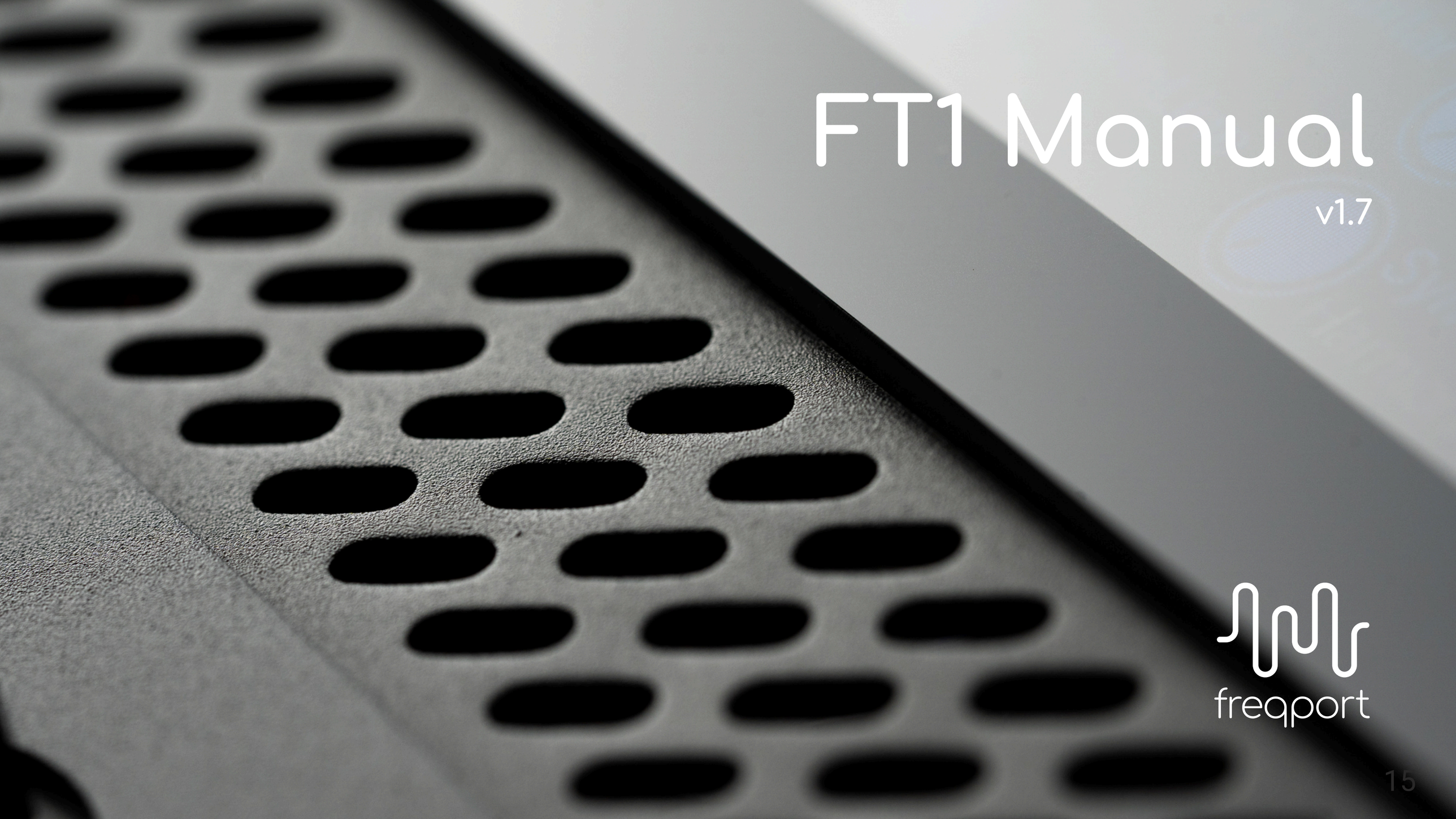

FT1 Manual

v1.7

freqport

Welcome

Freqport products have been developed for audio producers, engineers and song writers to enable them to craft better sound through pure analog processing - with all of the benefits of digital integration, control and recall.

"REAL ANALOG INSIDE YOUR COMPUTER"

The current product lineup is just the beginning and we would like to sincerely thank you for becoming part of our family.

THANK YOU :)

Quick Start

1. Register your product on freqport website and get access to FreqPortal customer portal.
2. Download installers from FreqPortal and install to default location on host computer and reboot.
3. Firmly plug the FT1 directly into a spare USB port on the host computer.
4. Turn-on power to the FT1.
5. Open your DAW, find FreqTube from the plugin list then add to an audio track.
6. Play, automate and enjoy the sound of real tubes in your DAW.
7. To render (bounce) the final track then ensure real-time rendering is used in your DAW.

Hardware

The FT1 FreqTube hardware is designed for achieving maximum analog performance with professional 32bit converters, all metal enclosure, and minimal aesthetic with full colour high resolution display to show assignments and status. DC power is converted to low noise high voltage within the unit. USB-C connectivity to a host computer is provided via rear connector.

top



- Full colour high res display shows trackname and control assignments. White indicator is physical knob value, black indicator is automation value. Filled colour knob means automation value is latched to the physical value.
- Factory calibrated + matched dual 12AT7 tubes shielded. Glows when powered on.
- Factory calibrated + matched dual E83CC/12AX7 tubes shielded. Glows when powered on.
- 8x assignable metal shaft control knobs
- All metal enclosure with grill for optimal airflow allowing adequate cooling

rear



- Power Switch
- Power input (use only freqport low noise power supply to maintain warrantee)
- USB-C connector for audio and control

freqport

Software

FreqTube is available as an installer for MAC and PC. The installed software consists of multiple plug-in formats along with a hub application and in the case of windows also a driver. Freqport is continuously working on updates and platform validation testing. Please refer to the freqport website for latest up-to-date compatibility and software releases.

Installation

1. First check Minimum System Requirements in the Knowledgebase section of the support, to ensure your system is compatible.
2. Register on FreqPortal to access all articles and support: *freqport.com/freqportal*
3. Download the appropriate installer for MAC or PC from the FreqPortal: *freqport.com/freqportal/freqsoft/*
4. For *Windows* please run Add or Remove Software and *uninstall* existing installation of FreqTube before installing and update.
5. Extract the installer from the zip file then run the installer (pkg, or exe).
6. Accept all licences and prompts to allow installation. Please only install to the default locations (do not install to a different location).
7. Reboot computer.
8. Ensure FT1 is firmly plugged directly into a spare USB port on the host computer.
9. Turn-on power to the FT1.

DAW and Plugin

All FT1 audio processing is done in hardware. The plugin UI shows all audio processing options and paths within the hardware. All controls are automobile and can be stored and recalled via presets.

- Before using your DAW check articles on optimizing your DAW for FreqTube in your FreqPortal.
- To use the plugin simply open your DAW, find FreqTube from the plugin list then add to an audio track.
- The maximum number of instances of the plugin you can open is the number of hardware tube circuits used. For example; a maximum of two stereo instances can be opened in a project.
- To render (bounce) the final track then ensure real-time rendering is used in your DAW.

Hub

A companion app called the hub is opened automatically in the background when any FreqTube plugin is used. The hub not required to be opened manually by the user at any time, other than to set some configuration settings during use, or showing status of the freqport system. Further details shown on the hub page.

Plugin

The plugin UI shows the hardware audio processing paths and controls.





Track colour will be assigned from daw automatically if daw supports, otherwise use palette to manually select colour. Colour is used in hardware knob control assigns.

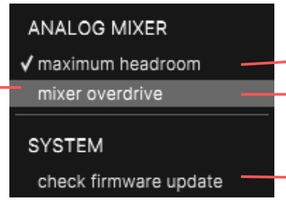

Extends tube drive circuit to maximum headroom.

Engages analog mixer limiting resulting in added overdrive.

This option will be green if firmware update is available.

Load, save and select presets. Current settings are saved with DAW project.

DAW track name and colour - used in hardware knob control assigns. Double click to manually name track if daw does not support.

Eye helper. Toggle between showing active audio paths, or hide paths.

Primary tube path filter(hardware based modeled digital). Enable or bypass.

Parallel path filter(hardware based modeled digital). Enable or bypass.

Analog tube drive level.

Parallel path filter controls. Click on label to enter value.

Analog tube overdrive drive setting.

Filter type: low pass, high pass, peaking or bandpass with 12 or 24dB/octable

Converter clipping indicator (only enabled when filter is disabled)

Tubes visible and shown in off condition can be powered on and used in this instance. Tubes not shown here (invisible) means they are used in another instance and cannot be selected.

Power a tube on or off. For stereo enable two tubes, for mono enable one tube. Use TILT for balance adjustment between the tubes

Harmonics visualization graphs

Analog tube circuit proprietary harmonics control with auto gain compensation

Assign any available of 8x hardware knobs to controls. Click once then move knob UI to assign. Double click to clear existing.

Parallel path phase invert (180deg phase shift).

Analog mixer between parallel and primary paths

Output meter and dac level control.

Use this bypass button (don't use native DAW bypass) when bypassing the FreqTube.

freqport

analogHUB

analogHub auto-runs in the background and is required for plugins to be used.
Generally, accessing analogHub is only required to optimize latency, update firmware or identify newly added Freqport Units.

Connection status.
Plugged or unplugged.

Version.
Displays software and firmware versions, sample-rate and host processor mode.

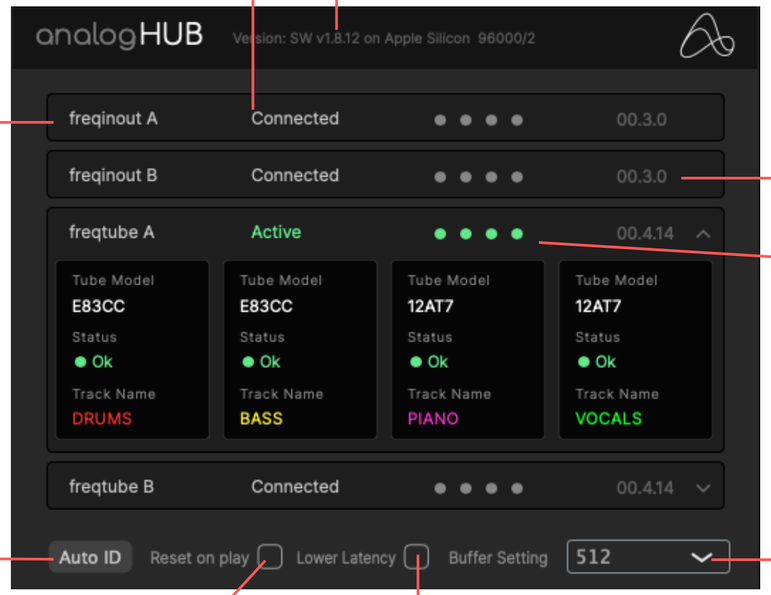

freqport product and ID (A,B..)

Firmware. displays current firmware version.

Channel mapping. Displays hardware mapping information per hardware channel (x4)

Auto ID.
Refer to Identifying Units page in this manual

Buffer setting.
Choose from drop-down menu to adjust. Usually set to 512.
Note that this setting is unrelated to your DAW's buffer setting.

Reset on play.
Reserved for future use (turn off)

Lower Latency.
When checked the freqport system will minimize latency as much as possible. Only select this if system performance allows.

freqport

Firmware Updater

Occasionally a hardware device firmware update will be part of the installed software. Firmware updates are done using the freqport updater app.

The updater app can be run from one of three methods:

- from plugin by selecting the "run firmware updater" setting (shown here), or
- from the hub when an update is available, or
- when daw is closed by manually opening freqtube_hub.app (osx) or freqtube_hub.exe (windows)



When an update is available the plugin will indicate by green highlights.



Click to start update

Warning: It is recomended to close the DAW before updating firmware.

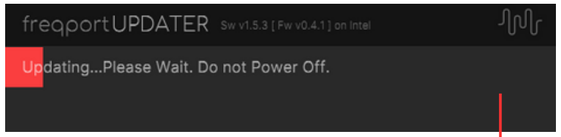

Wait for around one minute for update to complete.

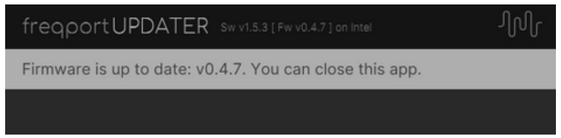

When update is finished, or already up to date then this message will be displayed.

Hardware Specifications

Power Input
24W DC power adaptor
Use only Freqport adaptor

Adaptor Mains
100Vac – 240Vac. 50/60Hz

Ambient Temperature Range
0 to 50C

Tube Circuit Specification
4 tubes, (2 pairs).
Pairs calibrated in -40 to 40 harmonics range to within +/-1dB (the Tilt feature may be required to achieve this at different input drive levels).
Higher voltage converter circuit on board for tube plate voltage.

USB Connector
Type-C 480 Mpbs

ADC/DAC Converters
Professional specification ESS Converters
120dB DNR 32bit DAC
116dB DNR 32bit ADC

Dimensions
Unit: 205mm x 130mm x 50mm (W x H x D)
Boxed: 350mm x 190mm x 80mm (W x H x D)

Weight
Unit: 810g
Boxed: 1.43kg

Control and Indication
Full Color Display
8 assignable knobs
Power switch

Block Schematic

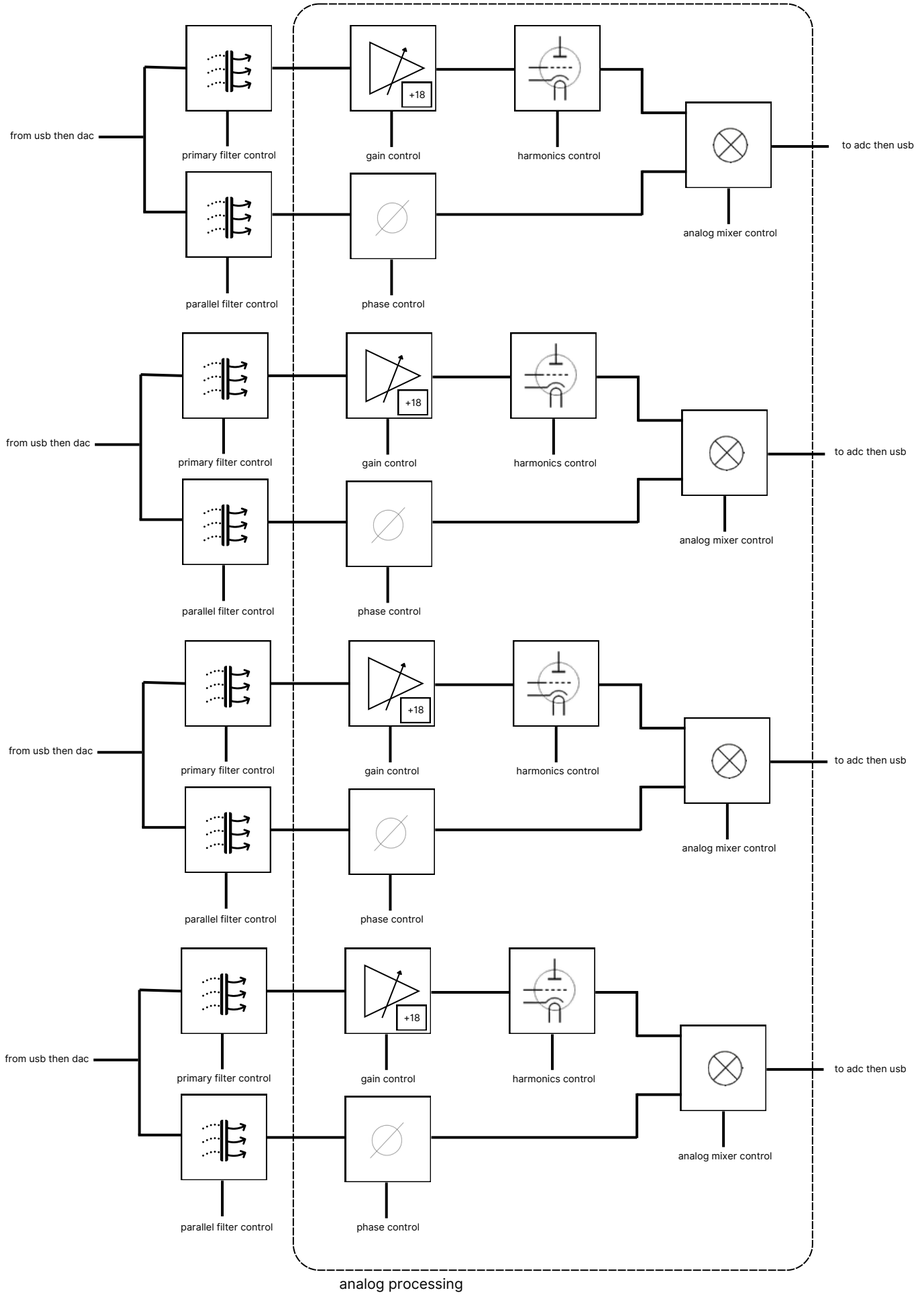

Tube channel 1 (E83CC/12AX7)

Tube channel 2 (E83CC/12AX7)

Tube channel 3 (12AT7)

Tube channel 4 (12AT7)

freqport

Notices

Important Safety Information

Before using this unit, be sure to carefully read the applicable items of these operating instructions and the safety suggestions. Afterwards, keep them handy for future reference.
Take special care to follow the warnings indicated on the unit, as well as in the operating instructions.

- Read and keep these instructions.
- Heed all warnings.
- Follow all instructions.
- Do not use this apparatus near water.
- Clean only with dry cloth.
- Do not block any ventilation openings. Install in accordance with the manufacturer's instructions.
- Do not install near any heat source such as radiators, heat registers, stoves, or other apparatus (including amplifiers) that produce heat.
- Use only a power supply sourced from freqport. Attach the power adapter blade that is suitable for your country. Do not force or modify any part of the product connectors.
- Protect the power cord from being walked on or pinched particularly at plugs, convenience receptacles, and the point where they exit from the apparatus.
- Only use with attachments/accessories specified by the manufacturer.
- Unplug this apparatus during lightning storms or when unused for long periods of time.
- Refer all servicing to qualified service personnel. Servicing is required when the apparatus has been damaged in any way, such as power-supply cord or plug is damaged, liquid has been spilled or objects have fallen into the apparatus, the apparatus has been exposed to rain or moisture, does not operate normally, or has been dropped.

United States FCC Manual Statement

This equipment has been tested and found to comply with the limits for a Class B digital device pursuant to Part 15 of the FCC Rules. These limits are designed to provide reasonable protection against harmful interference in a residential installation. This equipment generates, uses, and can radiate radio frequency energy and, if not installed and used in accordance with the instructions, may cause harmful interference to radio communications. However, there is no guarantee that interference will not occur in a particular installation. If this equipment does cause harmful interference to radio or television reception, which can be determined by turning the equipment off and on, the user is encouraged to try and correct the interference by one or more of the following measures:

- Reorient or relocate the receiving antenna.
- Increase the separation between the equipment and the receiver.
- Connect the equipment into an outlet on a circuit different from that to which the receiver is connected.
- Consult the dealer or an experienced radio/TV technician for help.

European Union CE regulation compliance statement



This product has been tested to comply with the Low Voltage Directive 2014/35/EU and the Electromagnetic Compatibility Directive 2014/30/EU. The product meets the requirements of RoHS 2 Directive 2011/65/EU.
This symbol indicates that your product must be disposed of properly according to local
laws and regulations.

Notices

Warranty

Freqport provides a limited warranty on all hardware products. To learn more, please visit www.freqport.com/terms-and-conditions. The limited warranty gives you specific legal rights. You may also have other rights which vary by state or country.

Trademarks

Freqport and FreqTube are trademarks or registered trademarks of freqport PTY, LTD.
Other company and product names mentioned herein are trademarks of their respective owners.
ASIO is a trademark and software of Steinberg Media Technologies GmbH.

Patent

Freqport and FreqTube products have patent pending, or afford patent protection. The associated technology and products are protected and owned by freqport PTY LTD.

Copyright

Copyright ©2022 freqport PTY, LTD. All rights reserved.
This manual and any associated software, artwork, product designs, and design concepts are subject to copyright protection. No part of this document may be reproduced, in any form, without prior written permission of freqport PTY, LTD.

Technical Support

Freqport Knowledge Base and FreqPortal are online technical resource for configuring, operating, troubleshooting, freqport products. You can watch helpful support videos, search the FAQ and articles for answers, get updated technical information, submit support tickets and more.

Please visit our website, register your product and get access to FreqPortal.

The information in this document is subject to change without notice and does not represent a commitment on the part of freqport PTY LTD. The software described by this document is subject to a License Agreement and may not be copied to other media. No part of this publication may be copied, reproduced or otherwise transmitted or recorded, for any purpose, without prior written permission by freqport PTY LTD, hereinafter referred to as freqport.

"freqport", FreqTube and associated logos are trademarks of freqport PTY LTD.

CONTACT US

support@freqport.com
sales@freqport.com

www.freqport.com

