# ASSEMBLY INSTRUCTION

## RT*FC/RT*MC | Tiny XLR Cable Connector

Ⓐ

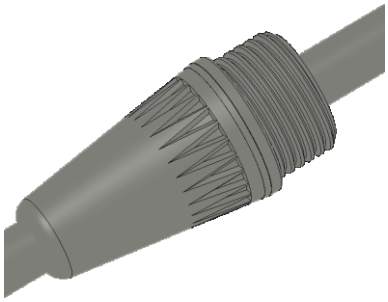

Ⓐ **Slide the boot onto the cable.**

Ⓑ

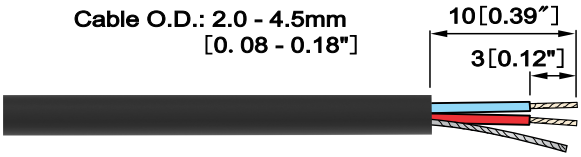


Ⓑ **Prepare cable as shown.**

Ⓒ

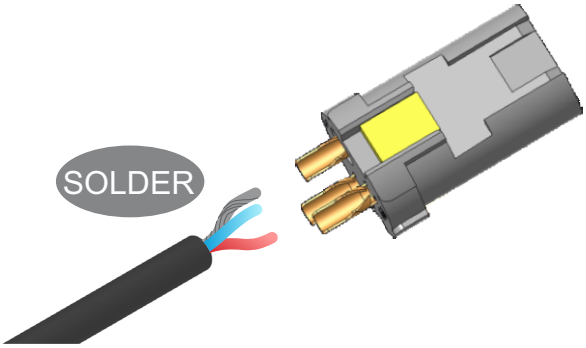


Ⓒ **Insert wires into terminals and solder them.**

Wiring : 3 pole

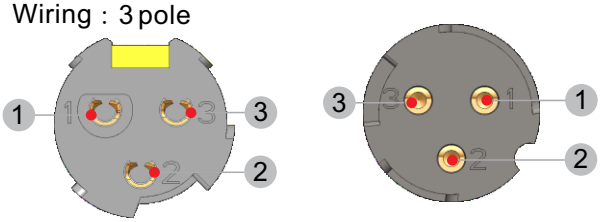


Wiring : 4 pole

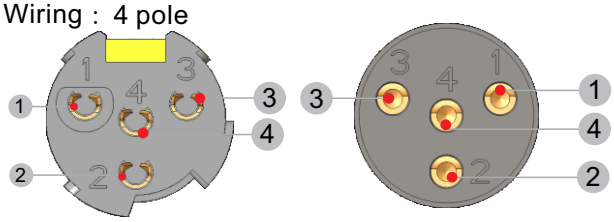


Wiring : 5 pole

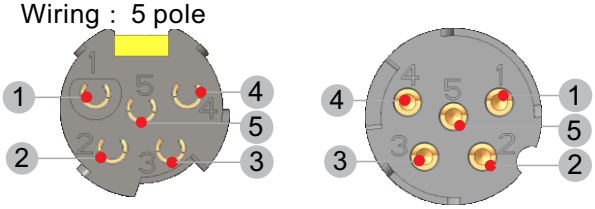


Female Insert

Male Insert

Ⓓ

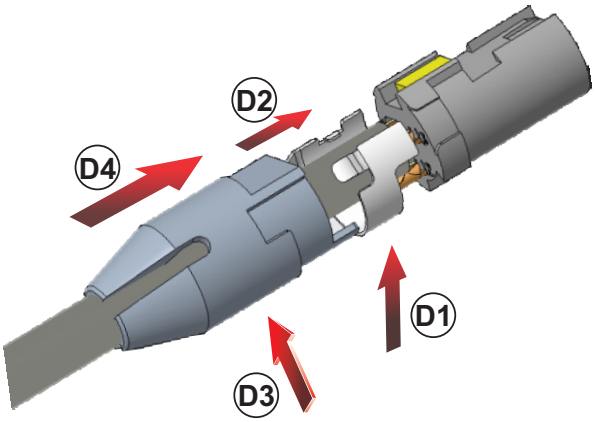


Ⓓ **Assemble ground contact and chuck.**

Ⓓ1 **Put the gound contact onto the cable.**

Ⓓ2 **Push the groud contact onto the plastic insert.**

Ⓓ3 **Put the chuck onto the cable.**

Ⓓ4 **Push the chuck onto the plastic insert.**

**Tiny XLR Cable Connectors:**
**Find more details on**
**www.rean-connectors.com**


| | | | | | | | |
|---|---|---|---|---|---|---|---|
| **Neutrik AG** | **LI** | T: +423 / 237 24 24 | F: +423/232 53 93 | **Neutrik France** | **FR** | T: +33 1/4131 6750 | F: +33 1/4131 0511 |
| **Neutrik USA Inc.** | **USA** | T: +1 704 / 972 3050 | F: +1 704/438 9202 | **Neutrik Tokyo Ltd.** | **JP** | T: +81 3/3663 4733 | F: +81 3/3663 4796 |
| **Neutrik (UK) Ltd.** | **UK** | T: +44 1983 / 811 441 | F: +44 1983/811 439 | **Neutrik Hong Kong Ltd.** | **HK** | T: +852/2687 6055 | F: +852/2687 6052 |
| **Neutrik Vertriebs GmbH** | **DE/NL/AT/DK** | T: +49 8131 / 280 890 | F: +49 8131/280 830 | **Neutrik Trading Ltd.** | **CN** | T: +0574/8825 0833 | F: +0574/8826 5000 |



**Draft. Nr.: NCN 008** | **Update: 2021-03-15** |


Data subject to change without prior notice. © 2021 REAN®. REAN® is registered trademark of Neutrik AG. ALL RIGHTS RESERVED.



Female housing for RT*FC

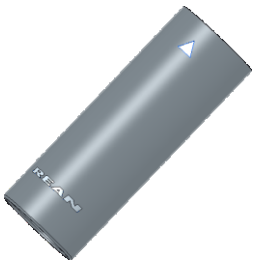

Male housing for RT*MC





**Attention: Grey chuck is for small diameter cable , bule chuck is for big diameter cable .**

Ⓔ

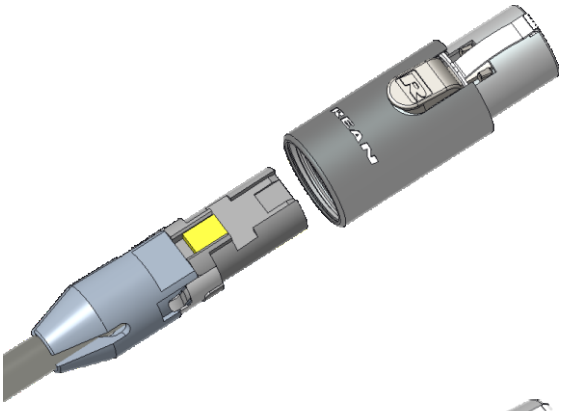

**ⒺSlide chuck and insert into the housing.**

Ⓕ



**ⒻFinish the assembly by turning the bushing onto the connector.**

Ⓖ

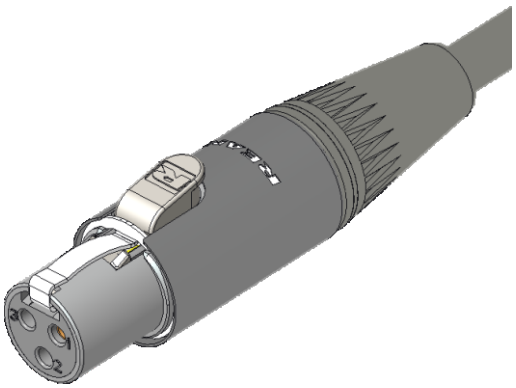

**ⒼFinish**

**Tiny XLR Cable Connectors:**
**Find more details on**
**www.rean-connectors.com**


| | | | | | | | |
|---|---|---|---|---|---|---|---|
| **Neutrik AG** | **LI** | T: +423 / 237 24 24 | F: +423/232 53 93 | **Neutrik France** | **FR** | T: +33 1/4131 6750 | F: +33 1/4131 0511 |
| **Neutrik USA Inc.** | **USA** | T: +1 704 / 972 3050 | F: +1 704/438 9202 | **Neutrik Tokyo Ltd.** | **JP** | T: +81 3/3663 4733 | F: +81 3/3663 4796 |
| **Neutrik (UK) Ltd.** | **UK** | T: +44 1983 / 811 441 | F: +44 1983/811 439 | **Neutrik Hong Kong Ltd.** | **HK** | T: +852/2687 6055 | F: +852/2687 6052 |
| **Neutrik Vertriebs GmbH** | **DE / NL / AT/DK** | T: +49 8131 / 280 890 | F: +49 8131/280 830 | **Neutrik Trading Ltd.** | **CN** | T: +0574/8825 0833 | F: +0574/8826 5000 |


**Draft. Nr.: NCN 008** | **Update: 2021-03-15** | Data subject to change without prior notice. © 2021 REAN®. REAN® is registered trademark of Neutrik AG. ALL RIGHTS RESERVED.