TECHNICAL SPECIFICATIONS

Steel .....1" x 2" — 16 Guage

Reading Surface ....Medium Oak — Standard
Also in Lt. Oak, Mahogany, Walnut or Gray

Base/Pole Color.....3 Mil Powdercoat Paint in Black;
Gray Pole with Gray Reading Surface

Knob .....Plastic with Nylon Stud

Glides .....4 Adjustable

Edge .....5/8" PVC T-Moulding

Dimensions.....Reading Surface 16"H x 20"W
Height Adjustable 30"— 44"H

Weight .....18 lbs. (Oversized Carton)

MANUFACTURER'S WARRANTY

Our Lecterns undergo the most rigid and exacting tests for superior quality and performance before leaving the factory. Oklahoma Sound Corporation warrants this product to be free from defective material and workmanship on the electronic product speakers and microphones for two years from the date of resale by an authorized Oklahoma Sound distributor. Oklahoma Sound will replace defective parts and repair malfunctioning products under this warranty when the defect occurs under normal installation and use, provided the unit is returned to our factory via prepaid transportation after direct authorization and approval by Oklahoma Sound. This warranty provides that examination of the returned product must disclose in our judgement, a manufacturing defect. This warranty does not extend to any product which has been subject to misuse, neglect, accident, improper installation, or where the serial number has been removed or defected and is given in lieu of any other warranty implied or expressed and will not cover any consequential damages.

For this and other OSC products/accessories, please contact your dealer, or:

OKLAHOMA SOUND CORP.
149 Entin Road, Clifton, NJ 07014
Tel: 973-594-9000• Fax: 973-594-9339
Web-Site www.oklahomasound.com • e-mail: info@oklahomasound.com

OKLAHOMA SOUND CORP.

Speaker Stand

INSTRUCTION MANUAL



MODEL #70

ASSEMBLY DIAGRAM

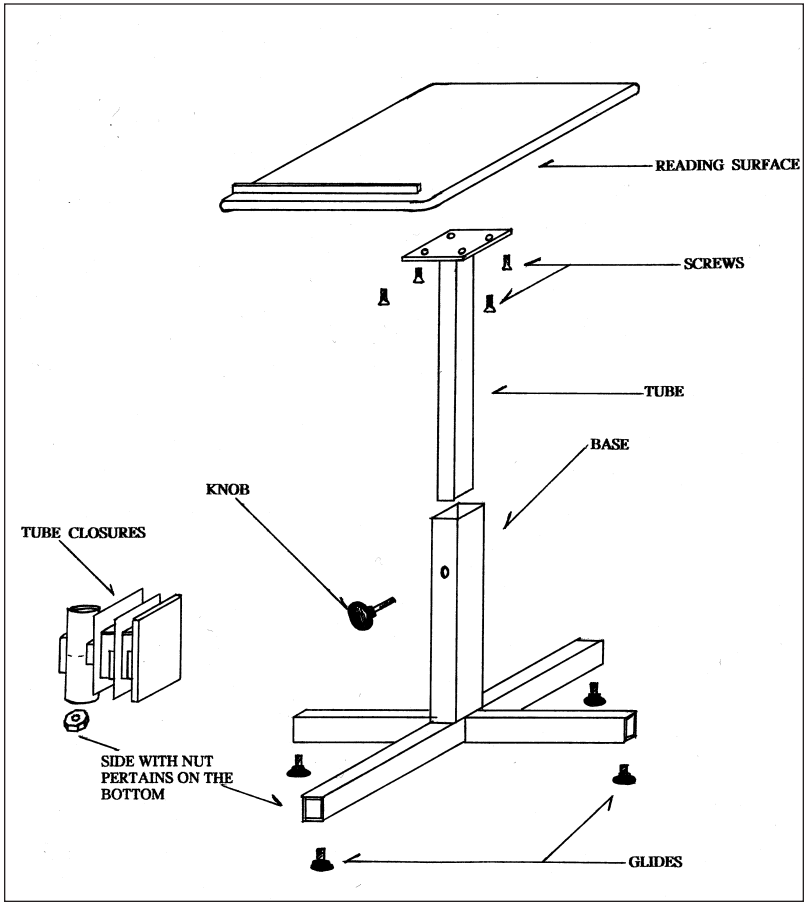

OPTIONAL EQUIPMENT

BRASS READING LAMP / #BRL

Attach an elegant brushed brass reading lamp to the reading table of your new Speaker Stand. Not only will you shed light on the subject, but you will add pizzaz to your new stand.



ASSEMBLY INSTRUCTIONS

Assembly Tips

All assembly should be done on a clean protected surface, such as carpet or the like. Assembly is easy and should take no more than 10 minutes.

Parts

(1) Base
(1) Tube with 5" x 5" Plate
(1) Reading Top Table
(4) Adjustable Glides
(1) Knob
(4) Screws
(4) Rectangular Tube Closures

Tools Required

Phillips-Head Screwdriver.

Assembling the Unit

1) Insert the 4 tube closures into the open ends of the 4 legs on the base. Make sure side with nut is on the bottom.
2) Screw the 4 adjustable glides into the corresponding holes on the bottom of the base..
3) Screw the knob into the hole near the top of the base. Do not let the screw part of the knob enter the tube yet, as this will obstruct the top from going in.
4) Place the reading table face down on a protected surface with the bookstop closest to you. The 4 drilled holes will now be visible.
5) Place the tube with the 5" x 5" plate on top of the underside of the reading table. The 4 holes in the table will match up to the 4 holes on the plate. The tube should be angled towards you.
6) Screw in the 4 screws into these holes.
7) Insert the tube into the base, with the knob on the base and the bookstop on the top, facing you.
8) Gently tighten knob for the desired height.