Ikegami

INSTRUCTIONS MANUAL

21.5 INCH LED CCTV MONITOR

Model ULE-217A



Please read this manual thoroughly before use, and keep it handy for future reference.

CONTENTS

SAFETY INSTRUCTION ..... 2 ~ 3

CAUTIONS 4

FCC RF INTERFERENCE STATEMENT 5

INSTALLATION 6

CONNECTING WITH EXTERNAL EQUIPMENT 7

REMOTE FUNCTIONS 8

CONTROLS AND FUNCTIONS ..... 9 ~ 16

MOUNTING GUIDE 17

D-SUB CONNECTOR PIN ASSIGNMENTS 18

POWER MANAGEMENT 19

SPECIFICATION 20

DIMENSION 21

TROUBLE SHOOTING GUIDE 22

This Monitor was
Manufactured by ISO 9001
Certified Factory

Important Safety Instruction

1. Read these instructions.
2. Keep these Instructions.
3. Heed all warnings.
4. Follow all instructions.
5. Do not use this apparatus near water.
6. Clean only with dry cloth.
7. Do not block any ventilation openings. Install in accordance with the manufacturer's instructions.
8. Do not install near any heat sources such as radiators, heat registers,stoves, or other apparatus (including amplifiers) that produce heat.
9. Do not defeat the safety purpose of the polarized or grounding-type plug.
   Apolarized plug has two blades with one wider than the other.
   Agrounding type plug has two blades and a third grounding prong.
   The wide blade or the third prong are provided for your safety.
   If the provided plug does not fit into your outlet, consult an electrician for replacement of the bsolete outlet.
10. Protect the power cord from being walked on or pinched particularly at plugs, convenience receptacles and the point where they exit from the apparatus.
11. Only use attachment/accessories specified by the manufacturer.
12. Use only with the cart, stand, tripod, bracket or table specified by the manufacturer or sold with the apparatus. When a cart is used, use caution when moving the cart/apparatus combination to avoid injury from tip-over.



13. Unplug this apparatus during lightning storms or when unused for long periods of time.
14. Refer all servicing to qualified service personnel. Servicing is required when the apparatus has been damaged in any way, such as power-supply cord or plug is damaged, liquid has been spilled or objects have fallen into the apparatus the apparatus has been exposed to rain or moisture does not operate normally or has been dropped.

SAFETY INSTRUCTION

- The apparatus shall not be exposed to dripping or splashing and that no objects filled with liquids, such as vases, shall be placed no the apparatus.

14 Minimum distances(e.g. 10cm) around the apparatus for sufficient ventilation.

“WARNING – To reduce the risk of fire or electric shock, do not expose the apparatus to rain or moisture.”

“The apparatus shall not be exposed to dripping or splashing and no objects filled with liquids, such as vases, shall be placed on the apparatus.”

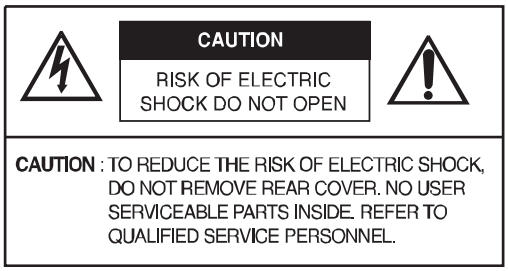



This symbol is intended to alert the user to the presence of uninsulated: dangerous voltage with in the product’s enclosure that may be of sufficient magnitude to constitute a risk of electric shock to persons.



This symbol is intended to alert the user to the presence of important operating and maintenance(servicing) instructions in the literature accompanying the appliance.

CAUTIONS

CAUTION

The power supply cord is used as the main disconnect device, ensure that the socket-outlet is located/installed near the equipment and is easily accessible.

ATTENTION

Le cordon d`alimentation est utillsé comme interrupteur général. La prise de courant doit être située ou installée à proximité du matériel et être facile d`accès

CAUTION TO SERVICE PERSONNEL

POWER SUPPLY CORD IS USED AS MAIN POWER DISCONNECT DEVICE IN THIS PRODUCT. UNPLUG THIS PRODUCT FROM THE WALL OUTLET BEFORE REMOVING THE BACK COVER AND SERVICING

EMISSION CHARACTERISTICS TESTED BY SEMKO

THIS PRODUCT HAS BEEN TESTED AND HAS SHOWN COMPLIANCE WITH THE NATIONAL SPECIFICATIONS SUCH AS SWEDISH MPR 1990.10.(MPR II)

▶ NEVER REMOVE THE BACK COVER

Removal of the back cover should be carried out only by qualified personnel.

▶ DO NOT USE IN HOSTILE ENVIRONMENTS

To prevent shock or fire hazard, do not expose the unit to rain or moisture.

This unit is designed to be used in the office or home. Do not subject the unit to vibrations, dust of corrosive gases.

▶ KEEP IN A WELL VENTILATED PLACE

Ventilation holes are provided on the cabinet to prevent the temperature from rising.

Do not cover the unit or place anything on the top of unit.

▶ AVOID HEAT

Avoid placing the unit in direct sunshine or near a heating appliance.

▶ TO ELIMINATE EYE FATIGUE

Do not use the unit against a bright back ground and where sunlight or other light sources will shine directly on the monitor.

▶ BE CAREFUL OF HEAVY OBJECT

Neither the monitor itself nor any other heavy object should rest on the power cord.

Damage to a power cord can cause fire or electrical shock.

FCC RF INTERFERENCE STATEMENT

NOTE

This equipment has been tested and found to comply with the limits for a Class A digital device, pursuant to Part 15 of the FCC Rules. These limits are designed to provide reasonable protection against harmful interference in a residential installation.

This equipment generates, uses and can radiate radio frequency energy and, if not installed and used in accordance with the instructions, may cause harmful interference to radio communications. However, there is no guarantee that interference will not occur in a particular installation.

If this equipment does cause harmful interference to radio or television reception which can be determined by turning the equipment off and on, the user is encouraged to try to correct the interference by one or more of the following measures.

- Reorient or relocate the receiving antenna.
- Increase the separation between the equipment and receiver.
- Connect the equipment into an outlet on a circuit different from that to which the receiver is connected.
- Consult the dealer or an experienced radio, TV technician for help.
- Only shielded interface cable should be used.

Finally, any changes or modifications to the equipment by the user not expressly approved by the grantee or manufacturer could void the users authority to operate such equipment.

▶ DOC COMPLIANCE NOTICE

This digital apparatus does not exceed the Class A limits for radio noise emissions from digital apparatus set out in the radio interference regulation of Canadian Department of communications.

INSTALLATION

Before setting up the monitor, ensure that the power to the monitor and other attached devices are turned off.

※ Notice: Stand & Screws are optional

A. Connecting the stand

1. Place the monitor with its front facing downward on a soft cloth.
2. Assemble the Stand Base into the Stand Body in the correct direction using the included screws in the accessory box.

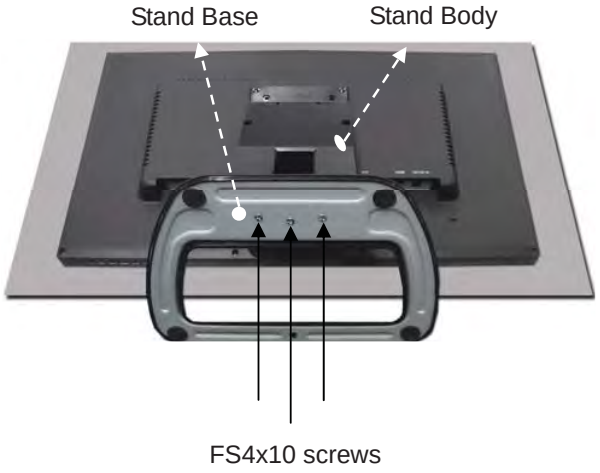

3. Once assembled take the monitor up carefully and face the front side.

B. Positioning your display

Adjust the position of the panel in various ways for maximum comfort. (Tilt Range: -3°~75°)

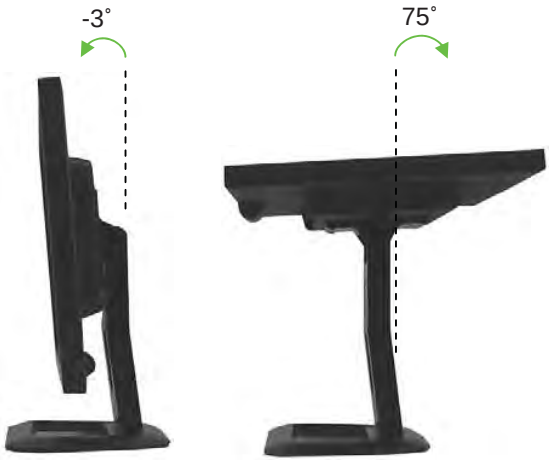

CONNECTING WITH EXTERNAL EQUIPMENT

Rear Connection

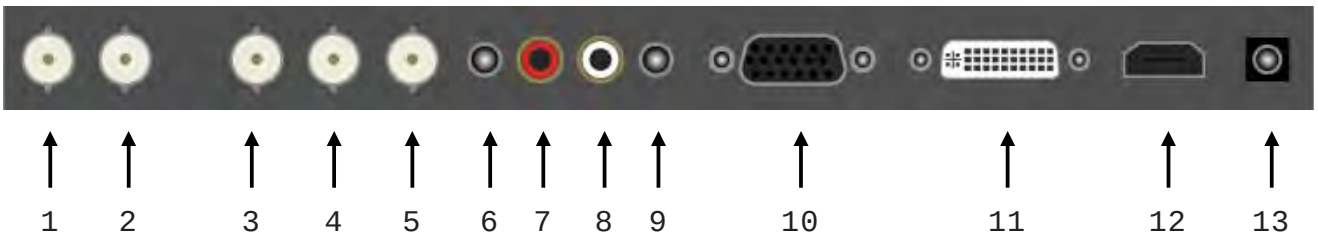

1. SDI OUT
2. SDI IN
3. AV2 IN
4. AV1 OUT
5. AV1 IN
6. TRIGGER IN

7 & 8. AUDIO R&L (AV1 & AV2)

9. PC STEREO IN (VGA & DVI)
10. VGA
11. DVI
12. HDMI
13. DC 12V

REMOTE FUNCTIONS

Remote Controller(Optional)

1. POWER(⏻)
Turns the power ON or OFF. There will be a few seconds delay before the display appears.
2. SOURCE
Selects an input source.
3. AUTO
Auto geometry adjustment in the RGB-PC source.
4. HOLD
Stops the Trigger & Auto switching functions.
5. MUTE
Mutes the sound.
6. MENU
Activates and exits the On Screen Display.
7. EXIT
Exits the On Screen Display.
8. VOL(◀ & ▶)
Increases or decreases the level of audio volume.
9. UP/DOWN
Moves upwards or downwards in the OSD menu.
10. ENTER
Enters an OSD submenu or accepts your selection.
11. INFO
Displays the information about input source.
12. STILL
Pauses the picture.
13. PIP (Picture In Picture)
Activates the PIP mode.
14. P.INPUT
Changes the source of sub-picture in the PIP mode.
15. P.POS
Changes the position of sub-picture in the PIP mode.
16. P.SIZE
Changes the sizes of sub and main pictures in the PIP mode.
17. SWAP
Alternates between sub and main pictures in the PIP mode.
18. ARC (Aspect Ratio Control)
Selects a screen ratio.
19. APC (Auto Picture Control)
Selects a picture mode.
20. ACC (Auto Color Control)
Selects a color mode.
21. S.SET
Selects the source of sound between main and sub pictures in the PIP mode.
22. PC
Selects PC mode(PC, DVI & HDMI).
23. AV
Selects AV mode(AV1 & AV2).
24. COMP
Selects Component mode(Unavailable).



CONTROLS AND FUNCTIONS

Bottom Key Control



1. SOURCE/⏎

Selects an input source.

Enters a submenu or accepts your selection in the OSD menu.

2. MENU

Activates or exits the OSD.

Moves previous menu or status in the OSD.

3 & 4. AUTO/▼ & ▲

Moves another option in the OSD.

The **AUTO/▼** button is auto adjustment function in the VGA input.

The up(▲) button is HOLD function and stop the Trigger & Auto switching functions.

5 & 6. ◄ VOL ►

Adjust the volume or menu settings.

7. ⏻/ I

Turns the power on or off. There will be a few seconds delay before the display appears.

8. LED

Turned on: Blue color.

Turned off: Red color.

9. IR Sensor

Remote controller sensor.

CONTROLS AND FUNCTIONS

OSD Menu Description

All picture, sound settings and setup for the monitor can be adjusted in the OSD menu.

(**O**n **S**creen **D**isplay)

To adjust the OSD screen:

1. Press the **MENU** button to enter the OSD menu.
2. Press the ▲/▼ buttons to select the desired option. The selected option is highlighted.
3. Press the ▶ button to enter the submenu for adjusting items.
4. Change the value you wish to adjust by using the ◀/▶ buttons.
5. Press the ◀ button to exit the submenu for adjusting items.
6. Press the **MENU** button to exit the OSD menu.

A. Custom

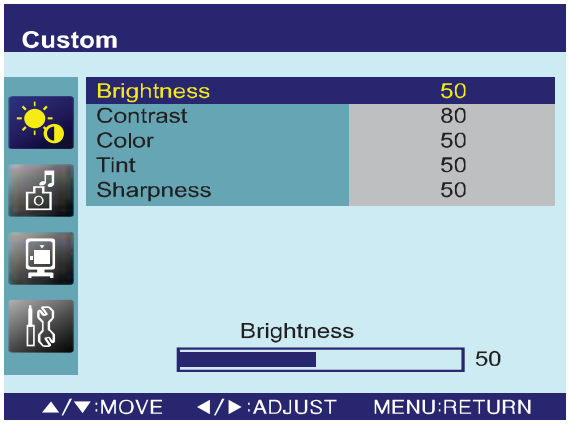

Option	Function	Value
Brightness	Adjusts brightness of the screen.	0 ~ 100
Contrast	Adjusts intensity of the image.	0 ~ 100
Color [1)]	Adjusts color of the picture.	0 ~ 100
Tint [1) 2)]	Adjusts tint of the picture.	0 ~ 100
Sharpness [1)]	Adjusts sharpness of the picture.	0 ~ 100

1) Unavailable in RGB-PC, DVI, HDMI and HD-SDI.

2) Unavailable in PAL system.

B. Picture/Sound

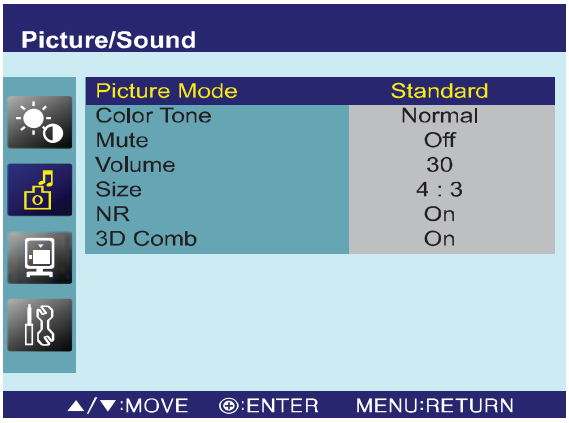

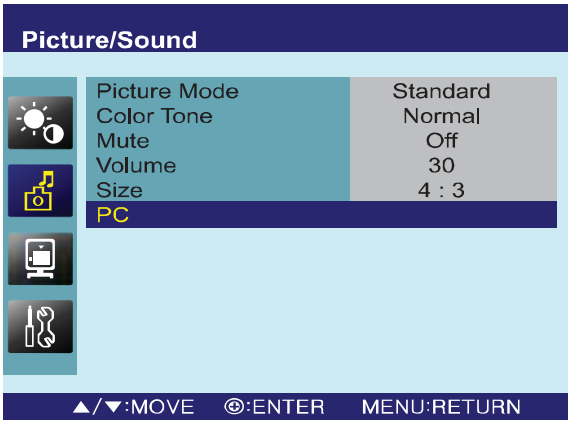

Option	Function	Value
Picture Mode	Sets picture mode.	See table below
Color Tone	Sets color tone.	See table below
Mute	Mutes speaker sound.	Off or On
Volume	Adjust the level of audio volume.	0 ~ 100
Size	Display picture size.	See table below
NR [1)]	Reduces noise of the picture.	On or Off
3D Comb [1)]	Activates the 3D comb filter.	On or Off
PC [2)]	See table below.	

1) Unavailable in RGB-PC, DVI, HDMI and HD-SDI.

2) Only available in RGB-PC.

Picture Mode

Custom	Applies user selected values.(Brightness, Contrast, Color, Tint and Sharpness)
Dynamic	Provides enhanced contrast and sharpness.
Standard	Provides standard contrast and sharpness.
Movie	Is recommended for viewing film-based content.
Mild	Reduces contras and sharpness.

Color Tone

Cool	Gives the white color a bluish tint.
Normal	Gives the white color a neutral tint.
Warm	Gives the white color a reddish tint.
User	To manually adjust the color tones(Red, Green, and Blue).

Size

4:3	Sets the image size to 4:3
Panorama [1)]	Sets the image to panorama
Zoom1 [1)]	Expands the image size about two times to upward and downward
Zoom2 [1)]	Expands the image size about one and half times to upward and downward
Wide	Sets the image size to wide
Under [2)]	Adjusts the image size to display resolution without overscan
1:1 [1)]	Adjusts the image size to input resolution with overscan

1) Unavailable in RGB PC, DVI, HDMI and HD-SDI.

2) Unavailable in RGB PC.

PC

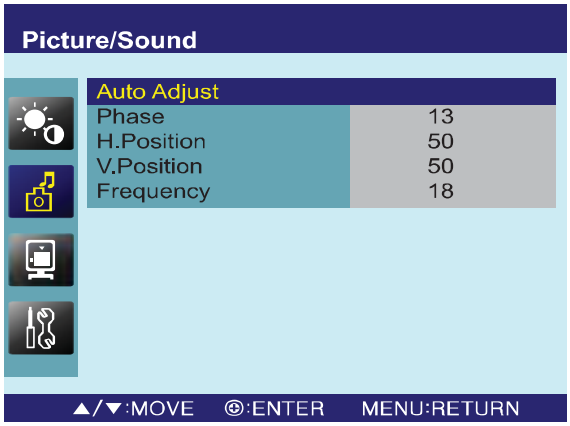

Option	Function	Value
Auto Adjust	Auto geometry adjustment.	
Phase	Adjusts the number of horizontal picture elements.	0 ~ 100
H-Position	Adjusts the horizontally picture position.	0 ~ 100
V-Position	Adjusts the vertically picture position.	0 ~ 100
Frequency	Adjusts the vertical noise of screen image.	0 ~ 100

C. PIP

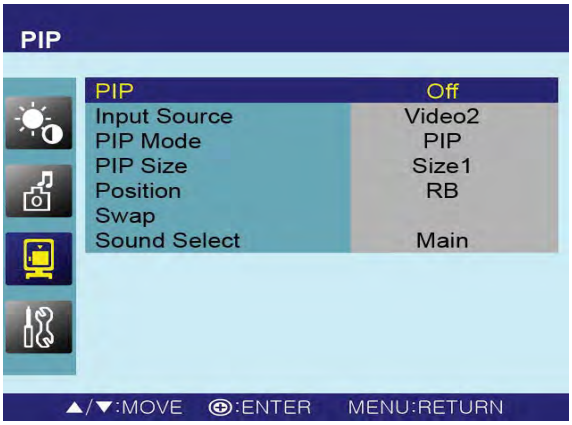

Option	Function	Value
PIP	Activates the PIP feature.	Off or On
Input Source	Selects the input source for the PIP area.	See table below
PIP Mode	Enables 3 screen size.4:3 side by corner, 4:3 side by 4: 3, and full screen side by side.	PIP, PBP1 or PBP2
PIP Size	Selects the size of PIP screen.	Size1, Size2 or Size3
Position	Selects the position of PIP screen. **R**ight of **B**ottom, **L**eft of **B**ottom, **L**eft of **T**op and **R**ight of **T**op.	RB, LB, LT or RT
Swap	Alternates between the main and sub picture	
Sound Select	Selects the sound source from either the Main or PIP	Main or Sub

Input Source

	Main	Sub
Available combination	AV1 or AV2	AV1 or AV2
	AV1 or AV2	RGB-PC, DVI, HDMI or HD-SDI
	RGB-PC, DVI, HDMI or HD-SDI	AV1 or AV2
Unavailable combination	RGB-PC, DVI, HDMI or HD-SDI	RGB-PC, DVI, HDMI or HD-SDI

D. Setup

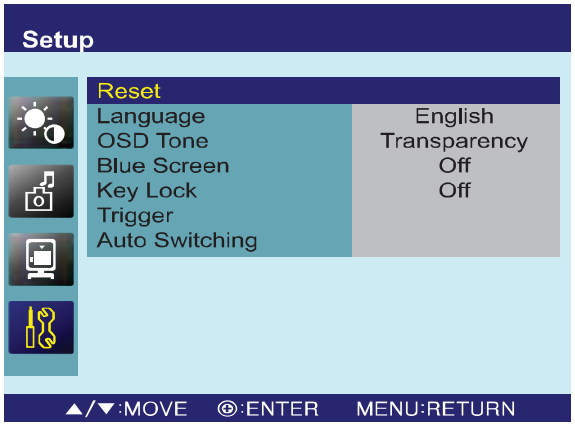

Option	Function	Value
Reset	Resets the monitor settings to the factory default.	
Language	Sets the language of the OSD menu.	English, French, Deutsch, Italian, Spanish, Portuguese or Nederland
OSD Tone	Changes background of monitor menus. (e.g. input source & information)	Transparency or On
Blue Screen	Displays a blue screen if the monitor receives no signal.	Off or On
Key Lock [1)]	Locks all buttons of the monitor. **Note**: Use remote controller to unlock.	Off or On
Trigger	See table below	
Auto Switching	See table below	

1) How to unlock

① On the front key: Press the MENU and ▲ button at the same time over 3 seconds.

② On the Remote Controller: The Remote Controller operates well because the Key Lock function is only allowed for the front key of this product.

Trigger

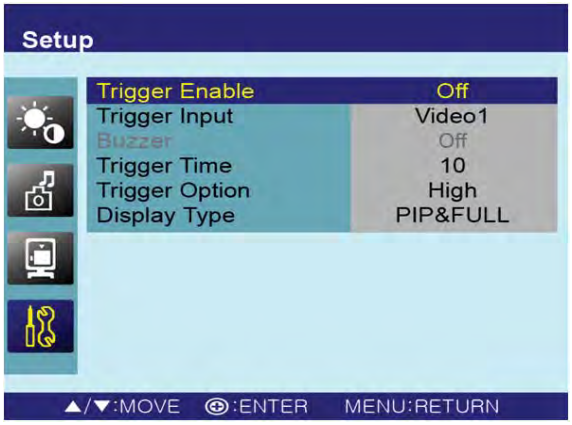

Option	Function	Value
Trigger Enable	Activates the trigger feature.	Off or On
Trigger Input	Selects the input source for the Trigger.	AV1, AV2, RGB-PC, DVI, HDMI or HD-SDI
Buzzer	Inactivated.	
Trigger Time	Selects the amount of time, in seconds, that the monitor displays the trigger Input image.	3 ~ 100
Trigger Option	Selects the type of physical trigger input.	See table below.
Display Type	Selects the mode in which the monitor displays the Trigger Input. The monitor takes one of the following actions: - PIP & FULL: Displays the Trigger Input in the PIP of the current video input source. **Note**: The main video source must support the Trigger Input source as a PIP option. See section "**Input Source**" in "**C. PIP**". - FULL: Switches the display to show the Trigger Input in the full screen.	PIP & FULL or FULL

CONTROLS AND FUNCTIONS

N/C(**N**ormally **C**losed): The Trigger function is activated when the trigger cable is opened.	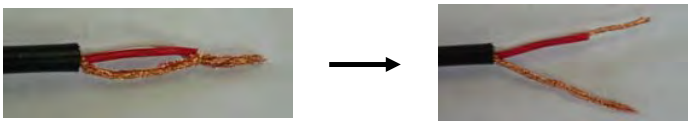
N/O(**N**ormally **O**pened): The Trigger function is activated when the trigger cable is closed.	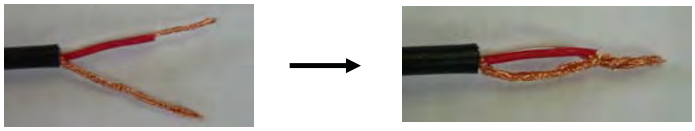
High: The Trigger function is activated when the trigger signal is DC 2~5[V].	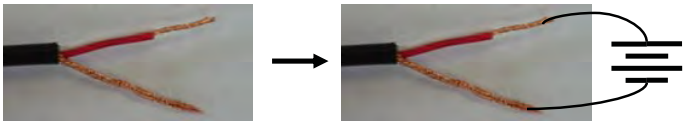
Low: The Trigger function is activated when the trigger signal is DC 0~0.6[V]. **Note**: In this case, trigger port has high status electrically, so the trigger cable has to have ground(or earth) status to be activated.	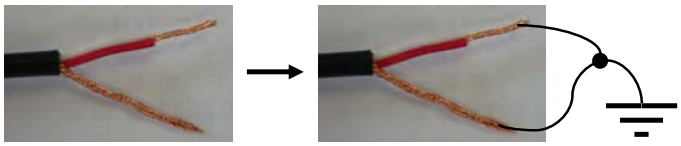

Auto Switching

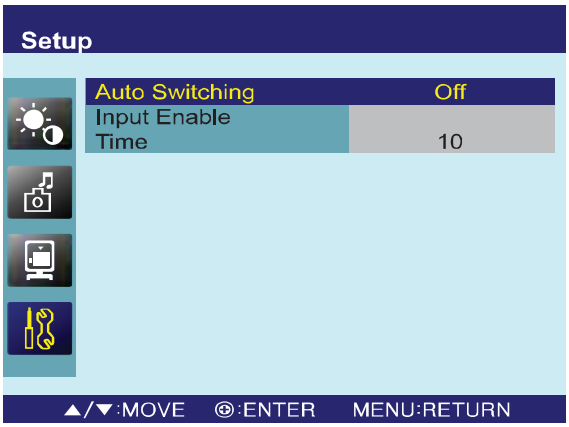

Option	Function	Value
Auto Switching	Activates the Auto Switching feature.	Off or On
Input Enable	Opens another menu and you can select the input sources to include in the Auto Switching cycle.	AV1, AV2, RGB-PC, DVI, HDMI and HD-SDI
Time	Selects the amount of time, in seconds, that the monitor displays each selected input source.	3 ~ 100

MOUNTING GUIDE

Wall mounting (Optional)

The LCD monitor is suitable for wall mounting by using the VESA 100 standard wall mount (not included in the delivery).

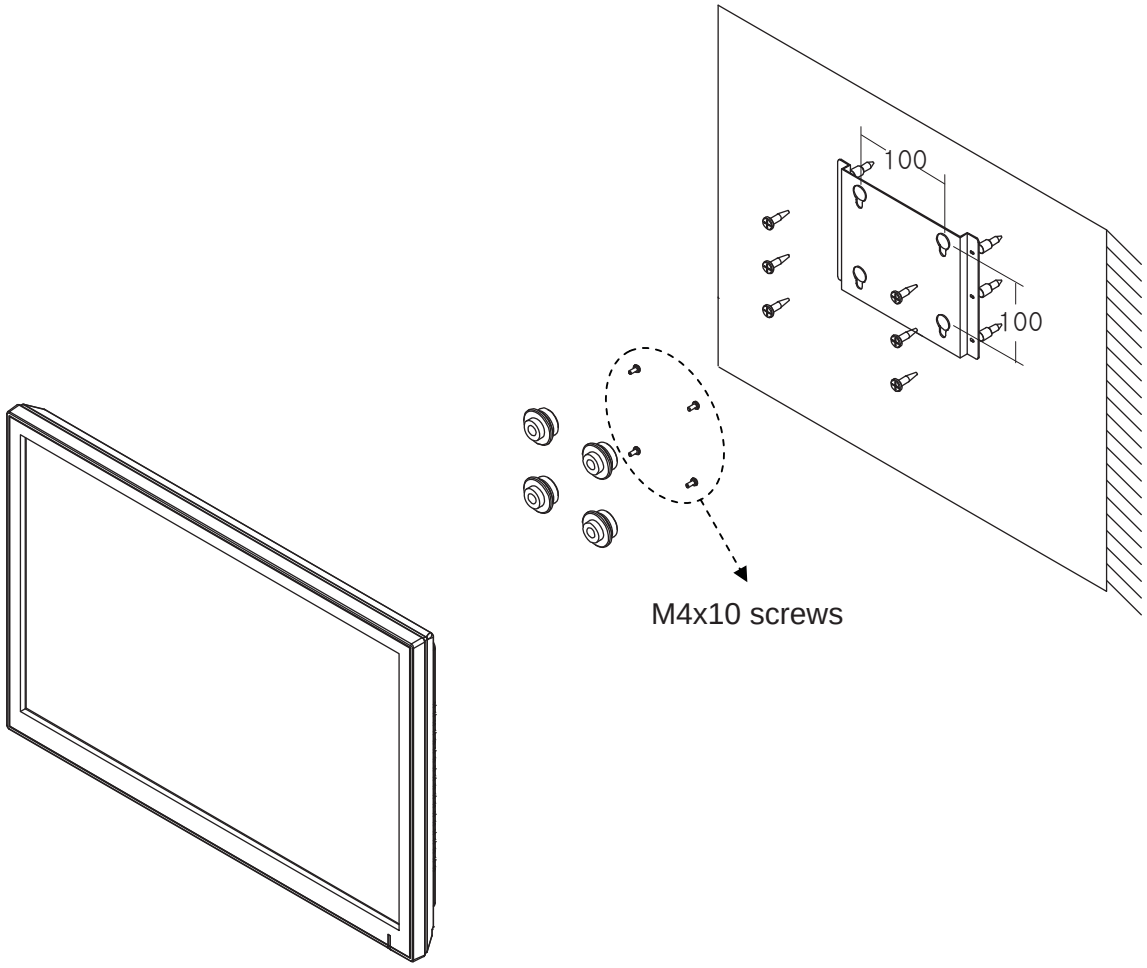

※ Attention!

You must use four M4x10 screws to assemble this monitor and the wall mount bracket.

※ WARNING!

If user use longer than M4x10mm, it may cause the damage on the unit.

Please follow instructed bolt size & length.

D-SUB CONNECTOR PIN ASSIGNMENTS

▶ **Pin Assignments**

Pin 1	RED VIDEO	9	
2	GREEN VIDEO	10	SIGNAL CABLE DETECT
3	BLUE VIDEO	11	GROUND
4	GROUND	12	SDA(for DDC)
5	GROUND	13	H-SYNC.(or H+V SYNC.)
6	RED GROUND	14	V-SYNC.
7	GREEN GROUND	15	SCL(for DDC)
8	BLUE GROUND		

D-SUB

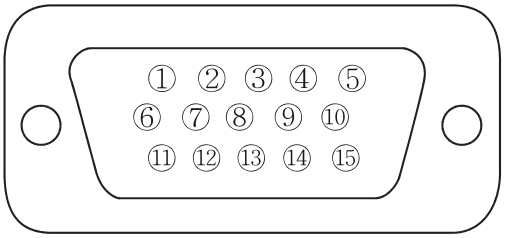

▶ **Accessories**

1. Power cord.
2. Power adaptor
3. User manual.
4. VGA(RGB-PC) cable.
5. Stand base & FS4x10 screws 3EA.
6. Trigger cable (Optional)
7. Stereo cable (Optional).
8. Remote controller (Optional).
9. Batteries (Optional).
10. Wall mount (Optional).

POWER MANAGEMENT

Power Consumption

Mode	Power Consumption
Turned On	< 21.6W
Turned Off	< 1W

LED Indicator

The power management feature of the monitor is comprised of two stages: Turned on(blue) and turned off(red).

Mode	LED	Monitor Operation
Turned On	Blue	Normal Operation
Turned Off	Red	Not Operation

SPECIFICATIONS

	21.5”
LCD-Type	21.5″ Diagonal AM-TFT(Active-Matrix)
	Pixel pitch(mm): 0.24825(H) x 0.24825(V)
	Brightness: 250cd/m² (Typical)
	Contrast ratio: 1000:1 (Typical)
	Viewing angle: 170°/160°(H/V)
	Response time: 5ms (Typ., on/off)
RESOLUTION (H x V)	1920X1080@60Hz
FREQUENCY	Horizontal: 31~80kHz, Vertical: 56~75Hz
INPUT SIGNAL	VIDEO (2ch input 1.0Vp-p, 75Ω terminated, 1ch loop-through out)
	HDMI (High Definition Multimedia Interface)
	DVI (Digital Video Interface)
	VGA (RGB-PC)
	PC Stereo In.
	AV(composite) Sound R & L
	3G/HD/SD-SDI (BNC, 75ohm, 1ch input / 1ch loop-through out)
ACTIVE SCREEN SIZE	476.64mm x 268.11mm
PACKING DIMENSIONS (W x H x D)	580mm x 440mm x 145mm (22.83” x 17.32” x 5.71”)
WEIGHT	Net: 5.42Kg (11.95 lbs)
	Gross: 7.22Kg (15.92 lbs)
ELECTRICAL RATINGS	12V ⎓ 1.8A (100-240V~, 50/60Hz)

*** SDI Support Mode Table**

SDI		Support Resolution
Input / Loop through	3G	1080P (60/59.94/50)
	HD	1080i (60/59.94/50)
		1080p (30/29.97/25/24/23.98)
		720p (60/59.94/50)
	SD	480i (59.94)
		576i (50)

▶▶ **NOTE :** Technical specifications are subject to change without notice.

DIMENSION

(Unit: mm)

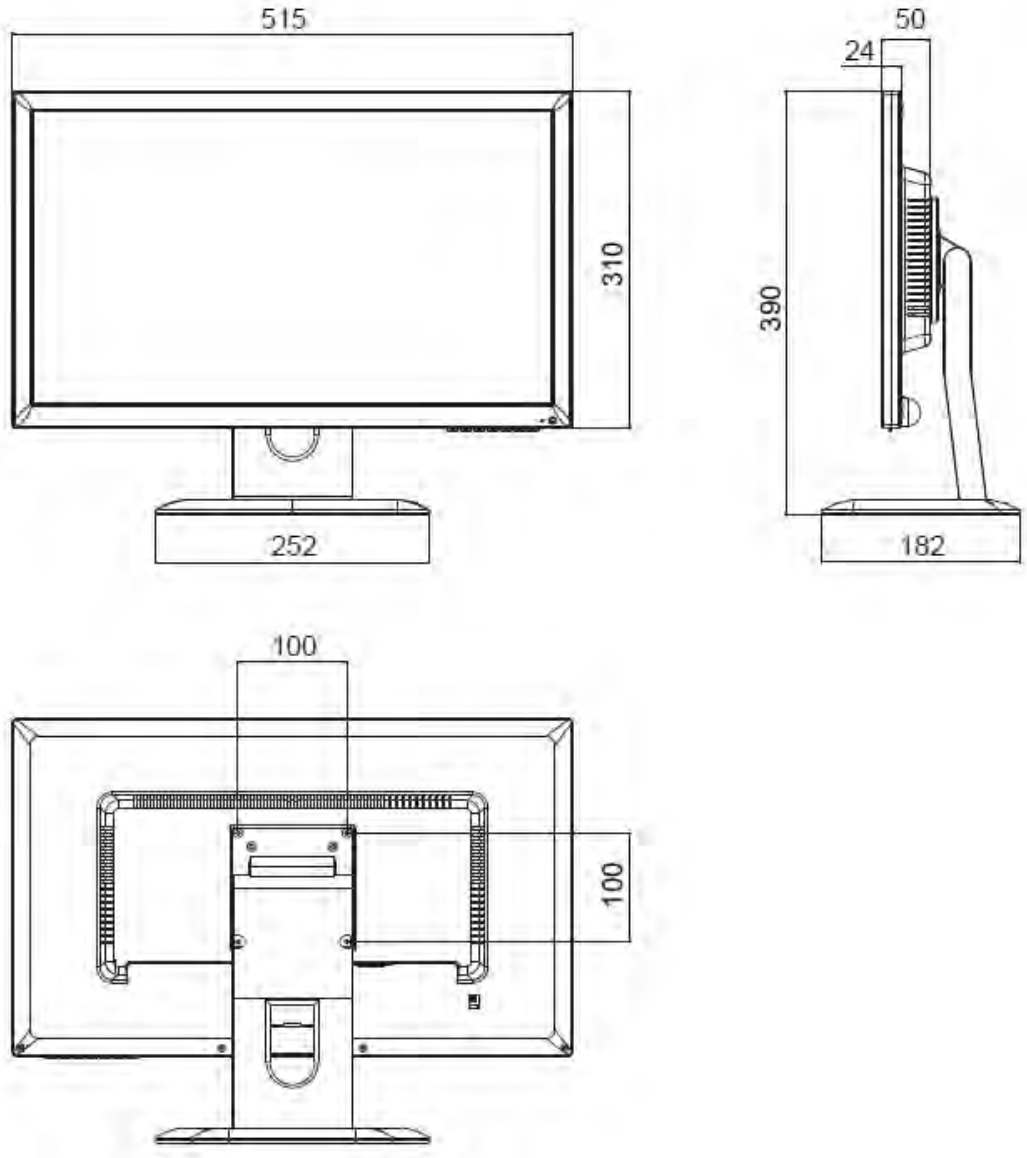

TROUBLESHOOTING GUIDE

TROUBLE	TROUBLESHOOTING TIP
No image on display screen	1. Check that power cord of the Monitor have been connected securely into wall outlet or grounded extension cable or strip. 2. Power switch should be in the ON position and LED is lit. 3. Check that the Brightness and/or the Contrast adjustments of the Display have not been turned down to minimum levels.
"NO SIGNAL" message on screen	1. The signal cable should be completely connected to the video card/computer. 2. The video card should be completely seated in its slot and the computer is switched ON.
Display image is not centered, too small or too large in PC mode	Push the down key in front side or Auto key in remote controller.
Vertical or Horizontal noise is present in the picture	Adjust Clock and Phase in the OSD.

WEEE Symbols

Correct Disposal of This Product (Waste Electrical & Electronic Equipment)
(Applicable in the European Union and other European countries with separate collection systems)

This marking shown on the product or its literature, indicates that it should not be disposed with other household wastes at the end of its working life. To prevent possible harm to the environment or human health from uncontrolled waste disposal, please separate this from other types of wastes and recycle it responsibly to promote the sustainable reuse of material resources. Household users should contact either the retailer where they purchased this product, or their local government office, for details of where and how they can take this item for environmentally safe recycling. Business users should contact their supplier and check the terms and conditions of the purchase contract. This product should not be mixed with other commercial wastes for disposal.



MEMO

MEMO

Ikegami

Ikegami Tsushinki Co., Ltd.

5-6-16, Ikegami, Ohta-ku, Tokyo, Japan 146-8567

Phone:(03)5700-1111 Fax:(03)5700-1137

Ikegami Electronics (U.S.A.), Inc.

300E State Route 17S, Mahwah, NJ 07430 USA

Phone:(201)368-9171, Fax:(201)569-1626

Ikegami Electronics (Europe) GmbH

Ikegami Strasse 1, D-41460 Neuss, Germany

Phone:(02131)123-0, Fax:(02131)102820

Property of

L39ME0333 Rev.0