4 & 6 SECTION / CARBON FIBER MONOPODS

VANTAGE SERIES 3

ROBUS™

Securing a Camera/Lens or Head

Determine which side of the mounting screw you will need to use for your camera, lens or head and follow the instructions from Reversing the Mounting Screw.

1. Attach your camera, lens, or head to the mounting screw, and make sure it's securely seated and flush with the baseplate.
2. Use the included 2.5 mm hex key to tighten the set screw from the bottom of the baseplate and secure your camera, lens, or head.

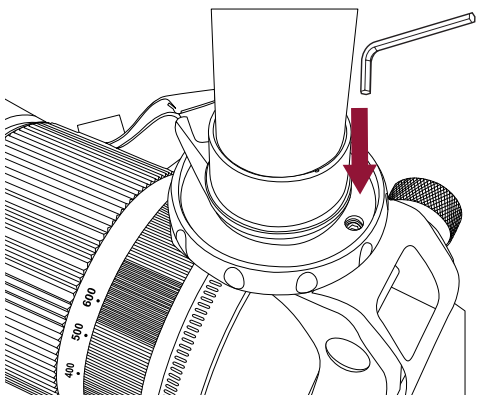

Extending the Monopod

Turn each twist-lock clockwise and extend each leg section to the desired length. Turn the twist-locks counterclockwise to tighten.

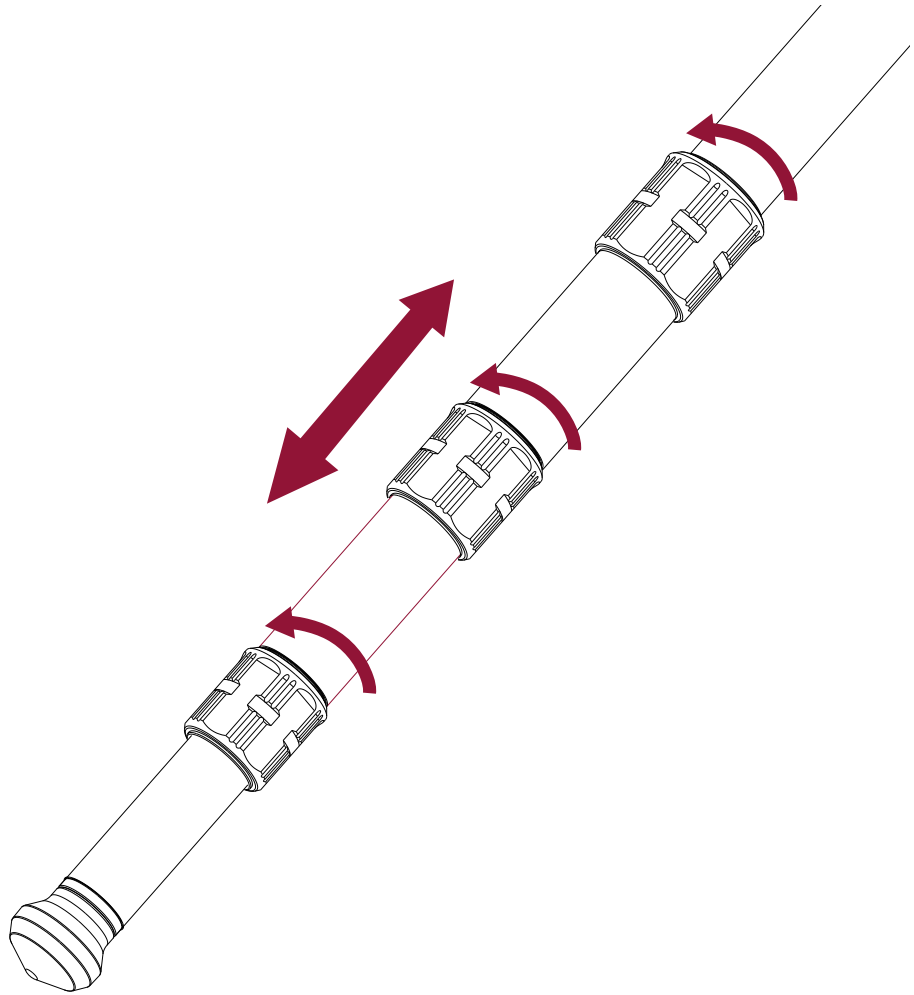

Swapping the Feet

The monopod comes with a rubber and a spike foot. To swap the feet, unscrew the rubber foot, and screw in the spike.

Use one of the included hex keys to tighten or loosen the spike foot.

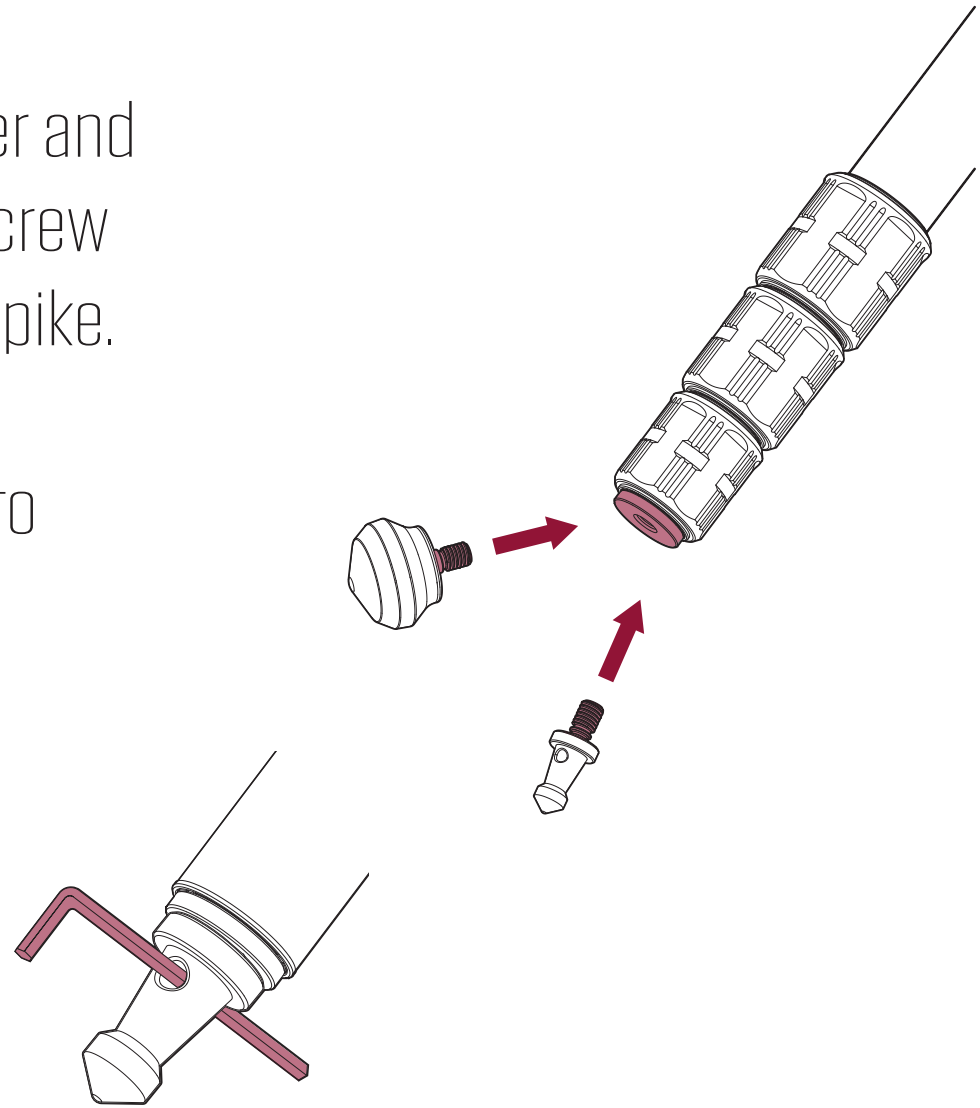

Wrist Strap and Belt Clip

Use the wrist strap to further stabilize and secure the monopod in your hand.

The integrated belt clip attaches the monopod to your waist for hands-free transport.

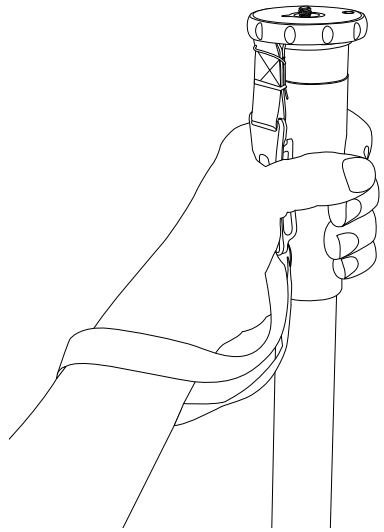

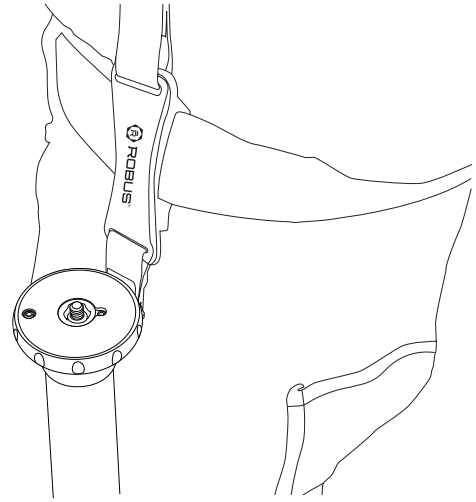

Reversing the Mounting Screw

The monopod offers a reversible 3/8-16 and 1/4-20 mounting screw.

1. Loosen the set screw with the included 2 mm hex key.
2. Unscrew the baseplate until you can remove the mounting screw and switch it to the other side.
3. Screw the baseplate back onto the monopod until it's secure, and tighten the set screw from the top.

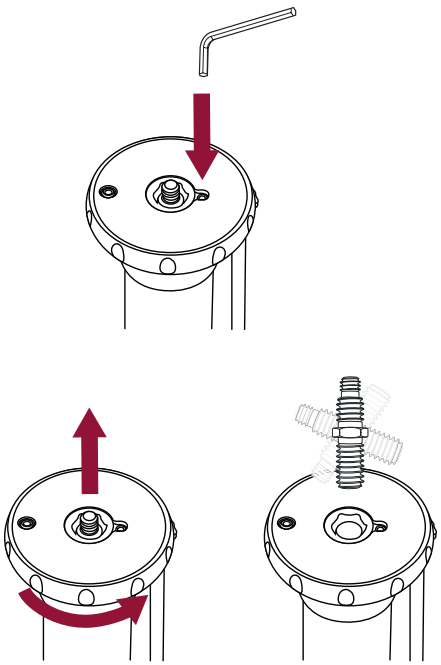

Specifications

	RCM-633	RCM-439
Maximum Load	33 lb. (15 kg)	39 lb. (17.7 kg)
Maximum Height	65 in. (165 cm)	65 in. (165 cm)
Folded Length	17.2 in. (43.7 cm)	21.1 in. (53.6 cm)
Leg Sections	6	4
Weight	1.1 lb. (0.5 kg)	1.1 lb. (0.5 kg)

Included hex keys: 2 and 2.5 mm

Ten-Year Limited Warranty

This Robus product is warranted to the original purchaser to be free from defects in materials and workmanship under normal consumer use for a period of ten (10) years from the original purchase date or thirty (30) days after replacement, whichever occurs later. The warranty provider's responsibility with respect to this limited warranty shall be limited solely to repair or replacement, at the provider's discretion, of any product that fails during normal use of this product in its intended manner and in its intended environment. Inoperability of the product or part(s) shall be determined by the warranty provider. If the product has been discontinued, the warranty provider reserves the right to replace it with a model of equivalent quality and function.

This warranty does not cover damage or defect caused by misuse, neglect, accident, alteration, abuse, improper installation or maintenance. EXCEPT AS PROVIDED HEREIN, THE WARRANTY PROVIDER MAKES NEITHER ANY EXPRESS WARRANTIES NOR ANY IMPLIED WARRANTIES, INCLUDING BUT NOT LIMITED TO ANY IMPLIED WARRANTY OF MERCHANTABILITY OR FITNESS FOR A PARTICULAR PURPOSE. This warranty provides you with specific legal rights, and you may also have additional rights that vary from state to state.

To obtain warranty coverage, contact the Robus Customer Service Department to obtain a return merchandise authorization ("RMA") number, and return the defective product to Robus along with the RMA number and proof of purchase. Shipment of the defective product is at the purchaser's own risk and expense.

For more information or to arrange service, visit www.robussupports.com or call Customer Service at 212-594-2353.

ROBUS™
A **Gradus Group** Brand

Product warranty provided by the Gradus Group. www.gradusgroup.com

Robus is a registered trademark of the Gradus Group. © 2019 Gradus Group LLC. All Rights Reserved.

Images are for illustrative purposes only.