ORC-TIMP-3C

TRAVEL CASE **FOR TIMPANI 3-LIGHT KIT**

Thank you for choosing Luxli.

The Luxli ORC-TIMP-3C case is designed to carry three Luxli Timpani lights along with accessories such as cables and power adapters. It will also accommodate most 1×1 lights. Its lightweight yet rugged construction offers reinforced, padded protection from impacts and the elements when transporting your lights to a location shoot.

The case is designed with removable reinforced dividers, so you can customize the case to your specific travel or storage needs. The reinforced top features a three-sided zipper for quick and easy access to your gear. A durable, weather-resistant nylon case protects the internal compartment from dirt, dust, and harsh weather. Rubber feet keep the case slightly above the ground in case of wet conditions. For security, the double zipper enclosure includes interlocking loops for a padlock.

Precautions

- Please read and follow these instructions, and keep this manual in a safe place.
- Clean the unit with only a soft, dry cloth.
- Make sure the item is intact, and that there are no missing parts.
- Exercise caution when using this product with the maximum load capacity.
- All images are for illustrative purposes only.

Contents Include

- Nylon shell
- L dividers (×2)
- Short dividers (×2)
- Long fabric divider
- Long dividers (×2)
- Cushions (×6)
- Shoulder strap

Specifications

Carrying/Transport Options	Grab handles, strap handles, shoulder strap
Interior Dimensions (H × W × D)	16.5 × 14.5 × 15 in. (41.9 × 36.8 × 38.1 cm)
Exterior Dimensions (H × W × D)	18 × 16.5 × 15.5 in. (45.7 × 41.9 × 39.4 cm)
Interior Material	Nylon, flannelette
Exterior Material	Nylon
Type of Closure	Double interlocking zipper accepts a padlock
Load Capacity	35 lb. (15.9 kg)
Weight	8.2 lb. (3.7 kg)

Assembling the Case

1. Unfold the shell, and place it on a flat surface.

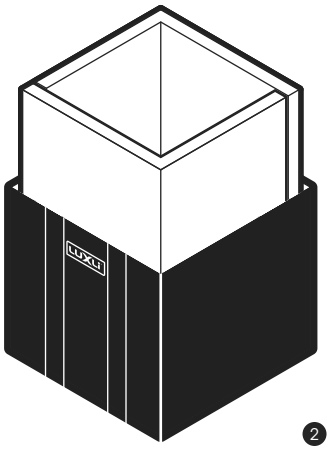

2

2. Identify the long side of each L divider. The long side of each L divider will form the left and right sides of the case. Insert and connect the L dividers into the case.

3. Press the sides of the L dividers to the touch-connect strips that line the top edge of the shell.

   Important! *Make sure that each side is snugly seated into the edges and corners of the shell. Make sure the zipper lip of the case is above the edge of the L dividers.*

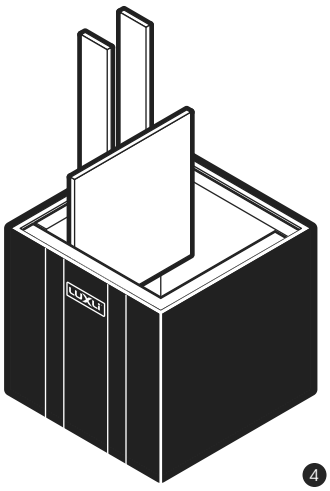

4

4. Insert the short dividers, and then insert the long fabric-covered divider.

   Tip: The short dividers will help you judge where to insert the fabric-covered long divider. If you don't need three separate compartments, space the short dividers according to your storage needs.

5. Insert the cushions and long dividers.

   Tip: Position the cushions with the short side at the top and bottom, and use the cushions as spacers for the long dividers.

6. Place the Timpani lights upside down into each section. The knobs or tilt lock handle should rest on the cushions.

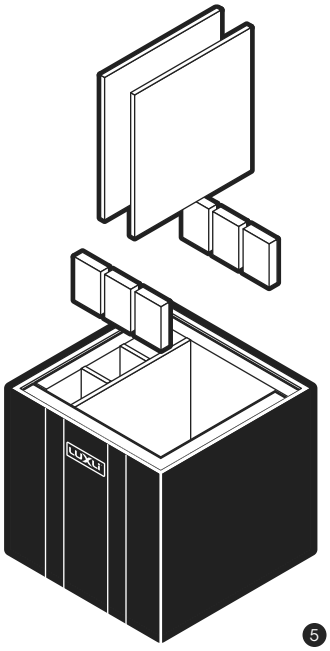

5

Important! *Before zipping up the case, make sure that the light fixtures are secure and that they fit inside their compartments. If one of the fixtures has too much room, reposition the long divider to assure a snug fit.*

One-Year Limited Warranty

This LUXLI product is warranted to the original purchaser to be free from defects in materials and workmanship under normal consumer use for a period of one (1) year from the original purchase date or thirty (30) days after replacement, whichever occurs later. The warranty provider's responsibility with respect to this limited warranty shall be limited solely to repair or replacement, at the provider's discretion, of any product that fails during normal use of this product in its intended manner and in its intended environment. Inoperability of the product or part(s) shall be determined by the warranty provider. If the product has been discontinued, the warranty provider reserves the right to replace it with a model of equivalent quality and function.

This warranty does not cover damage or defect caused by misuse, neglect, accident, alteration, abuse, improper installation or maintenance. EXCEPT AS PROVIDED HEREIN, THE WARRANTY PROVIDER MAKES NEITHER ANY EXPRESS WARRANTIES NOR ANY IMPLIED WARRANTIES, INCLUDING BUT NOT LIMITED TO ANY IMPLIED WARRANTY OF MERCHANTABILITY OR FITNESS FOR A PARTICULAR PURPOSE. This warranty provides you with specific legal rights, and you may also have additional rights that vary from state to state.

To obtain warranty coverage, contact the Luxli Customer Service Department to obtain a return merchandise authorization ("RMA") number, and return the defective product to Luxli along with the RMA number and proof of purchase. Shipment of the defective product is at the purchaser's own risk and expense.

For more information or to arrange service, visit www.luxlilight.com or call Customer Service at 212-594-2353.

Product warranty provided by the Gradus Group.

www.gradusgroup.com

LUXLI is a registered trademark of the Gradus Group.
© 2019 Gradus Group LLC. All Rights Reserved.

LUXLI®
A Gradus Group Brand

ORCHESTRA
MULTICOLOR LED **SERIES**