GABOR®

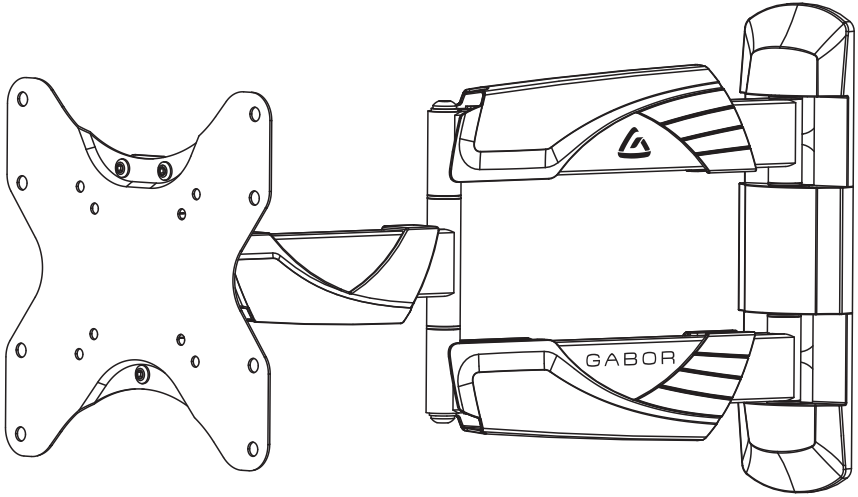

FSM-S / FULL SWING

MOUNT

for Small Flat-Panel Displays

User Manual

Thank you for choosing Gabor.

This Gabor Full-Swing Wall Mount offers flexible mounting and customizable viewing angles for wall-mounted TVs and monitors. It accommodates flat-panel displays with screen sizes measuring 20 to 45 inches. The sturdy steel construction supports a maximum weight of 77 pounds. The mount offers post-installation adjustments for tilt, swivel, pan, screen depth, and horizontal level—so you can easily set up and comfortably view your display.

If you have safety concerns about installing this product, contact a qualified professional or installation contractor.
If this product is missing hardware or there are defective parts, visit www.madebygabor.com or call Customer Service at 212-594-2353.

Safety Warnings

- When installing this product, be sure to refer to the mounting instructions detailed in this manual; failure to abide by the mounting instructions may void the product's warranty.
- Do not use this product for any flat-panel display other than what it is intended for; the exact specification, size parameters, and weight limits are found both on the product box and in the instruction manual.
- It is strongly recommended that this product be installed by a qualified professional or installation contractor; Gabor takes no responsibility for any product damage or personal injury resulting from mishandling, incorrect mounting, faulty assembly, or improper use of this product.
- This product has been designed specifically for mounting directly on wooden studs or concrete walls; depending on wall type and material, the use of additional appropriate mounting hardware and/or accessories such as heavy-duty anchors may be required.
- The supplied mounting hardware is not intended for use on metal studs or cinder block walls, and may not be appropriate for old or weak walls; it is best to consult with a qualified professional to determine whether your wall is capable of supporting this bracket.
- Do not mount the device on structures that may be affected by vibrations or noticeable impacts; do not install near a heater, fireplace, or any other source of direct heat energy.
- It is recommended that at least 2 people perform the installation process to prevent injury from mishandling or dropping the product and/or flat-screen device.
- This product may contain small parts which can possibly pose a choking hazard; keep out of reach of children and pets.
- Excessive exposure to liquids may damage the finish of this product; when cleaning this product, use only a mild detergent solution, and quickly wipe dry with a soft cloth.
- All images are for illustrative purposes only.

Product Specifications

Depth from Mounting Source
1.8 to 20 in. (4.6 to 50.8 cm)

Recommended Screen Sizes
20 to 45 in. (50.8 to 114.3 cm)

VESA Mounting Patterns
75×75 mm
100×100 mm
200×100 mm
200×200 mm

Max Weight Capacity
77 lb. (34.9 kg)

Material
Steel

Weight
7.1 lb. (3.24 kg)

Overview

Wall bracket

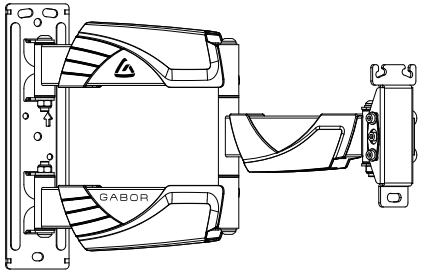

Display mounting plate

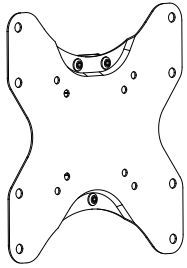

A 4X	**B** 4X	**C** 4X	**D** 4X	**E** 4X	**F** 4X	**G** 8X	**H** 4X
							
M4 × 14 mm screws	M5 × 14 mm screws	M6 × 14 mm screws	M8 × 20 mm screws	D5 washers	D8 washers	Spacers	Anchor screws
I 4X	**J** 4X	**K** 1X	**L** 2X	**M** 1X	**N** 1X	**O** 1X	
		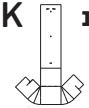					
Concrete anchors	Anchor screw washers	Wall bracket template	End cover	Hex wrench	Double box-end hex wrench	Bubble level	

Required Tools

Drill 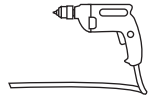

Phillips screwdriver 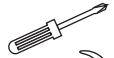

Hammer 

Stud finder 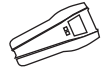

Tape measure 

3/16 in. (4.5 mm) Wood drill bit

3/8 in. (10 mm) Concrete drill bit 

Pencil 

Display/TV Placement

Before installing the Gabor Full Swing Mount, you will need to determine the placement of your display and identify surrounding support structures for attachment.

The best height for a display is at the viewer's eye level. You can find this height in one of two ways.

1. Measure the distance from the seating area to the viewing area. The ideal position is when the center of the display (where the diagonals meet) is as close as possible to eye level.

OR

2. Cut a piece of sturdy cardboard that's approximately the same size as your display. Use the cardboard to find a comfortable height, and mark the mounting location with a pencil.

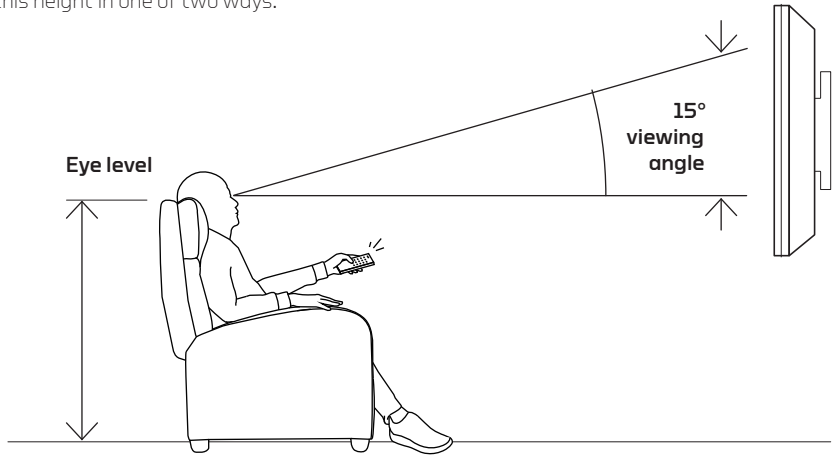

Preparing the Wall Bracket

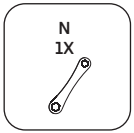

Remove the Center Cover

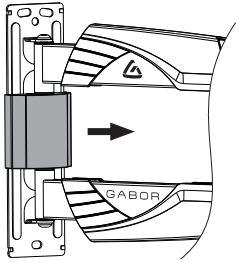

Remove the Display Mounting Plate

Loosen the top nuts slightly, then remove the bottom nut as shown. Slide the plate out from the wall bracket.

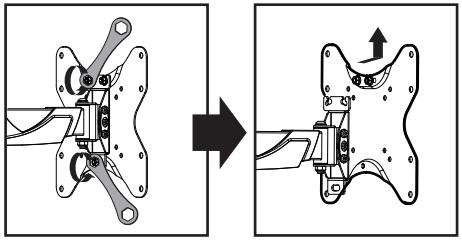

VESA Patterns

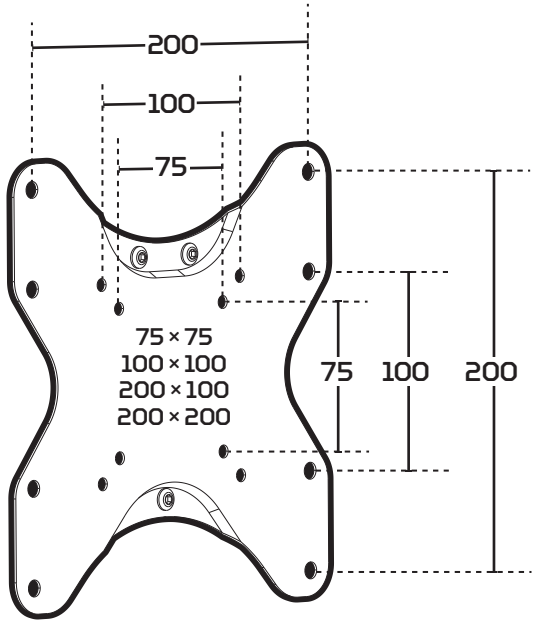

Attaching the Display Mounting Plate

Selecting the Right VESA Mounting Hardware for Your Display

A variey of screws are included to fit VESA standards on the backs of most displays. Select the screws that best fit your display. Hand-thread the screws to determine the correct diameter.

Install the mounting plate directly to your display.

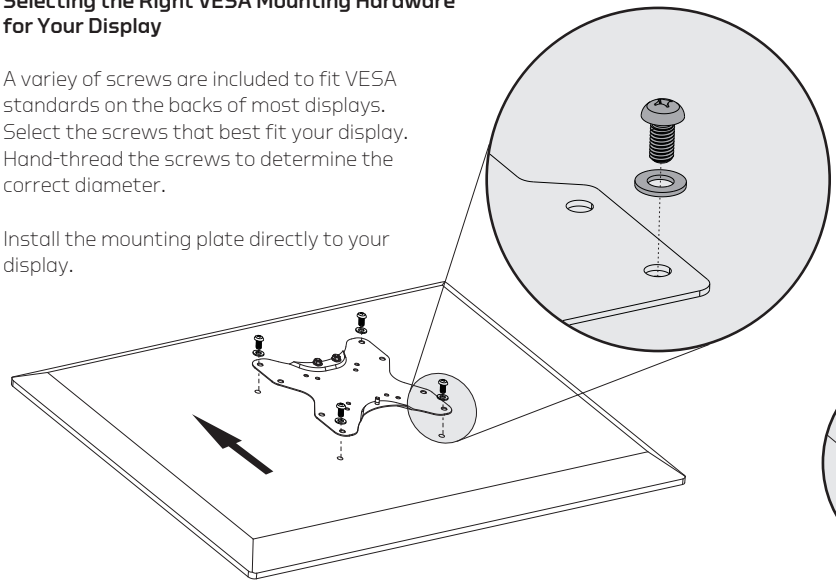

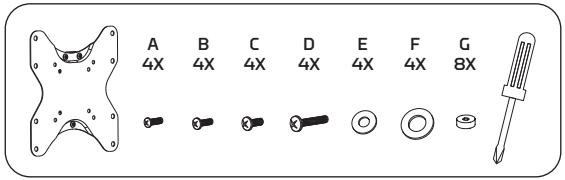

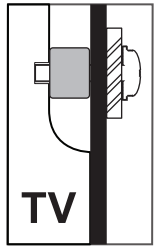

If Your Display Has Recessed Mounting or a Curved Back:
Install the spacers between the bracket and your display. You can combine spacers to best fit your display. Then fasten with the screws and washers until secure.

If the screw is too short, it may not hold the display. If it's too long, it may damage the display.

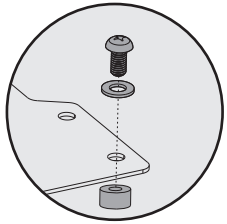

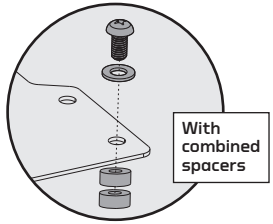

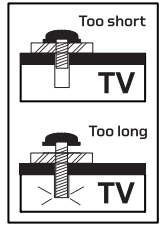

Attaching the Wall Bracket to Wooden Studs

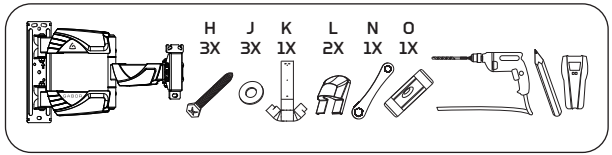

Wooden studs run vertically inside the wall, 16 inches apart, behind the drywall or plaster. The wall bracket must be mounted to a wooden stud, or the bracket could fall out and damage your display or cause personal harm.

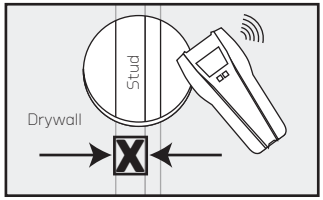

1. Use a stud finder to locate the edges of the wooden stud, and mark the center.

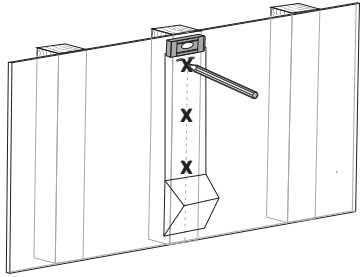

2. Place the wall bracket template up to the marked locations and tape it to the wall. Use the included bubble level to make sure the template is level before drilling. Use a pencil to mark the three drilling holes for the anchor screws and then apply a piece of tape over the marks.

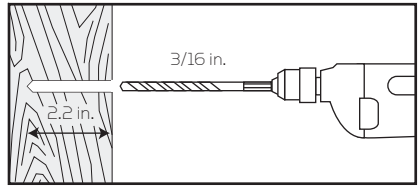

3. Use a 3/16-inch (4.5 mm) wood drill bit to predrill the marked spots 2.2 inches (55 mm) deep, and then clean out the debris from the holes. Remove the template from the wall.

Attaching the Wall Bracket to Wooden Studs (cont.)

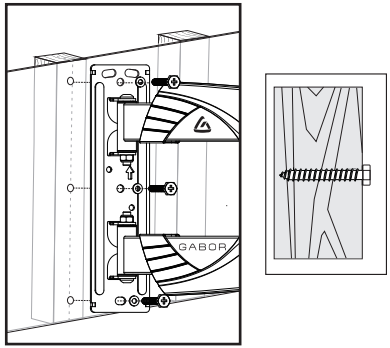

4. Attach the bracket to the wall by inserting the three anchor screws through the washers and the wall bracket's mounting holes, and screw them into the predrilled support holes until secure. Use the box-end wrench to further tighten the anchor screws, but do not overtighten.

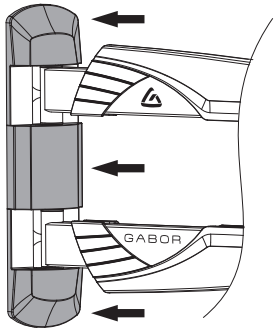

5. Attach the center cover and two end covers.

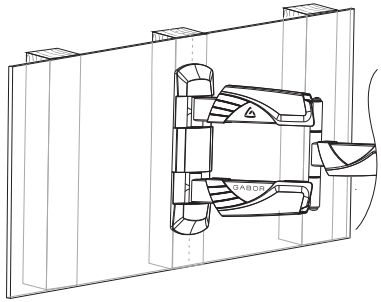

Wall bracket mounted to wooden stud, with correct screw placement.

Attaching the Wall Bracket to Concrete

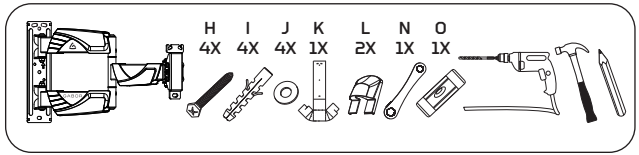

Warning! Make sure the concrete wall is solid and at least 8 inches (20 cm) thick. If the concrete exhibits cracks or other defects, this may result in failure of the concrete anchors and cause serious personal injury or damage to your display.

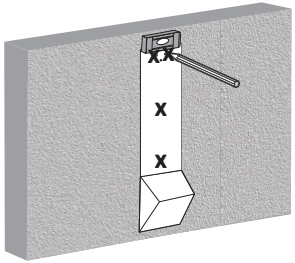

1. Place the wall bracket template up to the marked locations and tape it to the wall. Use the included bubble level to make sure the template is level before drilling. Use a pencil to mark the four drilling holes for the anchor screws and then apply a piece of tape over the marks.

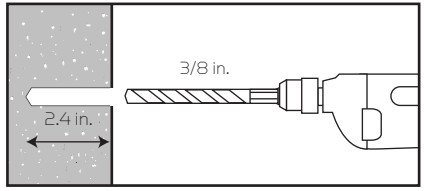

2. Use a 3/8-inch (10 mm) concrete drill bit to predrill the marked spots 2.4 inches (60 mm) deep, and then clean out the debris from the holes.

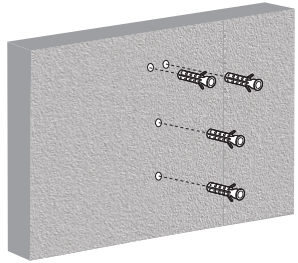

3. Remove the template, insert the concrete anchors into the predrilled holes, and use a hammer to tap the anchors into the concrete.

Attaching the Wall Bracket to Concrete (cont.)

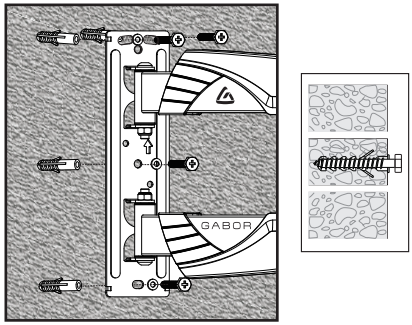

4. Attach the bracket to the wall by inserting the anchor screws through the washers and the wall bracket's mounting holes, and screw them into the anchors until secure. Use the box-end wrench to further tighten the screws, but do not overtighten.

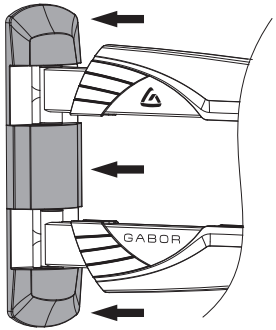

5. Attach the center cover and two end covers.

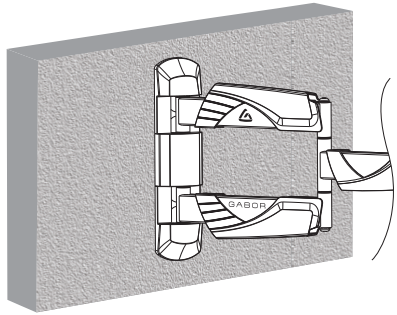

Wall bracket mounted to concrete, with correct screw placement.

Mounting the Display on the Wall Bracket





Important! We recommend that two people perform this step.

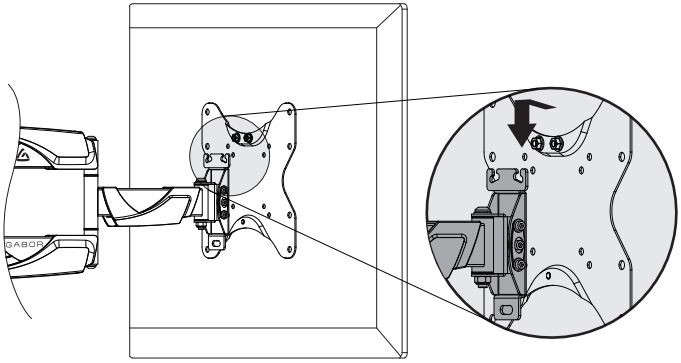

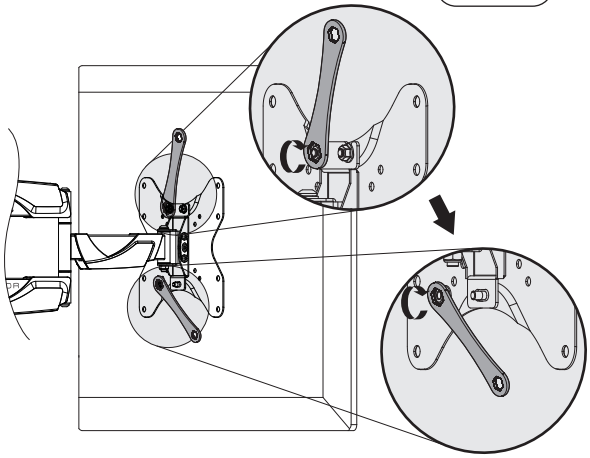

1. Make sure the two top nuts are attached and slightly loose. Lift your display up to the wall bracket, and seat the display into the mounting holes so that it hangs.

2. Replace the bottom hex nut and then tighten all three hex nuts using the box end wrench.

Post-Installation Adjustment

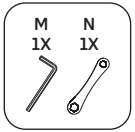

Once your display is mounted on the wall bracket, you can fine-tune adjustments to the horizontal level +3° to -3°, depth from the wall 1.8 to 20 inches, tilt +10° to -15° and pivot 180°.

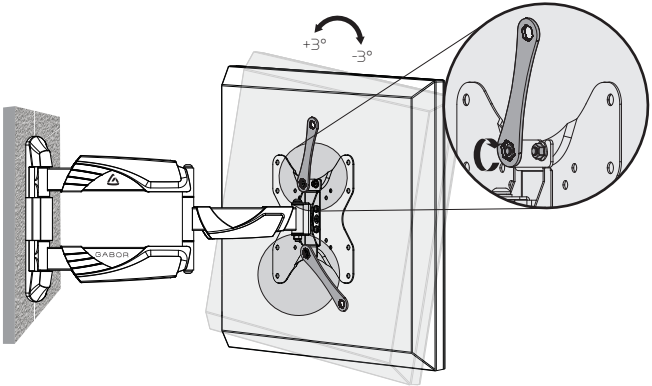

Horizontal Level

Loosen the three hex nuts with the included box-end wrench, and adjust the horizontal level +3° to -3°. Use the bubble level to make sure your display is level, then tighten the screws until secure.

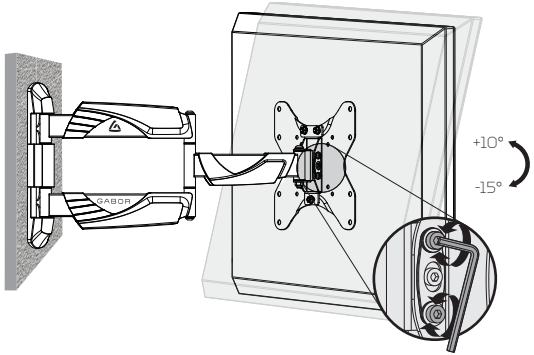

Tilt Angle

Adjust the top and bottom tension screws to the desired friction and tilt the display up or down +10° to -15°.

Post-Installation Adjustment (cont.)

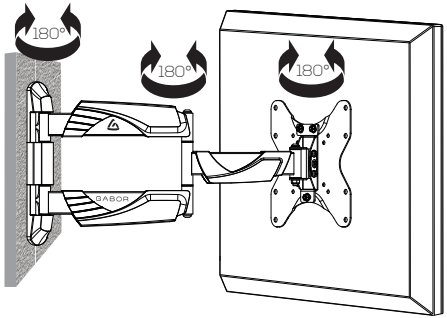

Display Pivot
Pivot your display up to 180° for flexible mounting in the corner of a room or around an object.

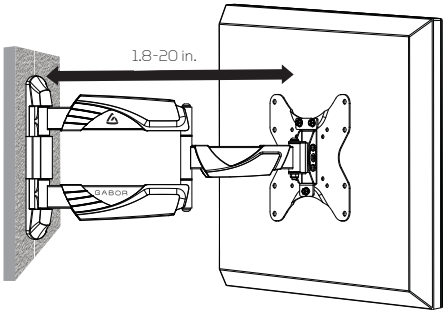

Display Depth
You can collapse or extend the mount so your display is 1.8 to 20 inches from the wall.

Cable Management

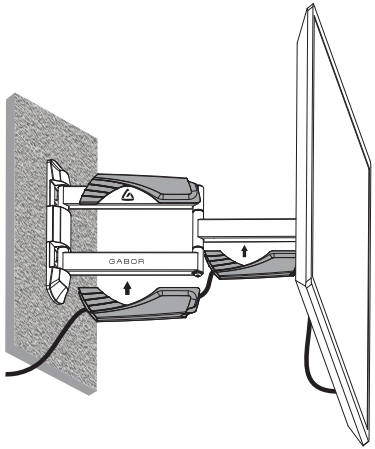

Run the power and A/V cables through cable covers on the top or bottom of the wall bracket extension arms.

Widen the cover openings to remove and slide the covers over the arms as shown.

Five-Year Limited Warranty

This Gabor product is warranted to the original purchaser to be free from defects in materials and workmanship under normal consumer use for a period of five (5) years from the original purchase date or thirty (30) days after replacement, whichever occurs later. The warranty provider's responsibility with respect to this limited warranty shall be limited solely to repair or replacement, at the provider's discretion, of any product that fails during normal use of this product in its intended manner and in its intended environment. Inoperability of the product or part(s) shall be determined by the warranty provider. If the product has been discontinued, the warranty provider reserves the right to replace it with a model of equivalent quality and function.

This warranty does not cover damage or defect caused by misuse, neglect, accident, alteration, abuse, improper installation or maintenance. EXCEPT AS PROVIDED HEREIN, THE WARRANTY PROVIDER MAKES NEITHER ANY EXPRESS WARRANTIES NOR ANY IMPLIED WARRANTIES, INCLUDING BUT NOT LIMITED TO ANY IMPLIED WARRANTY OF MERCHANTABILITY OR FITNESS FOR A PARTICULAR PURPOSE. This warranty provides you with specific legal rights, and you may also have additional rights that vary from state to state.

To obtain warranty coverage, contact the Gabor Customer Service Department to obtain a return merchandise authorization ("RMA") number, and return the defective product to Gabor along with the RMA number and proof of purchase. Shipment of the defective product is at the purchaser's own risk and expense.

For more information or to arrange service, visit www.madebygabor.com or call Customer Service at 212-594-2353.

Product warranty provided by the Gradus Group.

www.gradusgroup.com

Gabor is a registered trademark of the Gradus Group. © 2020 Gradus Group LLC. All Rights Reserved.

GABOR®
A Gradus Group Brand

GG3