GENELEC®

G One



Quick Setup Guide 2-5

Operating Manual 6-11

Käyttöohje 12-17

Quick setup guide

Loudspeaker placement

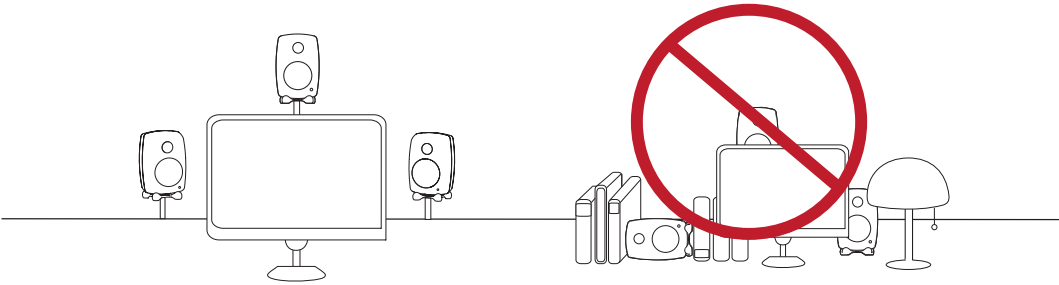

Desktop positioning

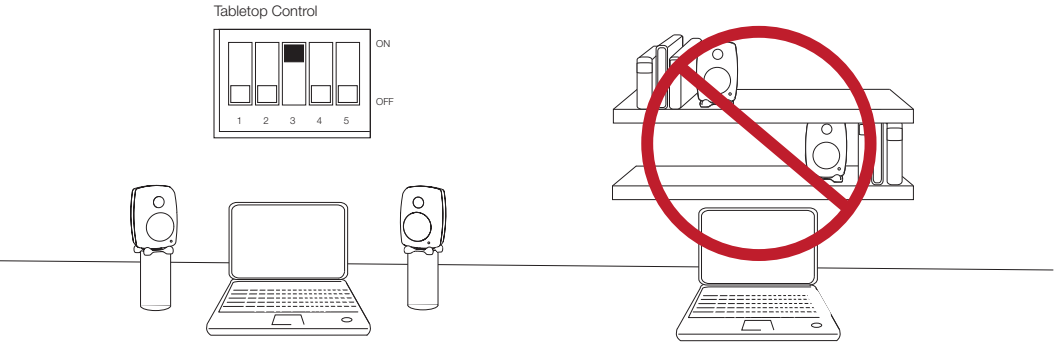

Loudspeaker angle and distance

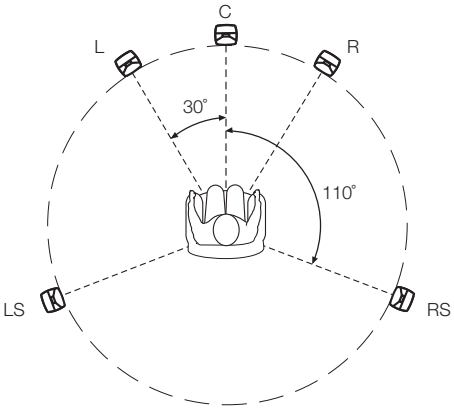

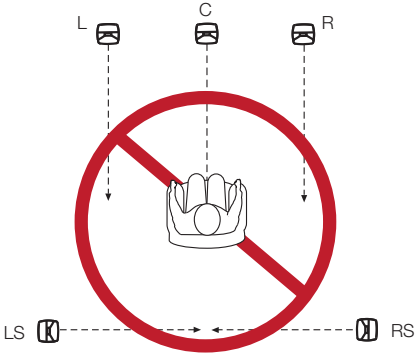

Splitting the RCA cable

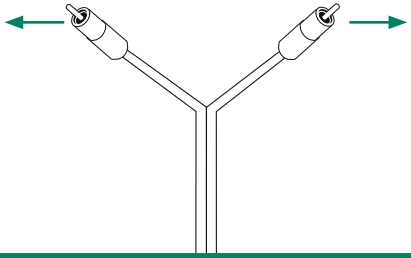

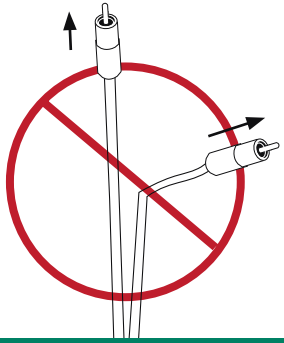

Connecting

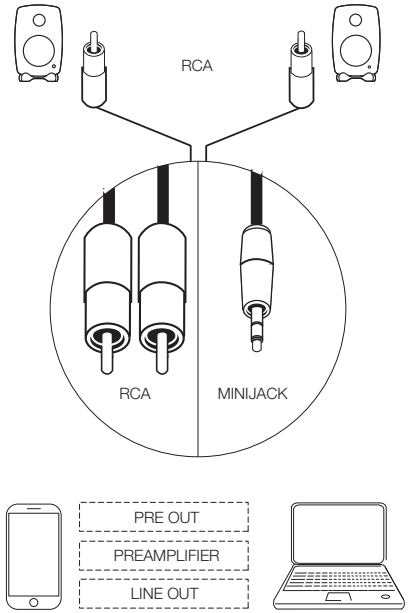
RCA
RCA
MINIJACK
PRE OUT
PREAMPLIFIER
LINE OUT

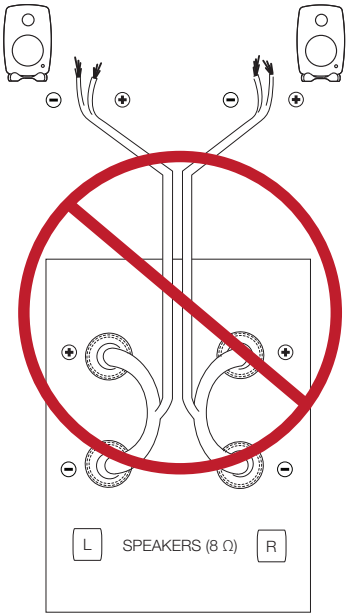
L
SPEAKERS (8 Ω)
R

Using tone controls

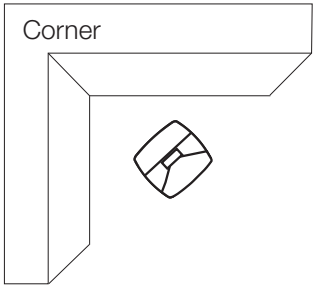

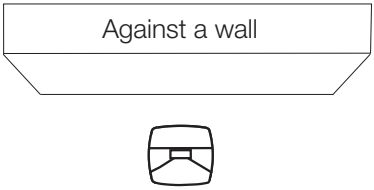

Bass -6 dB

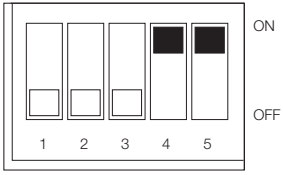

Bass -4 dB

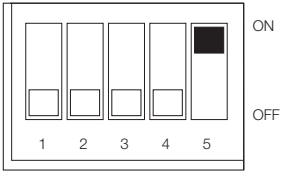

Operating Manual

G One

Active Loudspeaker

General description

The Genelec G One is a compact two way active loudspeaker designed to produce broad bandwidth sound with high output and low coloration.

Positioning the loudspeaker

Each loudspeaker is supplied with an built-in amplifier unit, signal cables, mains cable and an operating manual. After unpacking, place the loudspeakers in their required listening positions, pointing them to the center of the listening area. If possible, place the listening position to the central line of the room and the loudspeakers at equal distance from the walls.

Connections

Before connecting up, ensure that the power switch on the signal source is set to OFF.

Audio input is via an unbalanced RCA connector. Only line level audio signal from a preamplifier, computer sound card or similar signal source can be connected, never a high power signal from the speaker terminals of a power amplifier. Once the connections have been made, the loudspeakers are ready to be switched on.

ISS Autostart function

When the power switch on the loudspeaker is set to “ON”, the Intelligent Signal Sensing™ (ISS™) autostart function of the loudspeaker is active. Automatic powering down to standby mode happens after a certain time when playback has ended. The power consumption in standby mode is typically less than 0.5 watts. The playback will automatically resume once an input signal is detected from the source.

There is a slight delay in the automatic powering up. If this is undesirable, the ISS™ function can be disabled by setting the “ISS DISABLE” switch on the back panel to “ON” position. In this mode, the loudspeaker is powered on and off using the power switch on the back panel.

Level -10 dB switch

The “LEVEL -10 dB” switch reduces the input sensitivity of the G One by 10 decibels. Select the setting that matches the desired playback volume.

Setting the tone controls

The frequency response of the Genelec G One can be adjusted to match the acoustic environment by setting the tone control switches on the rear panel. The controls are “Tabletop” and “Bass”. Table 1 shows some typical settings in various situations. Figure 2 shows the effect of the controls on the frequency response.

Tabletop

This switch is recommended to be switched to “ON” when the loudspeakers are placed on a table or similar surface, such that there is a reflective surface between the loudspeaker and the listener. Such a placement typically causes

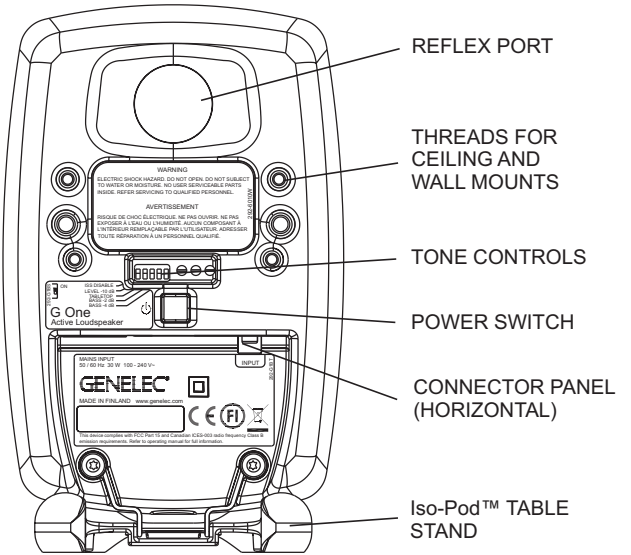

Figure 1. Control and connector layout on the rear panel of a G One.

a boost at certain bass frequencies, which the "Tabletop" function is designed to compensate for.

Bass

The "Bass" control offers three attenuation levels for the bass response below 2 kHz, usually necessary when the loudspeakers are placed near room boundaries or other situations when the bass sounds boomy and too dominant. The attenuation levels are -2 dB, -4 dB and -6 dB. The -6 dB attenuation is selected by setting both "Bass" switches to "ON".

The factory setting for the tone controls is all in the "OFF" position. This setting produces a

Loudspeaker Mounting Position	Tabletop	Bass
Flat anechoic response	OFF	OFF
Free standing in a damped room	OFF	OFF
Free standing in a reverberant room	OFF	-2 dB
In a corner	OFF	-6 dB
Near to a wall	OFF	-4 dB
On a desk	ON	-2 dB

Table 1: Suggested tone control settings for different acoustical environments

flat frequency response in the free field, when the loudspeaker is located far from all walls and other acoustically hard boundaries. Always start adjustment by setting all switches to "OFF" position. Measure or listen systematically through the different combinations of settings to find the best tonal balance.

Mounting considerations

Align the loudspeakers correctly
Always place the loudspeakers so that they are aimed towards the listening position. Vertical placement is preferable, as it minimizes acoustical cancellation problems between the drivers around the crossover frequency.

Maintain symmetry
Check that the loudspeakers are placed symmetrically and at an equal distance from the listening position. If possible, place the system so that the listening position is on the centerline of the room but not exactly at the center of the room. Place the loudspeakers are at an equal distance from the centerline and also at an equal distance from the listening position.

Minimize reflections
Acoustic reflections from objects close to the loudspeakers like desks, cabinets, computer monitors etc. can cause unwanted blurring of the sound image and also cause frequency response problems. These can be minimized by placing the loudspeaker clear of any hard surfaces.

Minimum clearances
Sufficient cooling for the amplifier and functioning of the reflex port must be ensured if the loudspeaker is installed in a restricted space such as a cabinet or integrated into a wall structure. The surroundings of the loudspeaker must always be open to the listening room with a minimum clearance of 5 centimeters (2") behind, above and on both sides of the loudspeaker. The space adjacent to the amplifier must either be ventilated or sufficiently large to dissipate heat so that the ambient temperature does not rise above 35 degrees Celsius (95°F).

Mounting options

The G One offers several mounting options: The Iso-Pod™ (Isolation Positioner/Decoupler™) vibration insulating table stand allows tilting the

loudspeaker for correct vertical alignment. On the base of the loudspeaker is a 3/8" UNC threaded hole compatible with a standard microphone stand. On the rear there are threaded holes for Omnimount® brackets.

Operating Environment

These loudspeakers are designed for indoor use only. The permissible ambient temperature is 15-35 degrees Celsius (50-95°F) and relative humidity 20% to 80% (non-condensing). When the product has been stored or transported in cool environment and is taken into a warm room, wait 0.5-1 hours before opening any packing to prevent condensation of humidity before connecting to mains power.

Maintenance

No user serviceable parts are to be found within the amplifier unit. Any maintenance or repair of the unit should only be undertaken by qualified service personnel.

Safety considerations

Although the G One has been designed in accordance with international safety standards, the following warnings and cautions should be observed to ensure safe operation and to maintain the loudspeaker under safe operating conditions:

- Servicing and adjustment must only be performed by qualified service personnel.
- The loudspeaker must not be opened.
- Do not expose the loudspeaker to water or moisture. Do not place any objects filled with liquid, such as vases on the loudspeaker or near it.
- This loudspeaker is capable of producing sound pressure levels in excess of 85dB, which may cause permanent hearing damage.
- Free flow of air behind the loudspeaker is necessary to maintain sufficient cooling. Do not obstruct airflow around the loudspeaker.
- Note that the amplifier is not completely disconnected from the AC mains service unless the mains power cord is removed from the amplifier or the mains outlet.

Guarantee

The G One is guaranteed for a period of two years against faults in materials or workmanship. Refer to supplier for full sales and guarantee terms.

Compliance to FCC rules

This device complies with part 15 of the FCC Rules. Operation is subject to the followinG One conditions:
This device may not cause harmful interference, and this device must accept any interference received, including interference that may cause undesired operation.

Note: This equipment has been tested and found to comply with the limits for a Class B digital device, pursuant to part 15 of the FCC Rules. These limits are designed to provide reasonable protection against harmful interference in a residential installation. This equipment generates, uses and can radiate radio frequency energy and, if not installed and used in accordance with the instructions, may cause harmful interference to radio communications. However, there is no guarantee that interference will not occur in a particular installation. If this equipment does cause harmful interference to radio or television reception, which can be determined by turning the equipment off and on, the user is encouraged to try to correct the interference by one or more of the following measures:

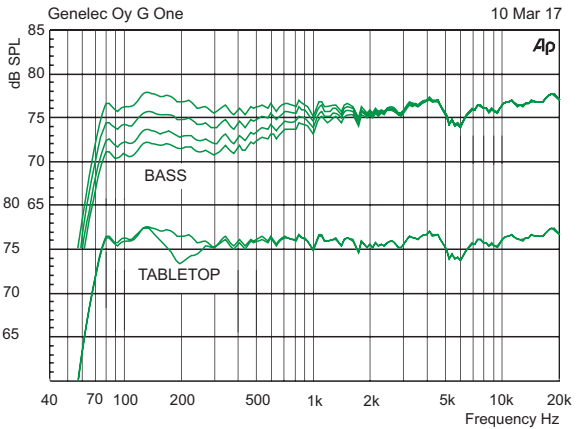

Figure 2. The curves show the effect of the “Tabletop” and “Bass” controls on the free field response of the G One.

- Reorient or relocate the receiving antenna.
- Increase the separation between the equipment and receiver.
- Connect the equipment into an outlet on a circuit different from that to which the receiver is connected.
- Consult the dealer or an experienced radio/TV technician for help.

Modifications not expressly approved by the manufacturer could void the user’s authority to operate the equipment under FCC rules.

SYSTEM SPECIFICATIONS

Frequency response (–6 dB)	67 Hz - 25 kHz
Max. short term sine wave acoustic output on axis in half space, averaged 100 Hz - 3 kHz at 1 m	≥ 96 dB SPL
Maximum long term RMS acoustic output in same conditions with IEC weighted noise (limited by driver unit protection circuit) at 1 m:	≥ 91 dB SPL
Self generated noise level in free field at 1 m on axis (A-weighted):	≤ 5 dB
Harmonic distortion at 85 dB SPL at 1 m on axis	70...400 Hz < 3 % >400 Hz < 0.5 %
Input connector type:	1 RCA female
Input impedance:	7 kOhm:
Crossover frequency, Bass/Treble:	3.0 kHz
Tabletop control operating range:	-4 dB at 200 Hz
Bass control operating range in –2 dB steps:	0 to -6 dB at 200 Hz
Bass amplifier power (long term output power is limited by driver unit protection circuitry)	25 W
Treble amplifier power (long term output power is limited by driver unit protection circuitry):	25 W
Amplifier system distortion at nominal output THD+N:	≤ 0.08 %
Mains voltage:	100-240 V AC, 50-60 Hz
Voltage operating range:	±10 %
Power consumption Standby (ISS active) Idle Full output	 <0.5 W 5 W 30 W
Bass driver Treble driver	76 mm (3 in) 19 mm ($^{3}/_{4}$ in)
Weight:	1.7 kg (3.7 lbs)
Dimensions: Height including Iso-Pod™ table stand Height without Iso-Pod™ table stand Width Depth	 195 mm ($7^{11}/_{16}$ in) 181 mm ($7^{1}/_{8}$ in) 121 mm ($4^{3}/_{4}$ in) 115 mm ($4^{1}/_{2}$ in)