US-OB-33

OMNIDIRECTIONAL USB BOUNDARY MICROPHONE



PRODUCT MANUAL

POLSEN®

THANK YOU FOR CHOOSING POLSEN.

The Polsen US-OB-33 Omnidirectional USB Boundary Microphone connects to your computer and will noticeably improve your audio quality during personal video meetings and conference calls. It's a step up from your computer's internal microphone, and it will let all participants sit comfortably and talk normally during videoconferences and calls. The microphone runs off the power from your computer's USB port, and it supports plug and play, so no additional software is needed. The internal A/D converter boasts a 16-bit and 48 kHz sample rate for accurate, CD-quality sound.

OVERVIEW

1. USB Type-C™ connector

Use the included USB cable to connect the microphone to a computer.

2. LED indicator

Lights up to indicate connection to a powered USB port.

3. Mute button

A green LED indicates the microphone is on and active. The LED changes to red when the microphone is muted.

4. USB cable

The USB Type-C connector plugs into the microphone. The USB Standard-A connector plugs into your computer.

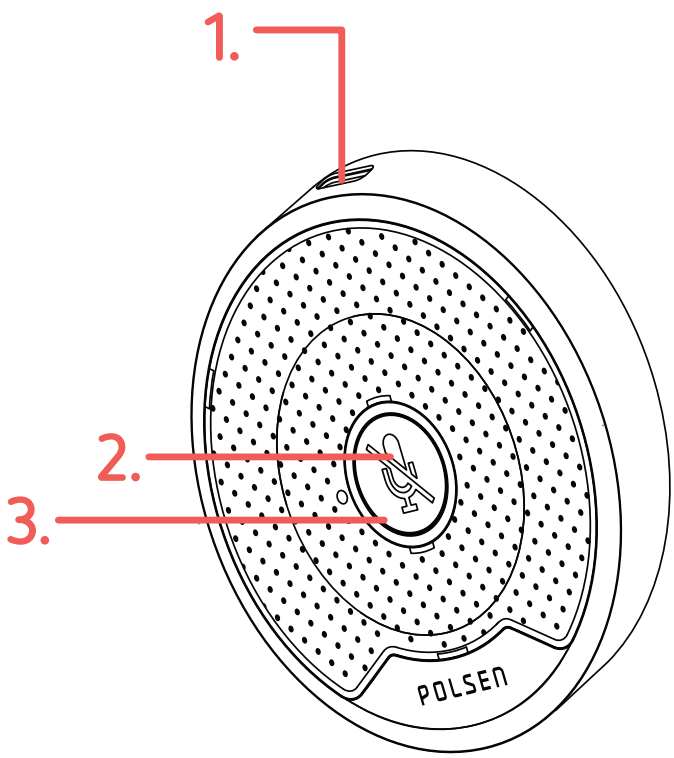

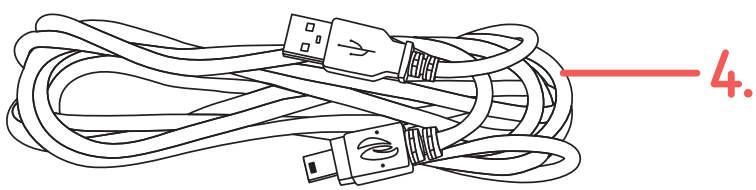

PRECAUTIONS

- Please read and follow these instructions, and keep this manual in a safe place.
- Keep this product away from water and any flammable gases or liquids.
- Do not attempt to disassemble or repair this product.
- Handle this product with care.
- Clean this product with only a soft, dry cloth.
- Make sure that this product is intact and that there are no missing parts.
- All images are for illustrative purposes only.

OPERATING THE US-OB-33

Setting Up

Set the microphone on a flat, steady surface, and plug the USB cable into the microphone and an available USB port on your computer. The microphone's LED will light up to indicate the microphone is receiving power.

Sound Settings

Open your computer's sound settings (Windows) or sound preferences (Mac), and select the US-OB-33 as the input device.

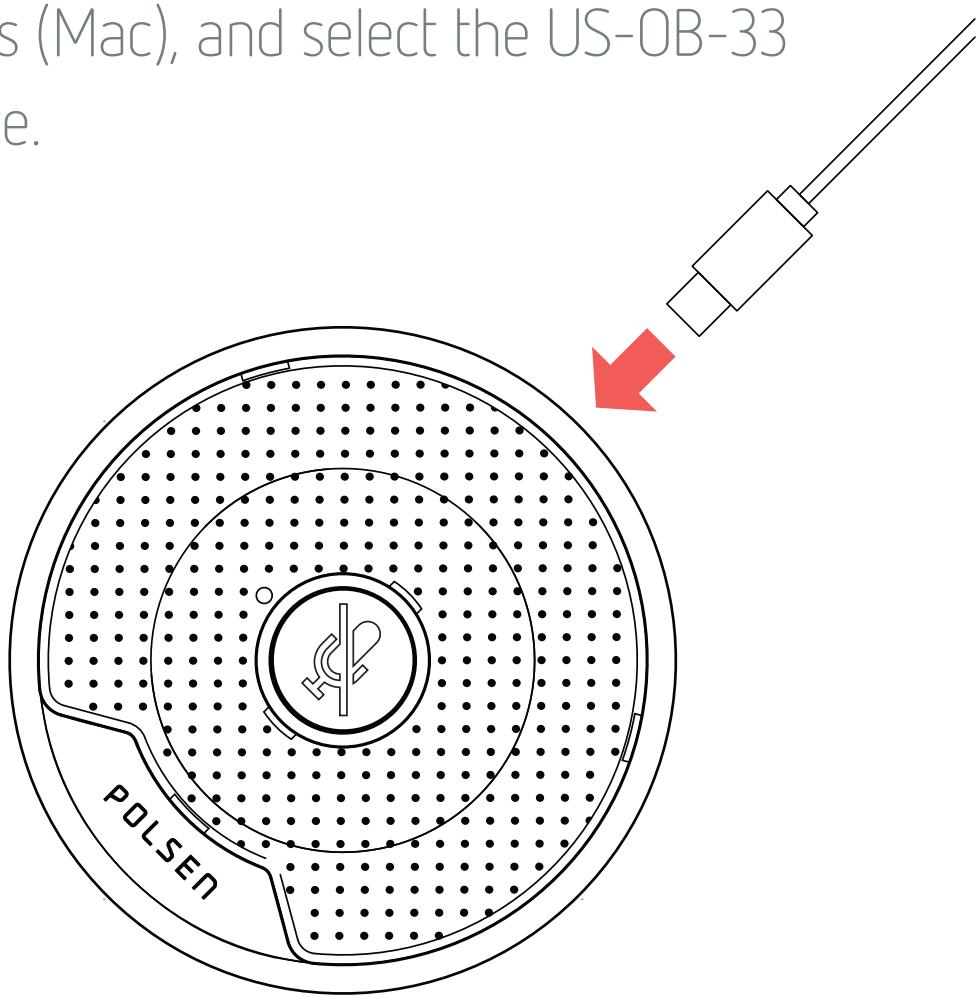

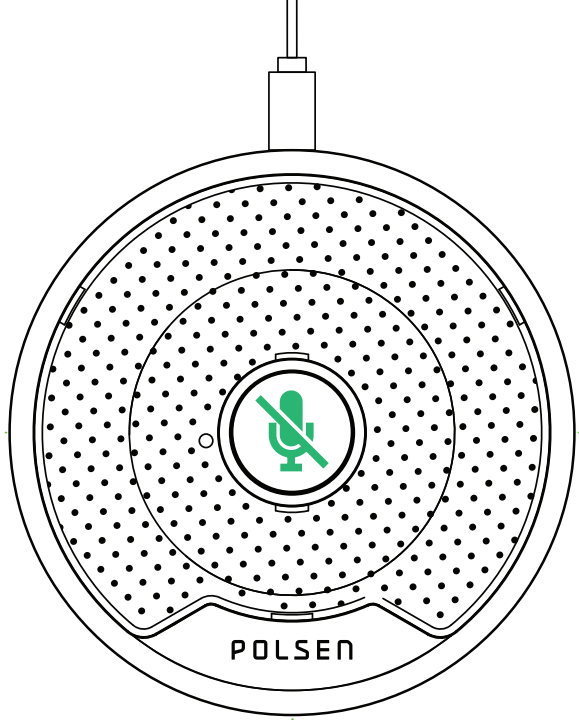

Mute Button

Make sure the LED indicator is green when you're speaking. To mute the microphone, press the mute button. The LED will turn red to indicate the microphone is muted. Press the mute button again to unmute the microphone.

Microphone Placement

The microphone features an omnidirectional polar pattern that uniformly picks up sound 360 degrees around the microphone. If several people are using the microphone, set it in the center of the table, and it will pick up all participants seated around it.

OMNIDIRECTIONAL POLAR PATTERN

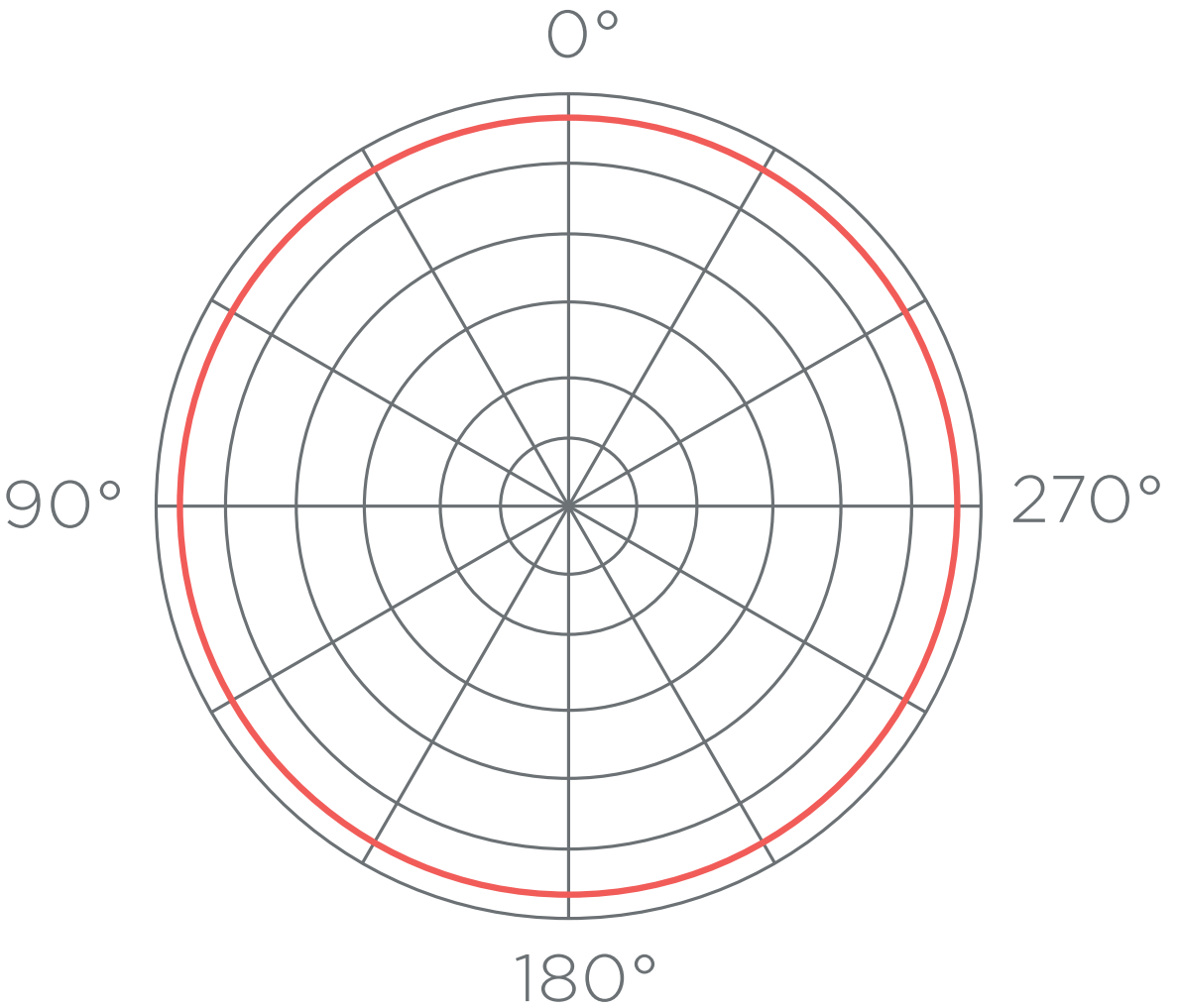

TROUBLESHOOTING

Problem	Solution
The microphone is connected, but the other people in my conference can't hear me.	• Make sure that both USB connectors on the cable are fully inserted into the plugs on the microphone and computer. • Make sure the microphone's LED indicator is green. If it's red, press the mute button to unmute the microphone. • Go to your computer's system settings/preferences, and select the US-OB-33 as the input device.

SPECIFICATIONS

Transducer Condenser

Polar pattern Omnidirectional

Frequency response 100 Hz to 16 kHz

Sample rate 16 bit, 48 kHz

Sensitivity -42 dB ±3 dB

Operating voltage 5 V DC, 200 mA

Output connector USB Type-C (USB 2.0)

Mute switch Yes

Housing material Base: Metal
Grille: ABS plastic

Dimensions Diameter: 2.8 in. (7 cm)
Height: 0.6 in. (1.5 cm)

Weight 4.9 oz. (140 g)

Cable length 6.6 ft. (2 m)

Cable connectors USB Type-C male, USB Standard-A male

Compatibility Windows, MacOS

ONE-YEAR LIMITED WARRANTY

This Polsen product is warranted to the original purchaser to be free from defects in materials and workmanship under normal consumer use for a period of one (1) year from the original purchase date or thirty (30) days after replacement, whichever occurs later. The warranty provider's responsibility with respect to this limited warranty shall be limited solely to repair or replacement, at the provider's discretion, of any product that fails during normal use of this product in its intended manner and in its intended environment. Inoperability of the product or part(s) shall be determined by the warranty provider. If the product has been discontinued, the warranty provider reserves the right to replace it with a model of equivalent quality and function.

This warranty does not cover damage or defect caused by misuse, neglect, accident, alteration, abuse, improper installation or maintenance. EXCEPT AS PROVIDED HEREIN, THE WARRANTY PROVIDER MAKES NEITHER ANY EXPRESS WARRANTIES NOR ANY IMPLIED WARRANTIES, INCLUDING BUT NOT LIMITED TO ANY IMPLIED WARRANTY OF MERCHANTABILITY OR FITNESS FOR A PARTICULAR PURPOSE. This warranty provides you with specific legal rights, and you may also have additional rights that vary from state to state.

To obtain warranty coverage, contact the Polsen Customer Service Department to obtain a return merchandise authorization ("RMA") number, and return the defective product to Polsen along with the RMA number and proof of purchase. Shipment of the defective product is at the purchaser's own risk and expense.

For more information or to arrange service, visit www.polsenaudio.com or call Customer Service at 212-594-2353.

Product warranty provided by the Gradus Group.
www.gradusgroup.com

POLSEN®
A Gradus Group Brand

Polsen is a registered trademark of the Gradus Group.
© 2020 Gradus Group LLC. All Rights Reserved. GG1