GABOR®

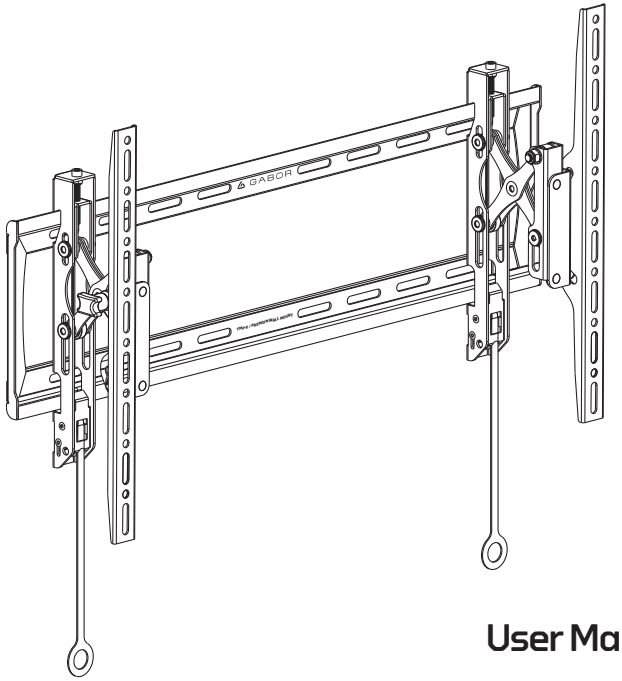

TMP-X / PREMIUM TILTING

WALL MOUNT

for Extra Large Flat-Panel Displays

User Manual

Thank you for choosing Gabor.

The Gabor TMP-X Premium Tilting Wall Mount offers improved tilt range and greater access to ports and connections for extra-large flat panel displays measuring 42 to 90 inches and weighing up to 154 pounds. Independent mounting arms allow each side of your display to extend 2.95 to 5.3 inches, so you can easily reach behind the display for maintenance and cable access. This extension increases the maximum tilt range to +5° to -12°, giving you a larger viewing angle than a traditional tilting wall mount. The open wall plate design provides space for placing wall ports directly behind your TV or monitor and allowing you to keep your cables short and hidden.

If you have safety concerns about installing this product, contact a qualified professional or installation contractor.
If this product is missing hardware or there are defective parts, visit www.madebygabor.com or call Customer Service at 212-594-2353.

Safety Warnings

- When installing this product, be sure to refer to the mounting instructions detailed in this manual; failure to abide by the mounting instructions may void the product's warranty.
- Do not use this product for any flat-panel display other than what it is intended for; the exact specifications, size parameters, and weight limits are found both on the product box and in the instruction manual.
- It is strongly recommended that this product be installed by a qualified professional or installation contractor; Gabor takes no responsibility for any product damage or personal injury resulting from mishandling, incorrect mounting, faulty assembly, or improper use of this product.
- The included hardware of this product has been designed specifically for mounting directly on wooden studs or concrete walls; depending on wall type and material, the use of additional appropriate mounting hardware and/or accessories such as heavy-duty anchors may be required.
- It is recommended that at least 2 people perform the installation process to prevent injury from mishandling or dropping the product and/or flat-panel displays.
- The included mounting hardware (anchor screws, anchors, and anchor washers) is not intended for use on metal studs, and may not be appropriate for old or weak walls; it is best to consult with a qualified professional to determine whether your wall is capable of supporting this bracket.
- Do not mount the device on structures that may be affected by vibrations or noticeable impacts; do not install near a heater, fireplace, or any other source of direct heat energy.
- This product may contain small parts which can possibly pose a choking hazard; keep out of reach of children and pets.
- Excessive exposure to liquids may damage the finish of this product; when cleaning this product, use only a mild detergent solution, and quickly wipe dry with a soft cloth.
- All images are for illustrative purposes only.

Product Specifications

Depth from Mounting Source
2.95 to 5.3 in. (7.6 to 13.5 cm)

Recommended Screen Sizes
42 to 90 in. (109 to 228.6 cm)

Max Weight Capacity
154 lb. (70 kg) - Wooden studs, concrete
110 lb. (49.9 kg) - Metal studs

Horizontal Level
±5°

Tilt Angle
+5° to -12°

Material
Steel

VESA Mounting Patterns
200 x 200
200 x 300
200 x 400
300 x 200
300 x 300
400 x 200
400 x 300
400 x 400
450 x 400
500 x 200
500 x 300
500 x 400
600 x 200
600 x 300
600 x 400
650 x 400
700 x 400

Wall-Plate Dimensions
28.5 x 8.125 in. (72.4 x 20.6 cm)

Weight
8.1 lb. (3.7 kg)

Overview

Wall plate

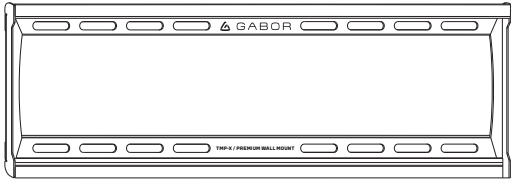

Display brackets

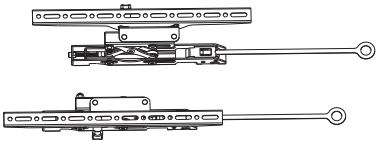

A 4X M5 × 14 mm screws	**B** 4X M6 × 14 mm screws	**C** 4X M6 × 30 mm screws	**D** 4X M8 × 30 mm screws	**E** 4X M8 × 50 mm screws	**F** 4X M6, M8 M5 Rectangle washers	**G** 8X Small spacers
H 8X Large spacers	**I** 6X Anchor screws	**J** 6X Concrete anchors	**K** 6X Anchor screw washers	**L** 1X Wall plate template	**M** 1X Hex wrench	**N** 1X Bubble level

Required Tools

- Drill
- Phillips screwdriver
- Hammer
- Stud finder
- Tape measure
- Wall tape
- 3/16 in. (4.5 mm) Wood drill bit
- 3/8 in. (10 mm) Concrete drill bit
- 1/2 in. (13 mm) metal drill bit
- Pencil

Metal Studs Installation Hardware

Not included

4X 1/4-20 SNAP Toggle anchors	**4X** M8×45 mm anchor screws	**4X** 1/4-20 washers

Display/TV Placement

Before installing the Gabor Premium Tilting Wall Mount, you will need to determine the placement of your display and identify surrounding support structures for attachment.

The best height for a display is at the viewer's eye level. You can find this height in one of two ways.

1. Measure the distance from the seating area to the viewing area. The ideal position is when the center of the display (where the diagonals meet) is as close as possible to eye level.

OR

2. Cut a piece of sturdy cardboard that's approximately the same size as your display. Use the cardboard to find a comfortable height, and mark the mounting location with a pencil.

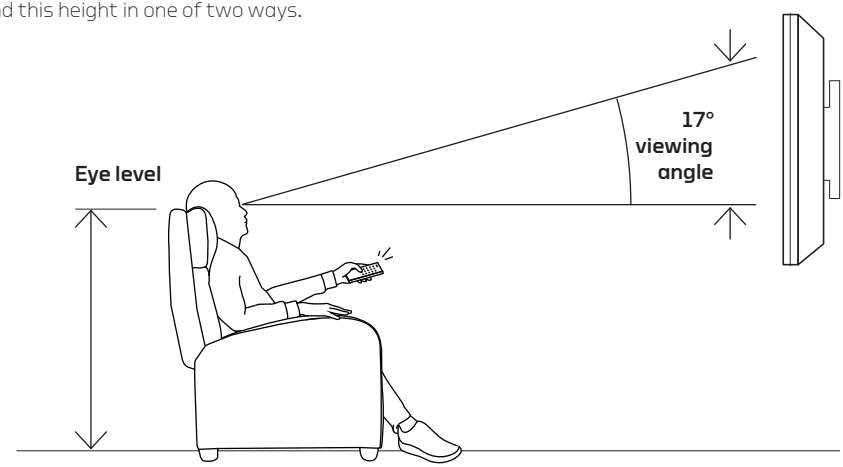

Attaching the Display/TV Brackets

Selecting the Right VESA Mounting Hardware for Your Display

A variety of screws are included to fit VESA standards on the backs of most displays. Select the M5, M6, or M8 screws and washers that best fit your display. Hand-thread the screws to determine the correct diameter.

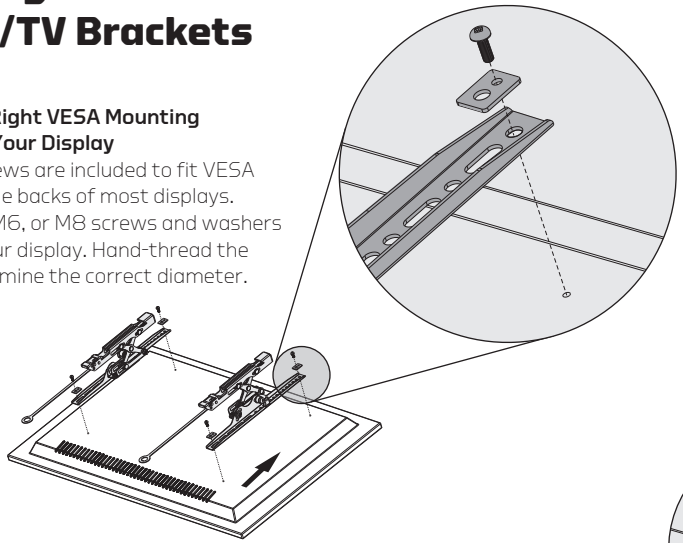

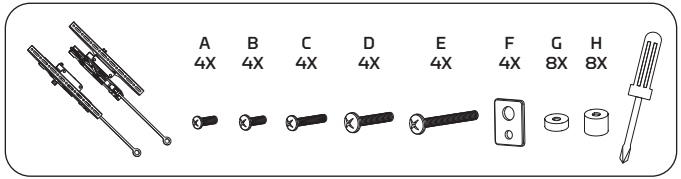

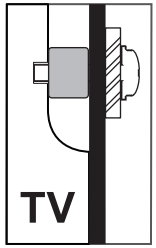

If Your Display Has Recessed Mounting or a Curved Back: Install the spacers between the bracket and your display. You can combine spacers to best fit your display. Then fasten with the screws and washers until secure.

If the screw is too short, it may not hold the display. If it's too long, it may damage the display.

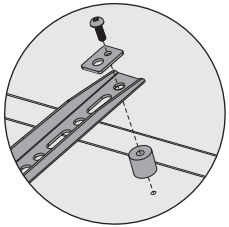

OR

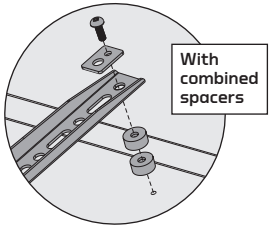

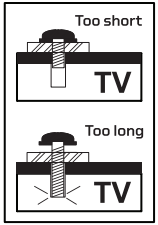

Warning! The display brackets contain potential pinch points. Keep your fingers away from the pinch points when expanding and retracting the brackets and your display.

Attaching the Wall Bracket to Wooden Studs

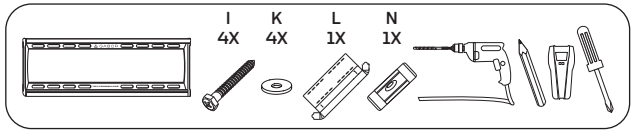

Caution! Wooden studs run vertically inside the wall. The wall bracket must be mounted to wooden studs at least 1.5 inches wide and spaced 16 inches apart, or the bracket could fall out and damage your display or cause personal harm.

1. Use a stud finder to locate the edges of the wooden stud, and mark the center.

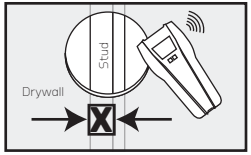

2. Place the wall plate template up to the marked locations. Use the provided bubble level to make sure the template will be level before drilling, and tape it to the wall. Use a pencil to mark drilling holes for the four anchor screws.

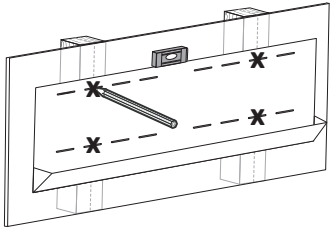

3. Use a 3/16-inch (4.5 mm) wood drill bit to predrill the marked spots 2.2 inches (55 mm) deep, and then clean out the debris from the holes. Remove the template.

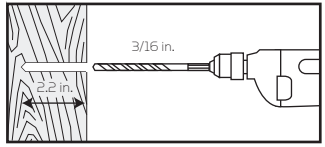

4. Attach the plate to the wall by inserting the four anchor screws through the washers and the wall plate's mounting holes, and screw them into the predrilled support holes until secure. Use a Philips screwdriver to further tighten the anchor screws, but do not overtighten.

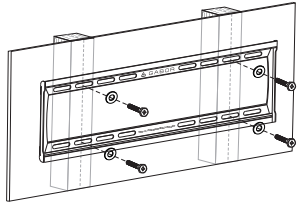

Attaching the Wall Bracket to a Concrete Wall or Concrete Blocks

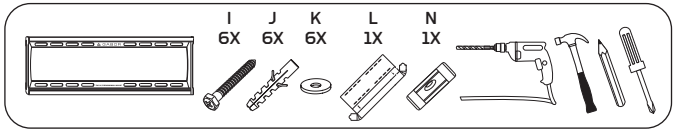

Caution! Make sure the concrete wall or block is solid and at least 8 inches thick. Install the wall plate at least 16 inches between anchors. If the concrete exhibits cracks or other defects, this may result in failure of the concrete anchors and cause serious personal injury or damage your display.

Warning! Do not drill into the mortar between concrete blocks. The display brackets must remain centered on the wall plate.

1. Place the wall plate template up to the marked location. Use the provided bubble level to make sure the template will be level before drilling, and tape it to the wall. Use a pencil to mark drilling holes for the six anchor screws.

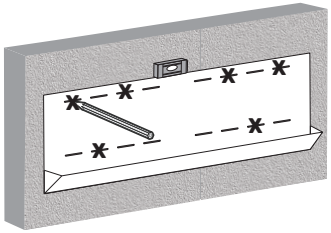

2. Use a 3/8-inch (10 mm) concrete drill bit to predrill the marked spots 2.4 inches (60 mm) deep, and then clean out the debris from the holes.

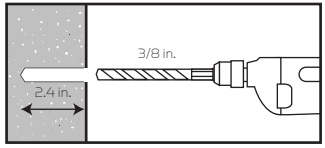

3. Remove the template and insert the concrete anchors into the predrilled holes, using a hammer to tap the anchors into the concrete.

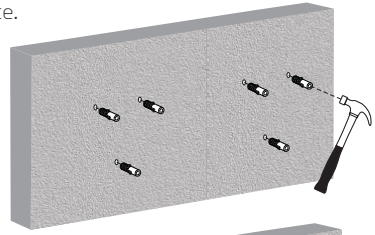

4. Attach the wall plate to the wall by inserting the anchor screws through the washers and the wall plate's mounting holes and screw them into the anchors until secure. Use a Philips screwdriver to further tighten the screws, but do not overtighten.

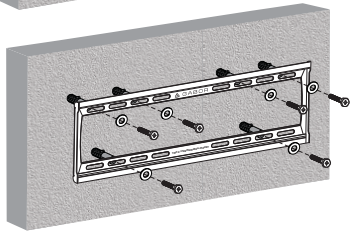

Attaching the Wall Bracket to Metal Studs

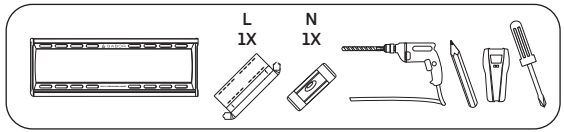

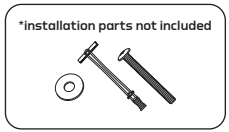

Caution! Metal studs run vertically inside the wall, 16 inches apart, behind the drywall or plaster. The wall bracket must be mounted to a metal stud at least 2 inches wide, or the bracket could fall out and damage your display or cause personal harm.

1. Use a stud finder to locate the edges of the metal stud, and mark the center.

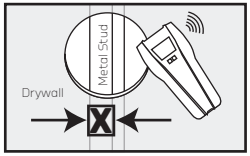

2. Place the wall plate template up to the marked locations, and tape it to the wall. Use the provided bubble level to make sure the plate will be level before drilling. Use a pencil to mark drilling holes for the four anchor screws.

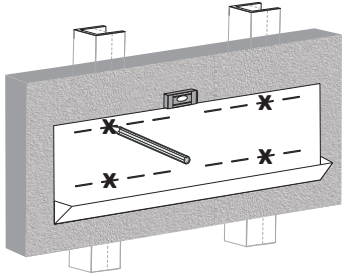

3. Use a 1/2-inch (13 mm) metal drill bit to predrill the marked spots 1 inch (25 mm) deep, and then clean out the debris from the holes. Remove the template.

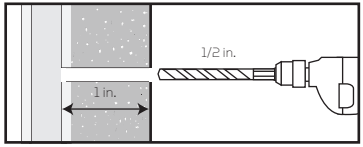

4. Insert the SNAP Toggle anchors into the predrilled holes **a.** Pull to flip the anchor inside the wall **b.** Hold the end of the anchor and slide the cap against the drywall **c.** Snap off the ends to lock the anchor in place **d.**

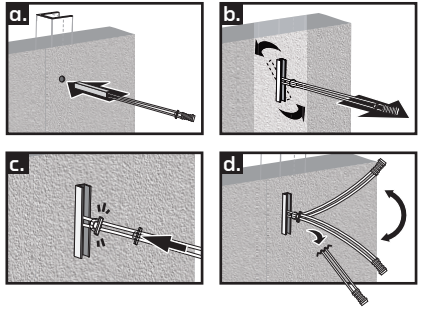

Attaching the Wall Bracket to Metal Studs (cont.)

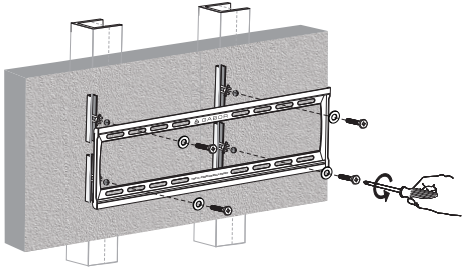

5. Attach the plate to the wall by inserting the four anchor screws through the washers and the wall plate's mounting holes, and screw them into the installed toggles until secure. Use a Philips screwdriver to further tighten the anchor screws, but do not overtighten.

Mounting the Display on the Wall Plate



Important! We recommend that two people perform this step.

1. Pull down the display bracket's release tab until it stops.

2. Lift your display up to the wall plate, and hang the display from the top hooks of the brackets.

3. Pull down on the release tabs as you gently press the bottom of the display bracket against the wall plate until you hear it click, securing the display.

4. Push the release tab upward for storage.

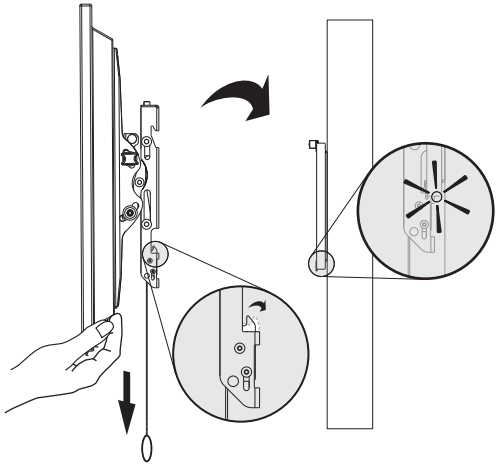

Post-installation Adjustment

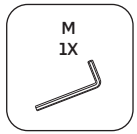

Once your display is mounted on the wall mount, you can independently expand each side of your display's depth and fine-tune the horizontal level and tilt angle.

Display Depth
You can collapse or extend the mount independently on each side so your display is 2.95 to 5.3 inches from the wall.

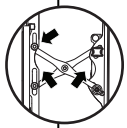

Warning! The display brackets contain potential pinch points. Keep your fingers away from the pinch points when expanding and retracting the brackets and your display.

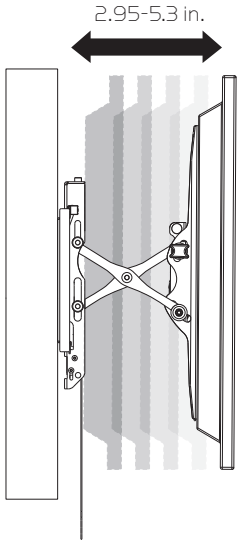

Horizontal Level
Use the included hex key to turn the adjustment screws located at the top of each display bracket. Increase the display height up to 1 inch and offset the horizontal level up to 5 degrees.

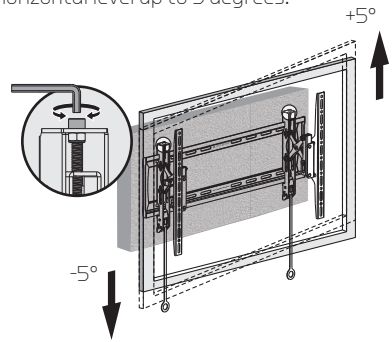

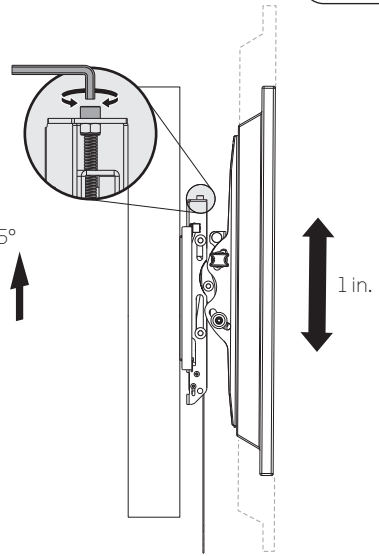

Post-installation Adjustment (cont.)

Tilt Angle
Use the tilt-tension knobs on both brackets to adjust the tension for the tilting mechanisms. Tilt the display to the ideal viewing angle from +5° to -12°, and tighten the tilt-tension knobs until secure.

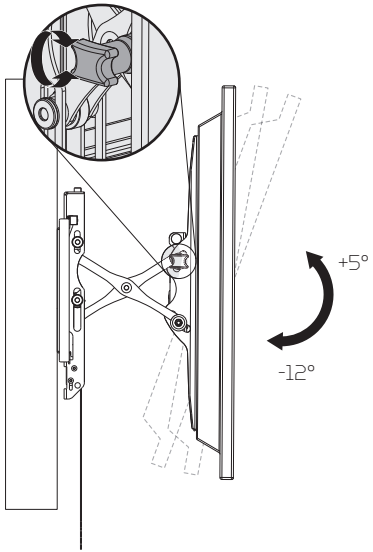

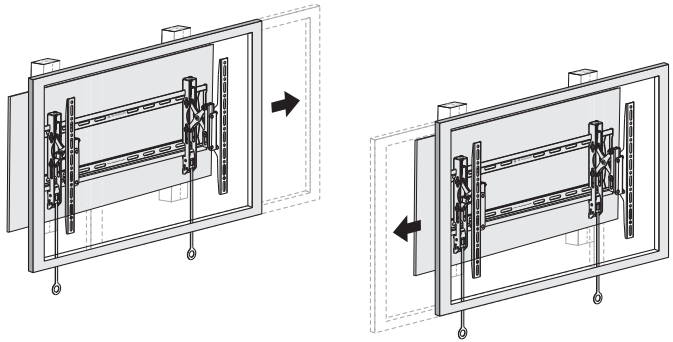

Lateral Position

Warning! This is for wood and metal stud installations only. For concrete installations, the display brackets must remain centered on the wall plate.

Slide your display left or right along the wall plate.

Locking the Mount

For extra protection against display theft, use a padlock (not included). This provides added security and is ideal when using the mount in public spaces.

Insert a lock through the display bracket's eyelet. Repeat on the other bracket.

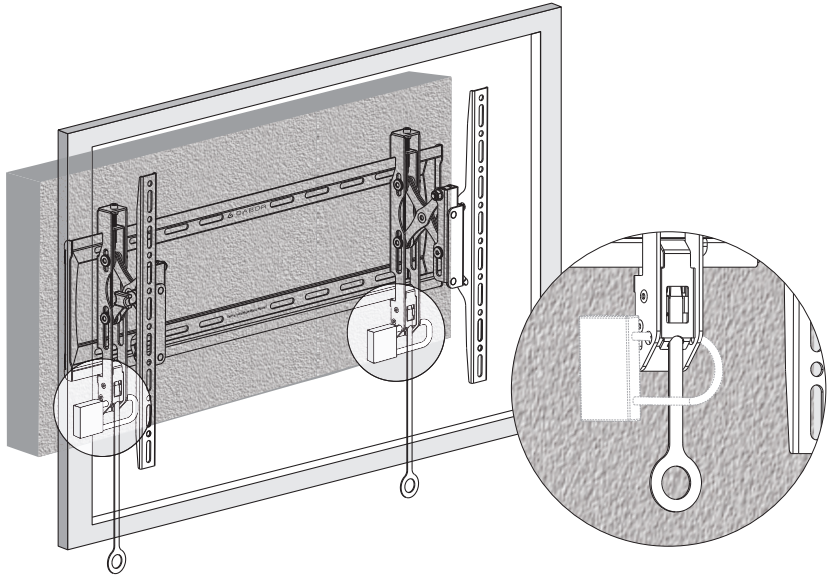

Removing the Display from the Wall Bracket



Important! We recommend that two people perform this step.

Pull down on each bracket's release tab and gently swing the display outward, away from the wall.

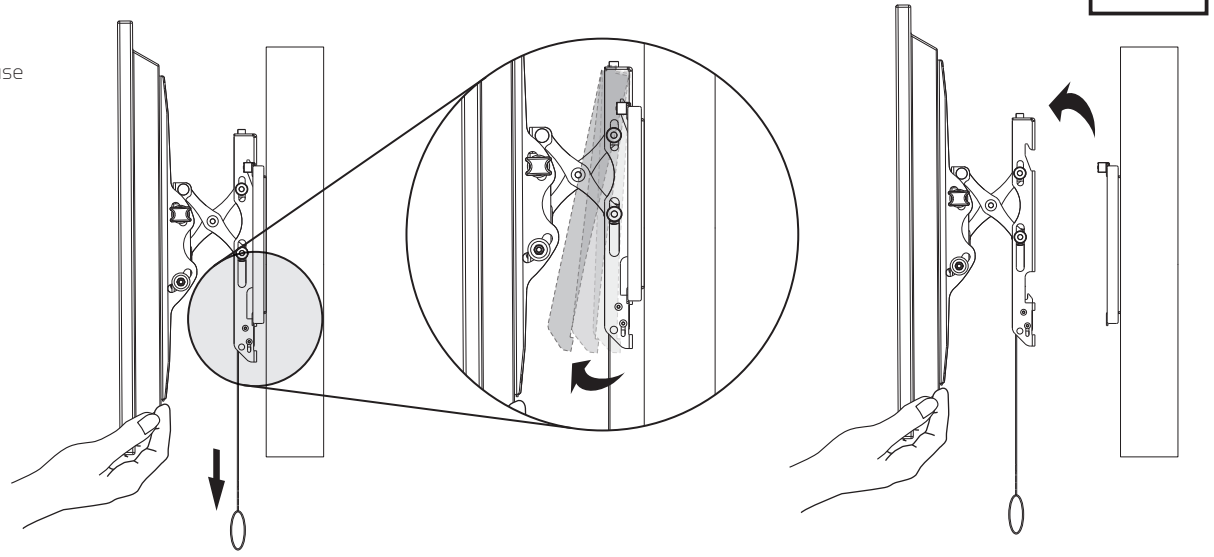

Ten-Year Limited Warranty

This Gabor product is warranted to the original purchaser to be free from defects in materials and workmanship under normal consumer use for a period of ten (10) years from the original purchase date or thirty (30) days after replacement, whichever occurs later. The warranty provider's responsibility with respect to this limited warranty shall be limited solely to repair or replacement, at the provider's discretion, of any product that fails during normal use of this product in its intended manner and in its intended environment. Inoperability of the product or part(s) shall be determined by the warranty provider. If the product has been discontinued, the warranty provider reserves the right to replace it with a model of equivalent quality and function.

This warranty does not cover damage or defect caused by misuse, neglect, accident, alteration, abuse, improper installation or maintenance. EXCEPT AS PROVIDED HEREIN, THE WARRANTY PROVIDER MAKES NEITHER ANY EXPRESS WARRANTIES NOR ANY IMPLIED WARRANTIES, INCLUDING BUT NOT LIMITED TO ANY IMPLIED WARRANTY OF MERCHANTABILITY OR FITNESS FOR A PARTICULAR PURPOSE. This warranty provides you with specific legal rights, and you may also have additional rights that vary from state to state.

To obtain warranty coverage, contact the Gabor Customer Service Department to obtain a return merchandise authorization ("RMA") number, and return the defective product to Gabor along with the RMA number and proof of purchase. Shipment of the defective product is at the purchaser's own risk and expense.

For more information or to arrange service, visit www.madebygabor.com or call Customer Service at 212-594-2353.

Product warranty provided by the Gradus Group.

www.gradusgroup.com

GABOR®
A **Gradus Group** Brand

Gabor is a registered trademark of the Gradus Group. © 2021 Gradus Group LLC. All Rights Reserved.

GG2