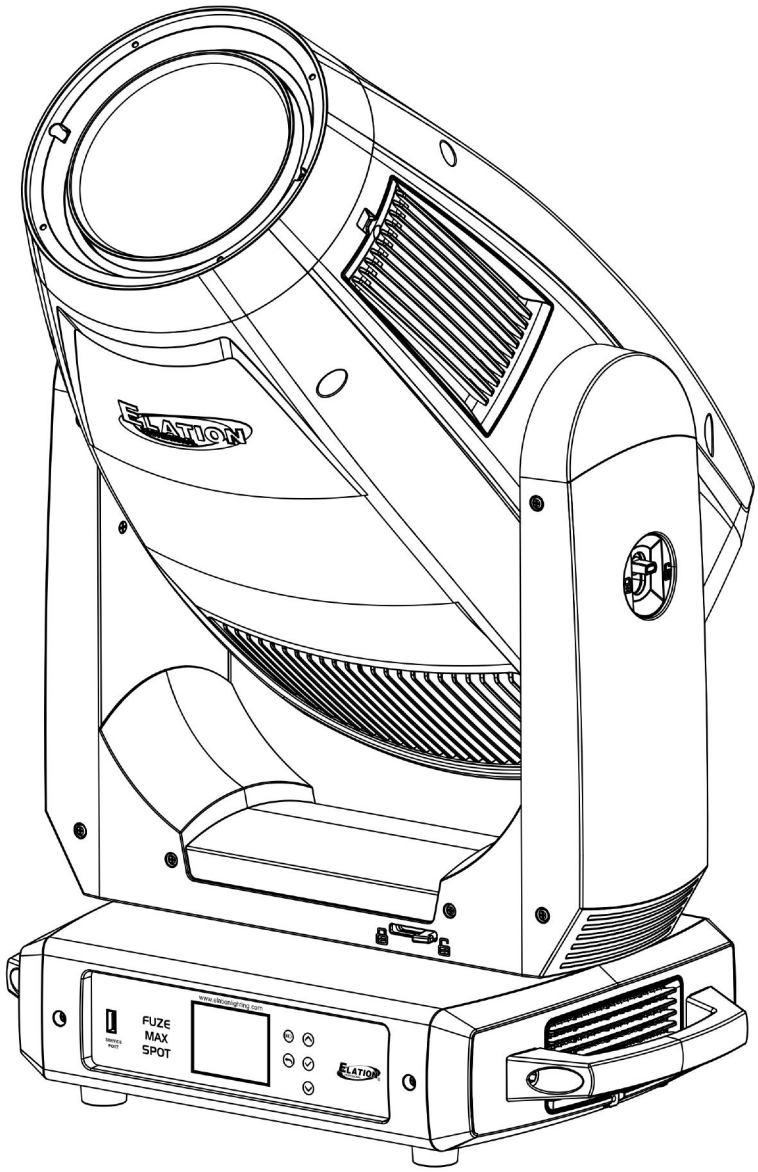

FUZE MAX SPOT

user manual

©2022 ELATION PROFESSIONAL all rights reserved. Information, specifications, diagrams, images, and instructions herein are subject to change without notice. ELATION PROFESSIONAL logo and identifying product names and numbers herein are trademarks of ELATION PROFESSIONAL. Copyright protection claimed includes all forms and matters of copyrightable materials and information now allowed by statutory or judicial law or hereinafter granted. Product names used in this document may be trademarks or registered trademarks of their respective companies and are hereby acknowledged. All non-ELATION brands and product names are trademarks or registered trademarks of their respective companies.

ELATION PROFESSIONAL and all affiliated companies hereby disclaim any and all liabilities for property, equipment, building, and electrical damages, injuries to any persons, and direct or indirect economic loss associated with the use or reliance of any information contained within this document, and/or as a result of the improper, unsafe, insufficient and negligent assembly, installation, rigging, and operation of this product.

Elation Professional USA | 6122 S. Eastern Ave. | Los Angeles, CA. 90040

323-582-3322 | 323-832-9142 fax | www.elationlighting.com | info@elationlighting.com

Elation Professional B.V. | Junostraat 2 | 6468 EW Kerkrade, The Netherlands

+31 45 546 85 66 | +31 45 546 85 96 fax | www.elationlighting.eu | info@elationlighting.eu

Elation Professional Mexico | AV Santa Ana 30 | Parque Industrial Lerma, Lerma, Mexico 52000

+52 (728) 282-7070

DOCUMENT VERSION

Due to additional product features and/or enhancements, an updated version of this document may be available online. Please scan the QR Code with your mobile device or visit www.elationlighting.com for the latest revision/update of this manual, before installation and/or programming.

Date	Document Version	SoftwareVersion ≥	DMX Channel Modes	Notes
01/31/2022	1.0	1.0.0	34/44/32/40	Initial Release

CONTENTS

General Information	4
Warranty Returns (USA Only)	5
Safety Guidelines	6
Maintenance Guidelines	8
Overview	9
Colors Temperature Table	10
Virtual Gel Swatch Book Table	10
Gobos & Gobo Wheels	11
Gobo Installation Rotating Gobo Wheel 1 Fixed Gobo Wheel	 12 13
Gobo Dimensions	14
Fan Modes and Low Noise Operation	15
Snoot Installation	16
Installation Guidelines	17
System Menu	21
Dimmer Mode	24
DMX Channel Functions and Values	25
RDM Codes	31
Error Codes	32
Specifications	33
Optional Accessories	36

GENERAL INFORMATION

INTRODUCTION

Please read and understand the instructions in this manual carefully and thoroughly before attempting to operate this device. These instructions contain important safety and use information. For professional use only.

IP65 RATED

An IP rated lighting fixture is one, which is commonly installed in outdoor environments and has been designed with an enclosure that effectively protects the ingress (entry) of external foreign objects such as dust and water. **The International Protection (IP)** rating system is commonly expressed as **"IP"** (Ingress Protection) followed by two numbers (i.e. IP65) where the numbers define the degree of protection. The first digit (Foreign Bodies Protection) indicates the extent of protection against particles entering the fixture and the second digit (Water Protection) indicates the extent of protection against water entering the fixture. An **IP65** rated lighting fixture is one, which has been designed and tested to protect against the ingress of dust **(6)** and low-pressure water jets from any direction **(5)**.

COOLING

After usage, the lamp may be switched off, but the fixture should remain connected to power in order to allow the fan time to cool down the fixture.

UNPACKING

Every device has been thoroughly tested and has been shipped in perfect operating condition. Carefully check the shipping carton for damage that may have occurred during shipping. If the carton is damaged, carefully inspect the device for damage, and be sure all accessories necessary to install and operate the device have arrived intact. In the event damage has been found or parts are missing, please contact our customer support team for further instructions. Please do not return this device to your dealer without first contacting customer support. Please do not discard the shipping carton in the trash. Please recycle whenever possible.

BOX CONTENTS

Omega Brackets (x2)
IP65 Rated Twist-Lock Power Cable

CUSTOMER SUPPORT

Contact ELATION Service for any product related service and support needs.
Also visit forums.elationlighting.com with questions, comments or suggestions.

ELATION SERVICE USA - Monday - Friday 8:00am to 4:30pm PST
323-582-3322 | Fax 323-832-9142 | support@elationlighting.com

ELATION SERVICE EUROPE - Monday - Friday 08:30 to 17:00 CET
+31 45 546 85 63 | Fax +31 45 546 85 96 | support@elationlighting.eu

REPLACEMENT PARTS please visit parts.elationlighting.com

WARRANTY RETURNS (USA ONLY)

To obtain warranty service, a Return Materials Authorization (RMA) number must first be obtained from ELATION. It is the Customer's responsibility to provide product proof of purchase and serial number by acceptable evidence such as an invoice copy or an approved ELATION Extended Warranty Certificate ("EWC") and any relevant maintenance records at the time warranty service is sought. Failure to provide acceptable evidence of product proof of purchase or EWC and any relevant maintenance records may be cause for denial of warranty service.

Products returned for warranty service must be sent without any accessories (i.e., power, data, and safety cables, brackets, clamps, rigging hardware, frost filters, gel frames, barn doors, lens, hoses, nozzles, rack mounting hardware, etc.), must be boxed using the original and/or suitable packaging materials (double-box and foam) that provides ample product protection for ground and/or air freight transit, and must be shipped freight pre-paid and insured to ELATION in Los Angeles, CA or an ELATION Authorized Service Center. The RMA number must be clearly written on the outside of the return box, and a brief description of the problem and the RMA number must be documented and included in the box.

Products returned for warranty service without an RMA number clearly marked on the outside of the package will be refused and returned to the shipper at the Customer's expense. Products returned for warranty service, which are received damaged due to inadequate and/or improper packaging and/or due to damage caused by shipping carrier, may incur additional repair charges before warranty service begins and/or may void this warranty. If any product accessories (included and/or optional) are shipped with the product, ELATION and/or the ELATION Authorized Service Center shall have no liability what so ever for the loss and/or damage to any such accessories, nor the safe return thereof. If the requested warranty repairs or service (including parts replacement) are within the terms of this warranty, ELATION will pay return ground transportation shipping charges to a single designated point within the United States.

SAFETY GUIDELINES

This fixture is a sophisticated piece of electronic equipment. To guarantee a smooth operation, it is important to follow all instructions and guidelines in this manual. Elation Professional is not responsible for injury and/or damages resulting from the misuse of this fixture due to the disregard of the information printed in this manual. Only qualified and/or certified personnel should perform installation of this fixture and only the original rigging parts (omega brackets) included with this fixture should be used for installation. Any modifications to the fixture and/or the included mounting hardware will void the original manufactures warranty and increase the risk of damage and/or personal injury.



PROTECTION CLASS 1 - FIXTURE MUST BE PROPERLY GROUNDED.



**THERE ARE NO USER SERVICEABLE PARTS INSIDE THIS UNIT.
DO NOT ATTEMPT ANY REPAIRS YOURSELF; DOING SO WILL VOID YOUR MANUFACTURER'S WARRANTY. DAMAGES RESULTING FROM MODIFICATIONS TO THIS FIXTURE AND/OR THE DISREGARD OF SAFETY INSTRUCTIONS AND GUIDELINES IN THIS MANUAL VOID THE MANUFACTURE'S WARRANTY AND ARE NOT SUBJECT TO ANY WARRANTY CLAIMS AND/OR REPAIRS.**



**DO NOT PLUG FIXTURE INTO A DIMMER PACK!
NEVER OPEN THIS FIXTURE WHILE IN USE!
UNPLUG POWER BEFORE SERVICING FIXTURE!
NEVER TOUCH FIXTURE DURING OPERATION, AS IT MAY BE HOT!
KEEP FLAMMABLE MATERIALS AWAY FROM FIXTURE!**

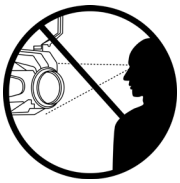

**NEVER LOOK DIRECTLY INTO THE LIGHT SOURCE!
RETINA INJURY RISK - MAY INDUCE BLINDNESS!
SENSITIVE PERSONS MAY SUFFER AN EPILEPTIC SHOCK!**



**INDOOR / DRY LOCATIONS USE ONLY!
DO NOT EXPOSE FIXTURE TO RAIN AND MOISTURE!**



**MINIMUM DISTANCE TO OBJECTS/SURFACES
MUST BE 65.6 FEET (20 METERS)
MAXIMUM TEMP OF EXTERNAL SURFACE 185° F (85°C)
MINIMUM DISTANCE OF INFLAMMABLE MATERIALS
FROM THE SURFACE 1.6 FEET (0.5 METER)**

SAFETY GUIDELINES

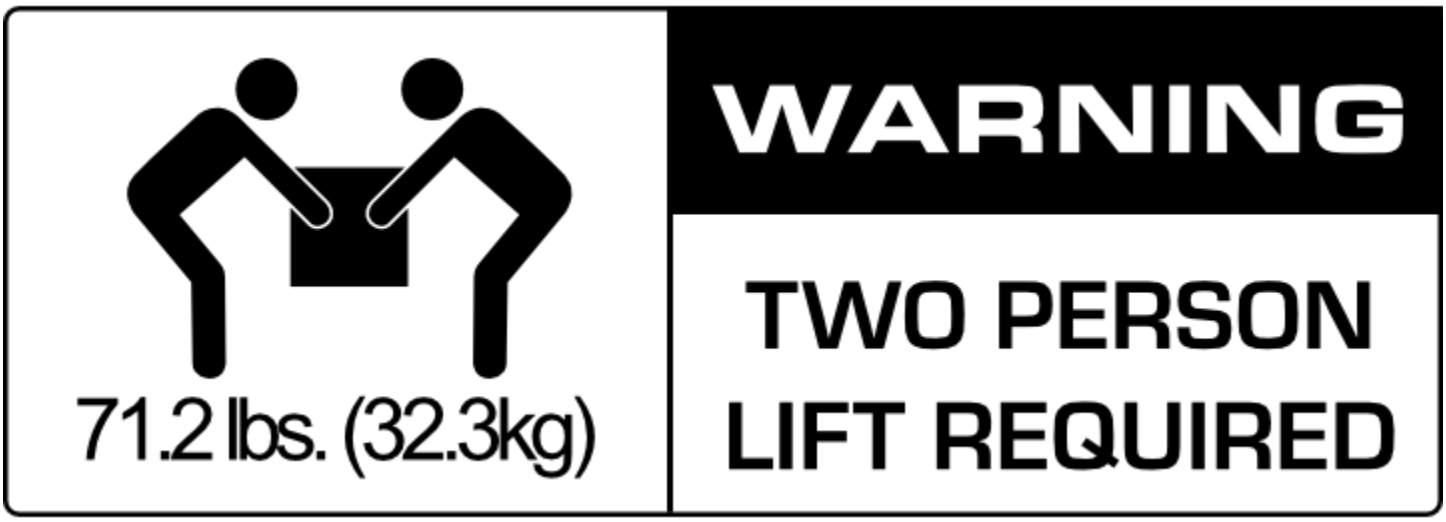

⚠CAUTION

HIGH INTENSITY ULTRAVIOLET LIGHT



AVOID DIRECT EYE & SKIN EXPOSURE.
WEAR PROPER EYE & SKIN PROTECTION.
SEE MANUAL FOR SAFETY INSTRUCTIONS.

RISK GROUP 3 - RISK OF EXPOSURE TO ULTRAVIOLET UV RADIATION! FIXTURE EMITS HIGH INTENSITY WAVELENGTH OF ULTRAVIOLET UV LIGHT FROM THE UV COLOR FILTER. WEAR PROPER EYE AND SKIN PROTECTION. AVOID PROLONGED PERIODS OF EXPOSURE TO UV COLOR FILTER. AVOID WEARING WHITE COLOR CLOTHING AND/OR USING UV PAINTS ON SKIN. AVOID DIRECT EYE AND/OR SKIN EXPOSURE AT DISTANCES LESS THAN 65.6 feet (20m). DO NOT OPERATE FIXTURE WITH DAMAGED/MISSING EXTERNAL COVERS. DO NOT LOOK DIRECTLY INTO THE UV LIGHT AND/OR VIEW UV LIGHT DIRECTLY WITH OPTICAL INSTRUMENTS THAT MAY CONCENTRATE THE LIGHT/RADIATION OUTPUT. INDIVIDUALS SUFFERING FROM A RANGE OF EYE CONDITIONS, SUNLIGHT EXPOSURE DISORDERS, OR INDIVIDUALS USING PHOTOSENSITIVE MEDICATION, MAY RECEIVE DISCOMFORT IF EXPOSED TO THE ULTRAVIOLET UV LIGHT EMITTED FROM THE UV LED.

DO NOT TOUCH the fixture housing during operation. Turn OFF the power and allow approximately 15 minutes for the fixture to cool down before serving.

DO NOT shake fixture, avoid brute force when installing and/or operating fixture.

DO NOT operate fixture if the power cord is frayed, crimped, damaged and/or if any of the power cord connectors are damaged and do not insert into the fixture securely with ease. NEVER force a power cord connector into the fixture. If the power cord or any of its connectors are damaged, replace it immediately with a new one of similar power rating.

DO NOT block any air ventilation slots.

All fan and air inlets must remain clean and never blocked.

Allow approx. 6" (15cm) between fixture and other devices or a wall for proper cooling.

Always disconnect fixture from main power source before performing any type of service and/or cleaning procedure. Only handle the power cord by the plug end, never pull out the plug by tugging the wire portion of the cord.

During the initial operation of this fixture, a light smoke or smell may emit from the interior of the fixture. This is a normal process and is caused by excess paint in the interior of the casing burning off from the heat associated with the lamp and will decrease gradually over time.

Consistent operational breaks will ensure fixture will function properly for many years.

ONLY use the original packaging and materials to transport the fixture in for service.

MAINTENANCE GUIDELINES



DISCONNECT POWER BEFORE PERFORMING ANY MAINTENANCE!

CLEANING

Frequent cleaning is recommended to insure proper function, optimized light output, and an extended life. The frequency of cleaning depends on the environment in which the fixture operates: damp, smoky or particularly dirty environments can cause greater accumulation of dirt on the fixture's optics. Clean the external lens surface at least every 20 days with a soft cloth to avoid dirt/debris accumulation.
NEVER use alcohol, solvents, or ammonia-based cleaners.

MAINTENANCE

Regular inspections are recommended to insure proper function and extended life.

There are no user serviceable parts inside this fixture, please refer all other service issues to an authorized Elation service technician. Should you need any spare parts, please order genuine parts from an authorized Elation dealer.

Please refer to the following points during routine inspections:

A detailed electric check by an approved electrical engineer every three months, to make sure the circuit contacts are in good condition and prevent overheating.

Be sure all screws and fasteners are securely tightened at all times. Lose screws may fall out during normal operation resulting in damage or injury as larger parts could fall.

Check for any deformations on the housing, color lenses, rigging hardware and rigging points (ceiling, suspension, trussing). Deformations in the housing could allow for dust to enter into the fixture. Damaged rigging points or unsecured rigging could cause the fixture to fall and seriously injure a person(s).

Electric power supply cables must not show any damage, material fatigue or sediments.

NEVER remove the ground prong from the power cable.

FIXTURE DISASSEMBLY

The following points should be observed after performing any maintenance procedure that requires disassembly of the unit:

- **After the unit has been reassembled, open the valve, and allow the light to run for approximately 2 hours in order to dry out any moisture that has been trapped inside the fixture. The process should continue until indicated humidity drops below 15% for the head and 30% for the base.**
- **Once this has been achieved, the light can be switched off, but the unit should remain connected to power so that the cooling fan can cool down the unit. Please note that allowing cool down time should ALWAYS be done after lamp operation.**
- **Some units may require partial disassembly in order to gain access to the valve. Please contact Elation service for information regarding the location and access procedure for the valve on your specific unit model.**

OVERVIEW

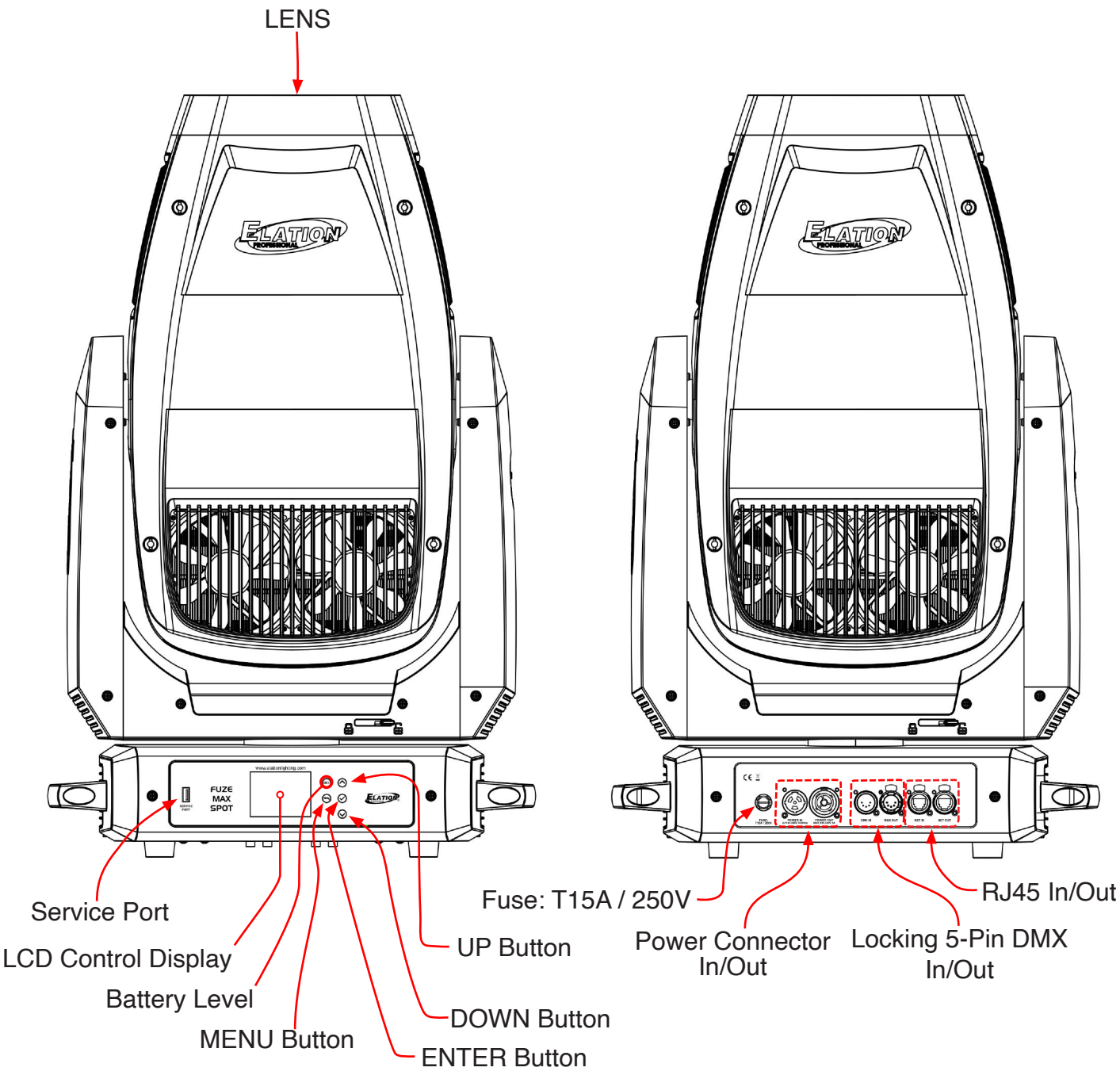
LENS
FUZE
MAX
SPOT
Service Port
LCD Control Display
Battery Level
MENU Button
UP Button
DOWN Button
ENTER Button
Fuse: T15A / 250V
Power Connector
In/Out
Locking 5-Pin DMX
In/Out
RJ45 In/Out

COLORS

Colors	Color Temperature	Green Shift
Cyan	2700K – 8500K	Full Minus Green to Neutral
Magenta		
Yellow		
Red		Neutral White
Green		
Blue		Neutral to Full Plus Green
Mint		
Amber		

VIRTUAL GEL SWATCH BOOK COLORS								
Value	Filter Number	Name	Value	Filter Number	Name	Value	Filter Number	Name
1	7	Pale Yellow	21	157	Pink	41	68	Sky Blue
2	103	Straw	22	36	Medium Pink	42	143	Pale Navy Blue
3	151	Gold Tint	23	111	Dark Pink	43	131	Marine Blue
4	100	Spring Yellow	24	128	Bright Pink	44	115	Peacock Blue
5	10	Medium Yellow	25	148	Bright Rose	45	172	Lagoon Blue
6	101	Yellow	26	332	Special Rose Pink	46	116	Medium Blue Green
7	104	Deep Amber	27	793	Vanity Fair	47	90	Dark Yellow Green
8	15	Deep Straw	28	113	Magenta	48	139	Primary Green
9	179	Loving Amber	29	46	Dark Magenta	49	122	Fern Green
10	21	Gold Amber	30	48	Rose Purple	50	89	Moss Green
11	105	Orange	31	126	Mauve	51	124	Dark Green
12	158	Deep Orange	32	49	Medium Purple	52	88	Lime Green
13	22	Dark Amber	33	58	Lavender	53	138	Pale Green
14	778	Millennium Gold	34	199	Palace Blue	54	203	Quarter CT Blue
15	135	Deep Golden Amber	35	119	Dark Blue	55	202	Half CT Blue
16	24	Scarlet	36	132	Medium Blue	56	201	FULL CT Blue
17	106	Primary Red	37	120	Deep Blue	57	200	Double CT Blue
18	26	Bright Red	38	165	Daylight Blue	58	206	Quarter CT Orange
19	27	Medium Red	39	161	Slate Blue	59	205	Half CT Orange
20	19	Fire	40	118	Light Blue	60	204	FULL CT Orange

GOBOS & GOBO WHEELS

ROTATING GOBO WHEEL 1

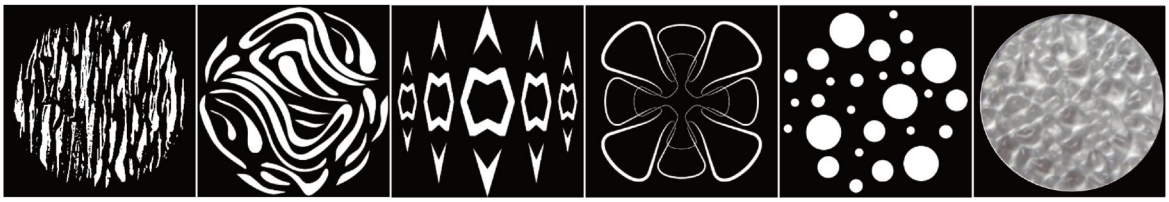

Pos. 1 Pos. 2 Pos. 3 Pos. 4 Pos. 5 Pos. 6

ROTATING GOBO WHEEL 2

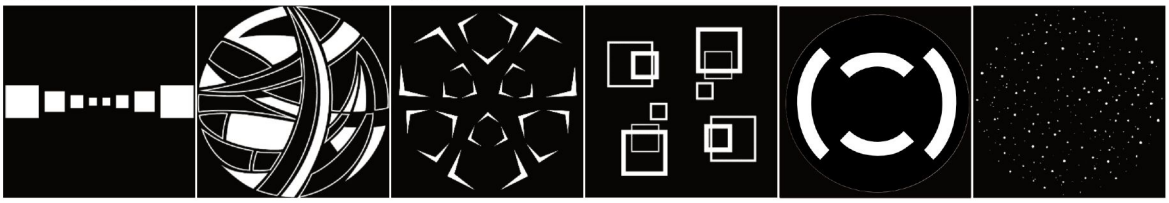

Pos. 1 Pos. 2 Pos. 3 Pos. 4 Pos. 5 Pos. 6

FIXED GOBO WHEEL 1

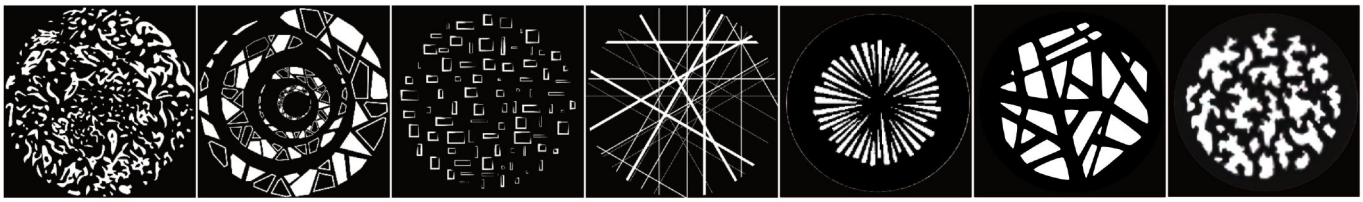

Pos. 1 Pos. 2 Pos. 3 Pos. 4 Pos. 5 Pos. 6 Pos. 7

BI-DIRECTIONAL ANIMATION WHEEL

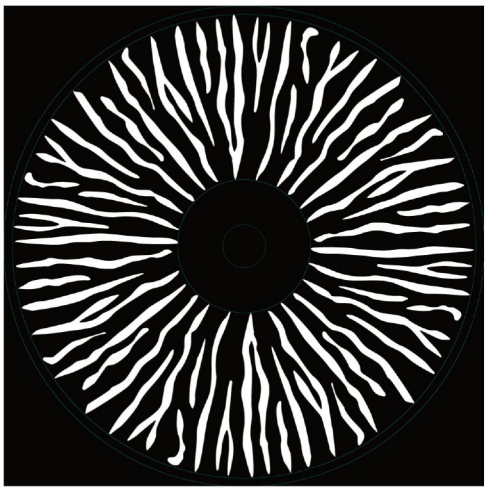

GOBO INSTALLATION - ROTATING GOBO WHEEL 1

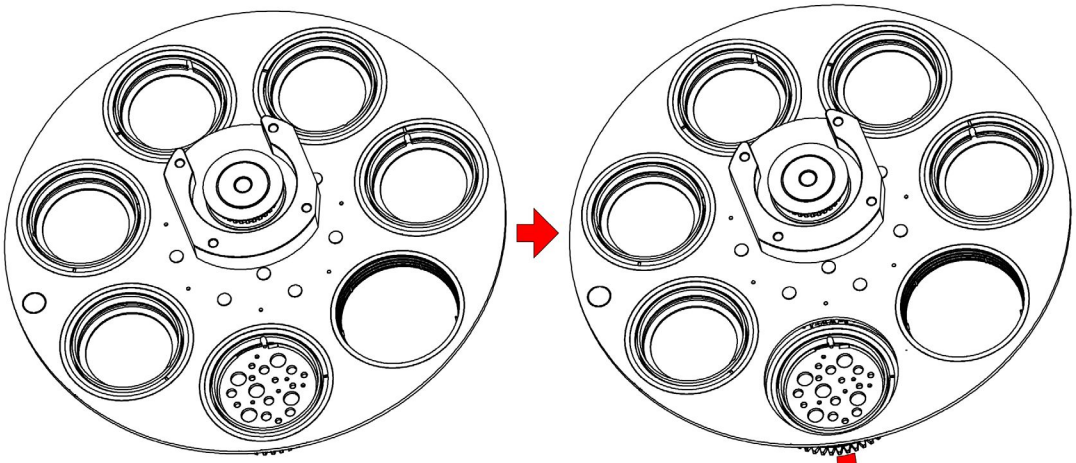

Locate the Rotating GOBO being replaced. Carefully press the GOBO Holder down, then pull it out and away until it fully clears the Fixed GOBO Wheel.

Locate the tab of the Retention Spring, and with a precision pick (or similar tool), carefully press the Retaining Spring inward to relieve the tension. Remove the retaining spring and carefully separate the GOBO from the GOBO Holder.

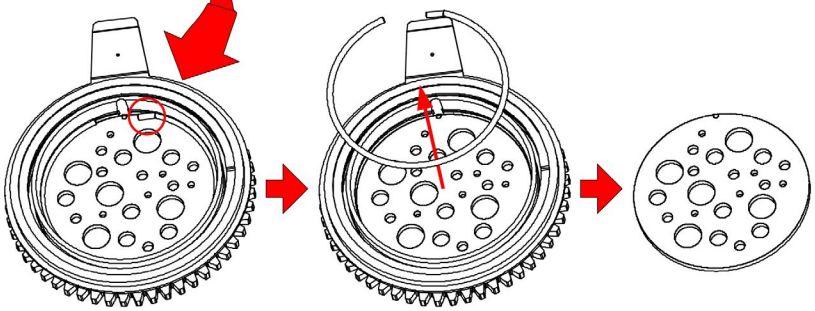

CAUTION: TAKE CARE NOT TO SCRATCH GOBO OR GOBO HOLDER

To ensure proper Gobo orientation on the Rotating Gobo Wheel, align the Alignment Indices before installing the Retention Spring. These indices are the notch in the Gobo Holder, the dot on the top and bottom of the Gobo Holder Retention Tab, and the Gobo itself.

Alignment Indices

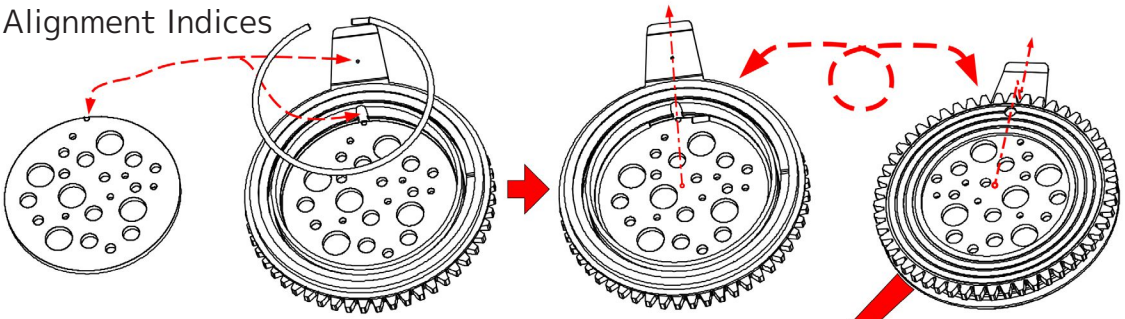

Note that the Gobo Holder straddles the Rotating Gobo Wheel in the Gobo Holder Slot, with the gearing on one side, and the Retention Tab is on the other.

Rotate the Gear of the Rotating Gobo Wheel until the Gear Alignment Dot on the bottom of the Rotating Gobo Wheel is lined up with the empty Gobo Holder Slot. Install the Gobo Holder Tab into the Gobo Holder Tab Receptacle and press until the Gobo Holder gently springs into the empty Gobo Holder Slot.

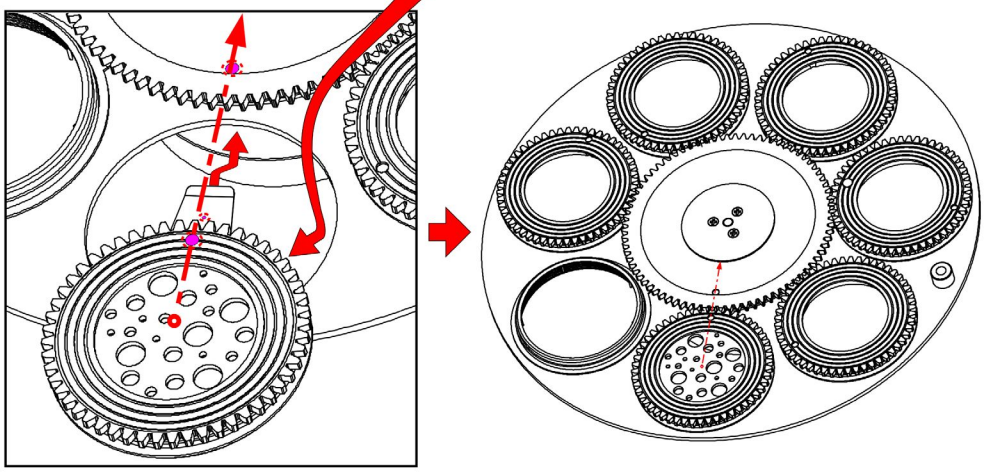

GOBO INSTALLATION - FIXED GOBO WHEEL

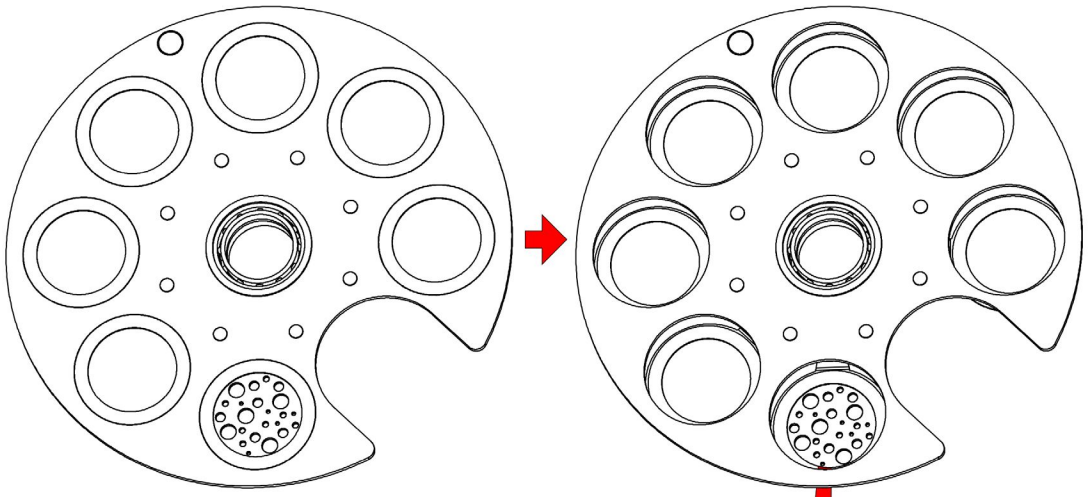

Locate the Fixed Gobo being replaced. Carefully press the Gobo Holder down, then pull it out and away until it fully clears the GOBO Wheel.

Locate the tab of the Retention Spring, and with a precision pick (or similar tool), carefully press the Retention Spring inward to relieve the tension. Remove the retaining spring and carefully separate the GOBO from the GOBO Holder.

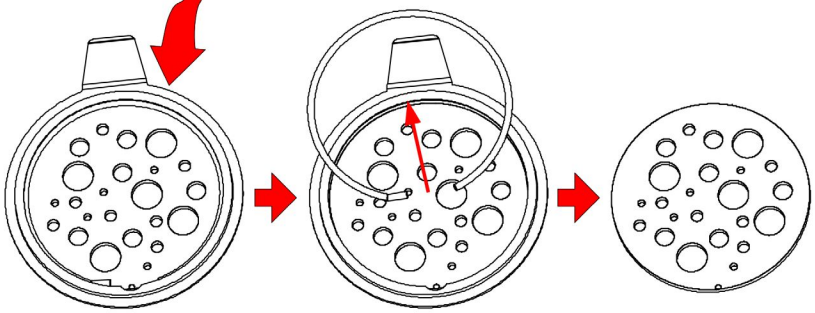

CAUTION: TAKE CARE NOT TO SCRATCH GOBO OR GOBO HOLDER

To ensure proper Gobo orientation on the Fixed Gobo Wheel, align the orientation indices before installing the Retention Spring. These indices are the notch in the Gobo Holder and the dot on the Gobo itself.

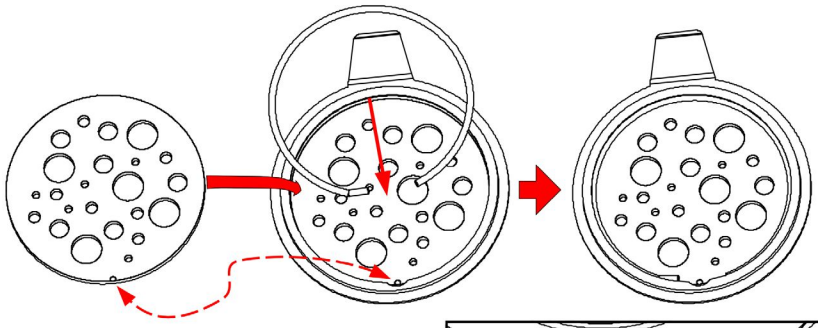

Note that the Gobo Holder does not straddle the Fixed Gobo Wheel in the Gobo Holder Slot.The the Retention Tab is on same side as the Gobo Holder.

Install the Gobo Holder Tab into the Gobo Holder Tab Receptacle and press until the Gobo Holder gently springs into the empty Gobo Holder Slot.

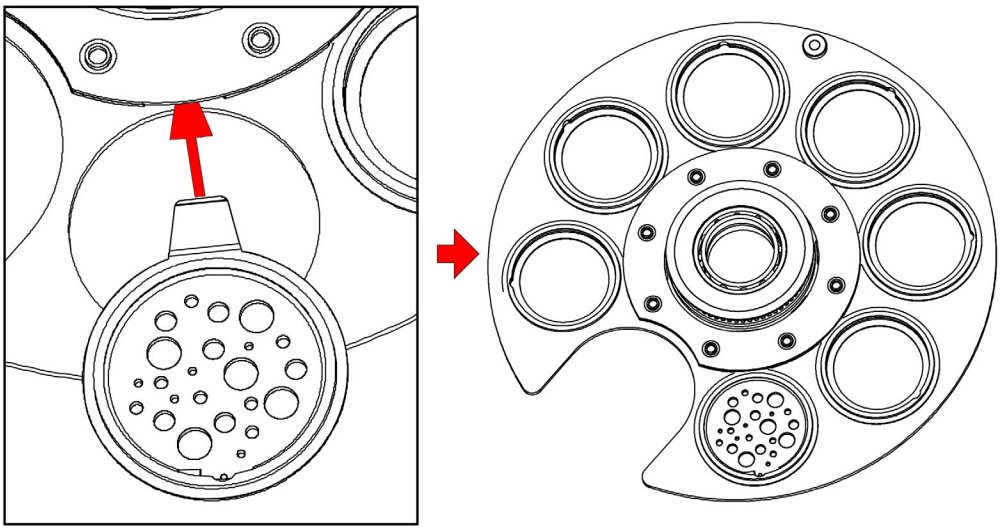

GOBO DIMENSIONS

Gobos for Rotating Gobo Wheel and Static Gobo Wheel

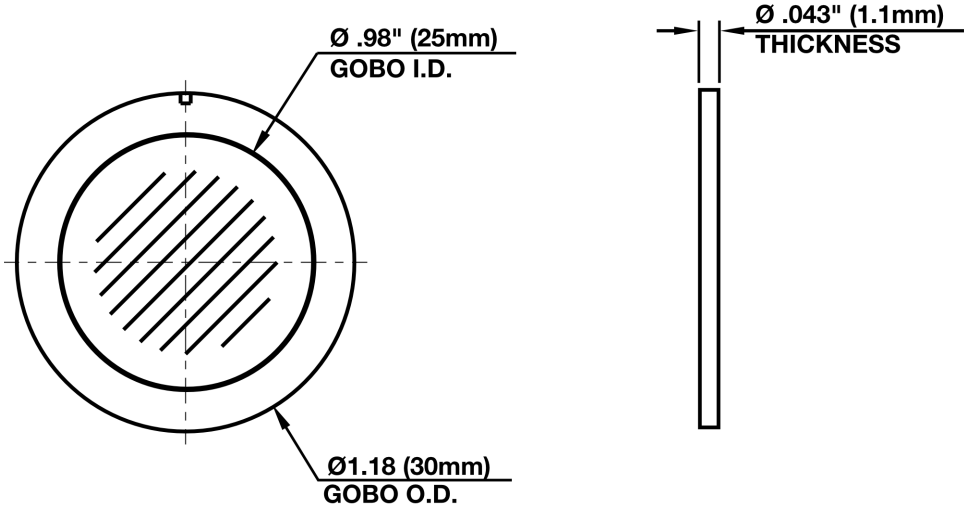

Please be aware of the intended position and correct sizing requirements of custom gobos.

*** * * IMPORTANT NOTICE REGARDING CUSTOM GOBOS * * ***

Due to the high temperature optical system, special glass material is required for custom gobos. Due to varying manufacturing processes and tolerances, it is highly recommended to provide a gobo sample and holder from the fixture to the custom gobo vendor for accurate sizing. Extended testing of custom gobo designs is highly recommended prior to use. Contact ELATION SERVICE for further information.

ELATION SERVICE USA -Monday -Friday 8:00am to 4:30pm PST
323-582-3322 | Fax 323-832-9142 | support@elationlighting.com

ELATION SERVICE EUROPE -Monday -Friday 08:30 to 17:00 CET
+31 45 546 85 63 | Fax +31 45 54685 96 | support@elationlighting.eu

FAN MODES AND LOW NOISE OPERATION

This fixture is a high-performance fixture suited for many applications. For noise critical environments like Theater, Opera or Orchestra Halls, it offers various operation modes to remove any distraction for the audience and performers. Modes can be changed remotely via the DMX control channel, allowing the fixture to offer high output or whisper silent operation at a moment's notice. All modes smoothly transition over a brief period, preventing unwanted attraction to the fixture.

Mode	dbA at 1m LED off	dbA at 1m Dimmer 100%
Ambient Noise Level 31 dbA		
Fan Control - Auto (Default)	39	47
Fan Control - Low	37	42
Fan Control - High	40	55
Low Noise - Mute	31	31
Low Noise - Studio	34	37

Fan Modes

Auto – The default AUTO mode ensures optimal performance of the fixture. Fans only run at the speeds needed to keep the LED engine within a safe temperature range. They will turn off if possible, for example when the fixture is dimmed to a low intensity. Fans sense the ambient and fixture temperature, and will at all times try to keep noise levels at a minimum. The fixture output will only reduce when the LED engine cannot be cooled down to its safe operating range due to high ambient temperature. **Auto is the recommend mode for daily operation of the Fuze Max Spot.**

Low – In this mode the fixture reduces fan speeds throughout for a lower noise profile of the fixture. This mode should be sufficient for most uses where lower noise is required. The fixture output is reduced to about 80%.

High – This mode is only required in very high ambient temperatures when automatic fan speed adjustments are not desired. High Fan Speed will cool the fixture most efficiently. This mode will increase wear on the fans and should only be utilized in exceptional circumstances. Fans will always run, even if the fixture is dimmed. Fixture output is kept at 100% unless the LED engine temperature is too high, at which point the fixture will reduce power carefully to ensure safe operation.

Low Noise Modes

For very critical situations, this unit offers two additional low noise modes for silent operation. The fixture output will be reduced, but as the fixture has such an extremely high luminous flux, it still offers outstanding performance. In low noise modes, all parameters of the fixture operate quieter and with reduced speeds.

Studio – This mode reduces the fixture output to approximately 50%. Almost all fans inside the fixture are turned off, and only run when absolutely necessary to keep the fixture at 50% LED power.

Mute – Running the fixture in MUTE mode reduces the fixture to about 25% output, and all fans are off. The fixture is totally silent.

SNOOT INSTALLATION

1. Place fixture on the stable flat surface and let cool for 15mins.
2. Place snoot onto front lens so snoot screw holes match screw holes on lens.
3. Carefully, using a hand screwdriver, secure 4 screws (included).
4. Check Snoot to confirm it is seated properly, and all 4 screws are secure.

DO NOT OVER TIGHTEN SCREWS! DO NOT USE A POWER SCREWDRIVER!

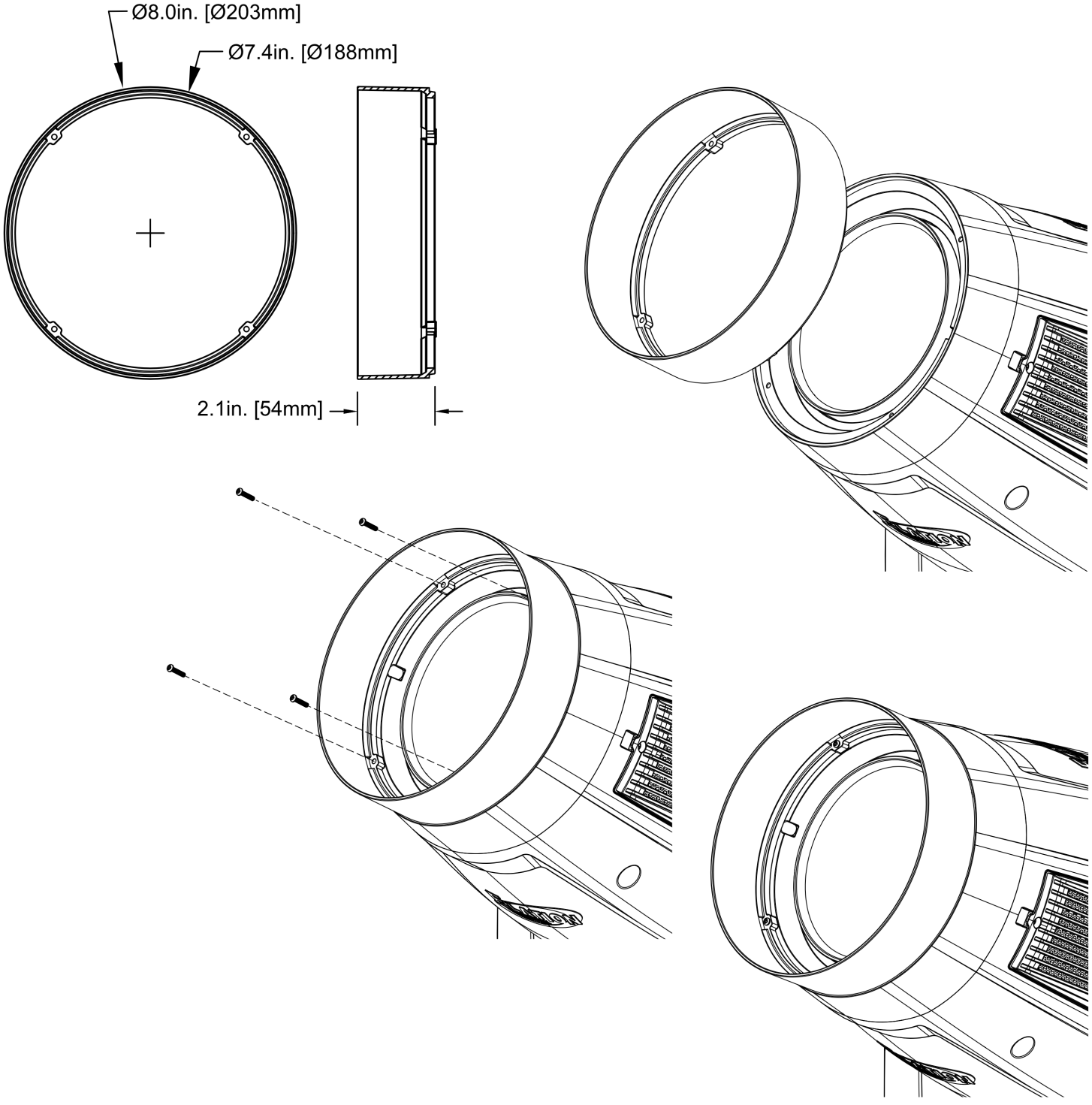

INSTALLATION GUIDELINES



FLAMMABLE MATERIAL WARNING
Keep fixture minimum 5.0 feet (1.5m) away from flammable materials and/or pyrotechnics.



ELECTRICAL CONNECTIONS
A qualified electrician should be used for all electrical connections and/or installations.



USE CAUTION WHEN POWER LINKING OTHER MODEL FIXTURES AS THE POWER CONSUMPTION OF OTHER MODEL FIXTURES MAY EXCEED THE MAX POWER OUTPUT ON THIS FIXTURE. CHECK SILK SCREEN FOR MAX AMPS.



MINIMUM DISTANCE TO OBJECTS/SURFACES MUST BE 1.6 FOOT (0.5 METERS)



MINIMUM DISTANCE OF INFLAMMABLE MATERIALS FROM THE SURFACE 1.6 FEET (0.5 METER)



MAXIMUM AMBIENT TEMPERATURE 194° F (90°C)



DO NOT INSTALL THE FIXTURE IF YOU ARE NOT QUALIFIED TO DO SO!

Fixture MUST be installed following all local, national, and country commercial electrical and construction codes and regulations.

Before rigging/mounting the fixture to any metal truss/structure or placing the fixture on any surface, a professional equipment installer MUST be consulted to determine if the metal truss/structure or surface is properly certified to safely hold the combined weight of the fixture, clamps, cables, and accessories.

Overhead rigging requires extensive experience, including, amongst others, calculating working load limits, installation material being used, and periodic safety inspection of all installation material and the fixture. If you lack these qualifications, do not attempt the installation yourself. Improper installation can result in bodily injury.

Fixture ambient operating temperature range is **14° to 113°F. (-10° to 45°C)**
Do not use the fixture under or above this temperature.

Fixture should be installed in areas outside walking paths, seating areas, or away from areas were unauthorized personnel might reach the fixture by hand.

NEVER stand directly below the fixture when rigging, removing or servicing.
Overhead fixture installation must always be secured with a secondary safety attachment, such as an appropriately rated safety cable.

Allow approximately 10 minutes for the fixture to cool down before serving.

INSTALLATION GUIDELINES

OMEGA BRACKETS WITH CLAMP INSTALLATION

When mounting the fixture to a truss, be sure to secure an appropriately rated professional grade rigging clamp to the included **Omega Brackets** using an M10 screw fitted through the center hole of the **Omega Brackets**. Insert the Omega Brackets into the matching holes on the bottom of the fixture. Secure the Omega Brackets to the fixture by turning each quick-lock fastener ¼ turn clockwise; making sure the fastener is completely locked. Omega Brackets can be installed into the fixture base as illustrated below.

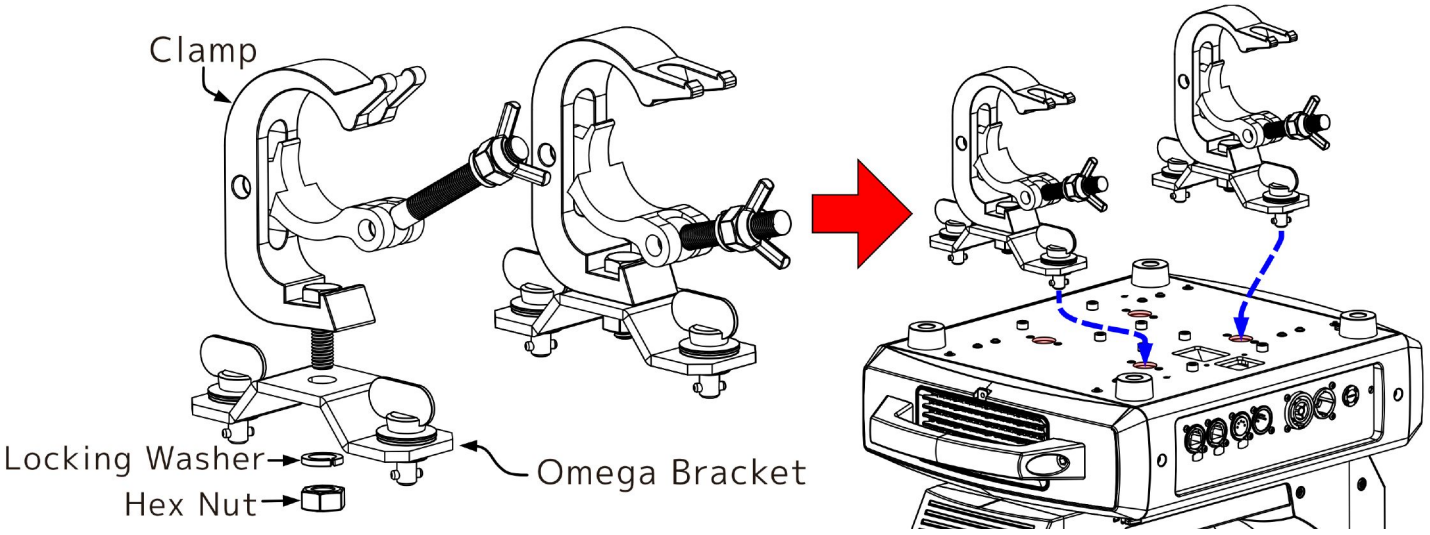

SAFETY CABLE

ALWAYS ATTACH AN APPROPRIATELY RATED SAFETY CABLE WHENEVER INSTALLING THIS FIXTURE IN A SUSPENDED ENVIRONMENT TO ENSURE THE FIXTURE WILL NOT FALL IF THE CLAMP FAILS.

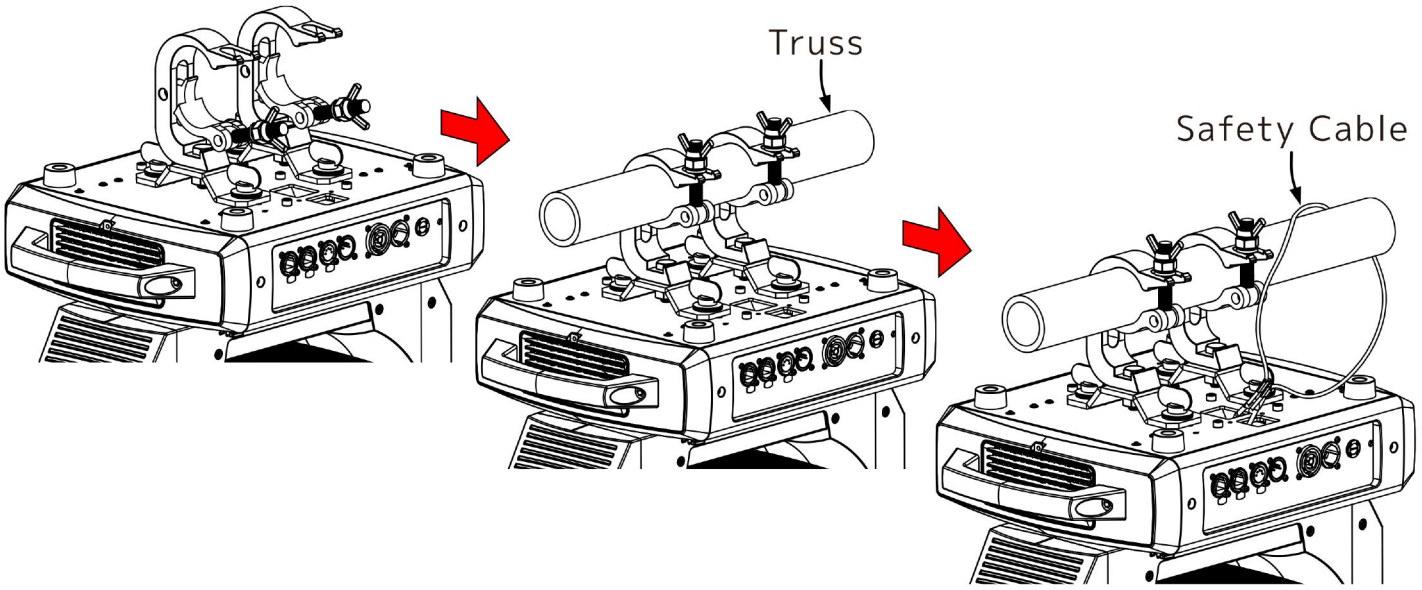

RIGGING

Overhead rigging requires extensive experience, including among others, calculating working load limits, installation material being used, and periodic safety inspection of all installation material and the fixture. If you lack these qualifications, do not attempt the installation yourself. Improper installation can result in bodily injury. The fixture provides a built-in rigging point for a **SAFETY CABLE** (not included). Be sure to only use one of the designated rigging point for the safety cable and never secure a safety cable to a carrying handle. Connect the safety cable to the attachment point and route it around the truss.

INSTALLATION GUIDELINES

FIXTURE INSTALLATION

The Elation Fuze Max Spot is fully operational in three different mounting positions, hanging upside-down, mounted sideways on trussing, or set on a flat level surface. Be sure this fixture is kept at least 0.2m (7.9in.) away from any flammable materials (decoration etc.). Always use and install the supplied safety cable as a safety measure to prevent accidental damage and/or injury in the event the clamp fails. Never use the carrying handles for secondary attachment.

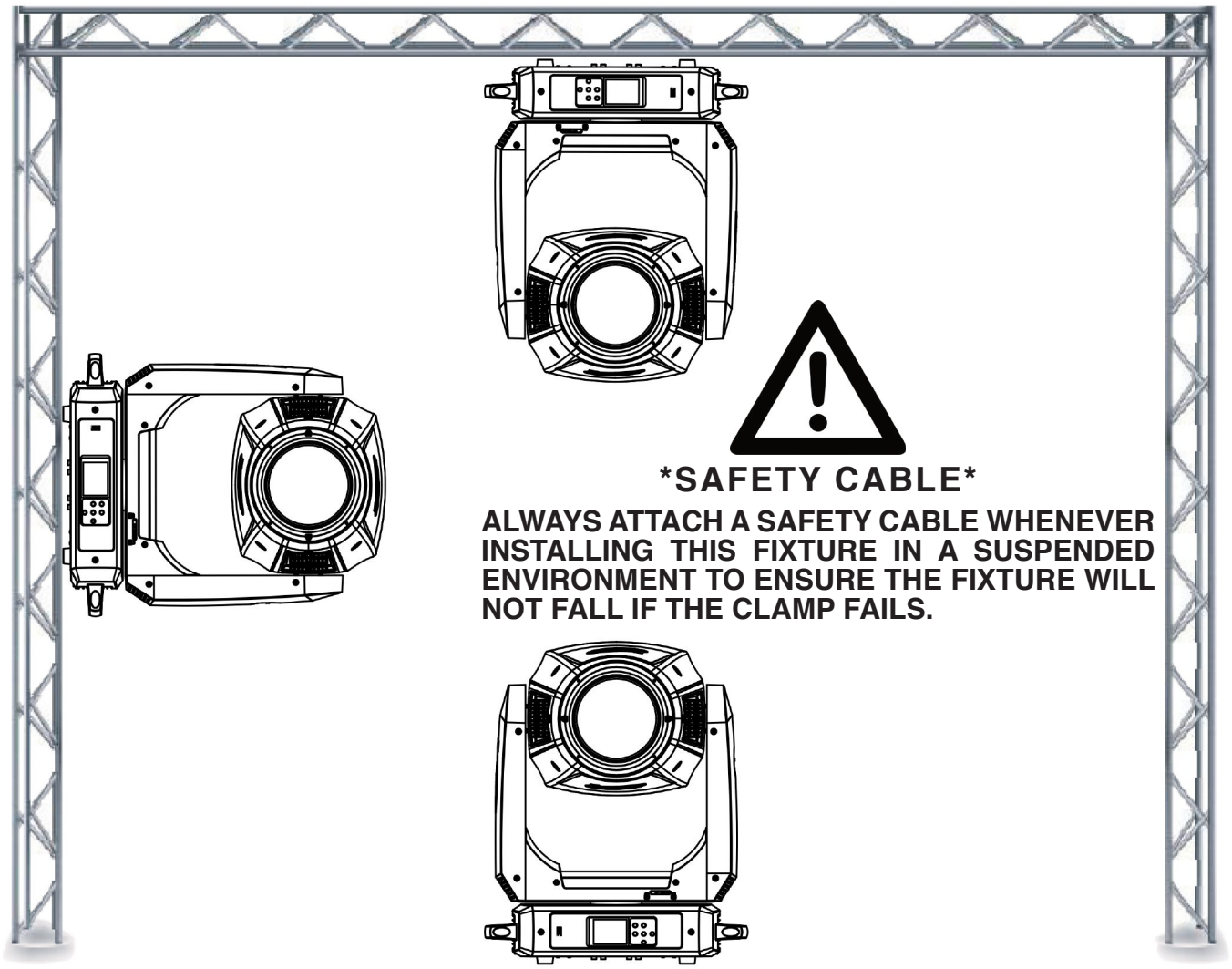

ART-NET | sACN CONNECTION

When connecting fixture to a network switch to control multiple devices, a **Gigabit Ethernet Switch** that supports **IGMP (Internet Group Management Protocol)** is required. Using a **Gigabit Ethernet Switch** that does not support **IGMP** can cause erratic behavior of all connected devices to the switch. Click link below for more information about IGMP.

https://en.wikipedia.org/wiki/Internet_Group_Management_Protocol

INSTALLATION GUIDELINES

POTENTIAL INTERNAL FIXTURE DAMAGE FROM EXTERNAL SOURCES OF LIGHT BEAMS

External sources of light beams from direct sunlight, lighting moving head fixtures, and lasers, which are focused directly towards the exterior housing and/or penetrate the front lens opening of ELATION lighting fixtures, can cause severe internal damage including burning to optics, dichroic color filters, glass and metal gobos, prisms, animation wheels, frost filters, iris, shutters, motors, belts, wiring, discharge lamps, and LEDs.

This issue is not specific only to ELATION lighting fixtures, it is a common issue with lighting fixtures from all manufacturers. Although there is no true way to fully prevent this issue from happening, the guidelines below can prevent any potential damage from occurring if followed. Contact ELATION Service for more details.

DO NOT EXPOSE THE FIXTURE AND/OR FRONT LENS OPENING TO LIGHT BEAMS FROM DIRECT SUNLIGHT, OTHER LIGHTING MOVING HEAD FIXTURES, AND LASERS WHILE UNPACKING, INSTALLATION, USE, AND EXTENDED IDLE TIMES OUTDOORS. DO NOT FOCUS A LIGHT BEAM FROM ONE LIGHTING FIXTURE DIRECTLY TOWARDS ANOTHER.

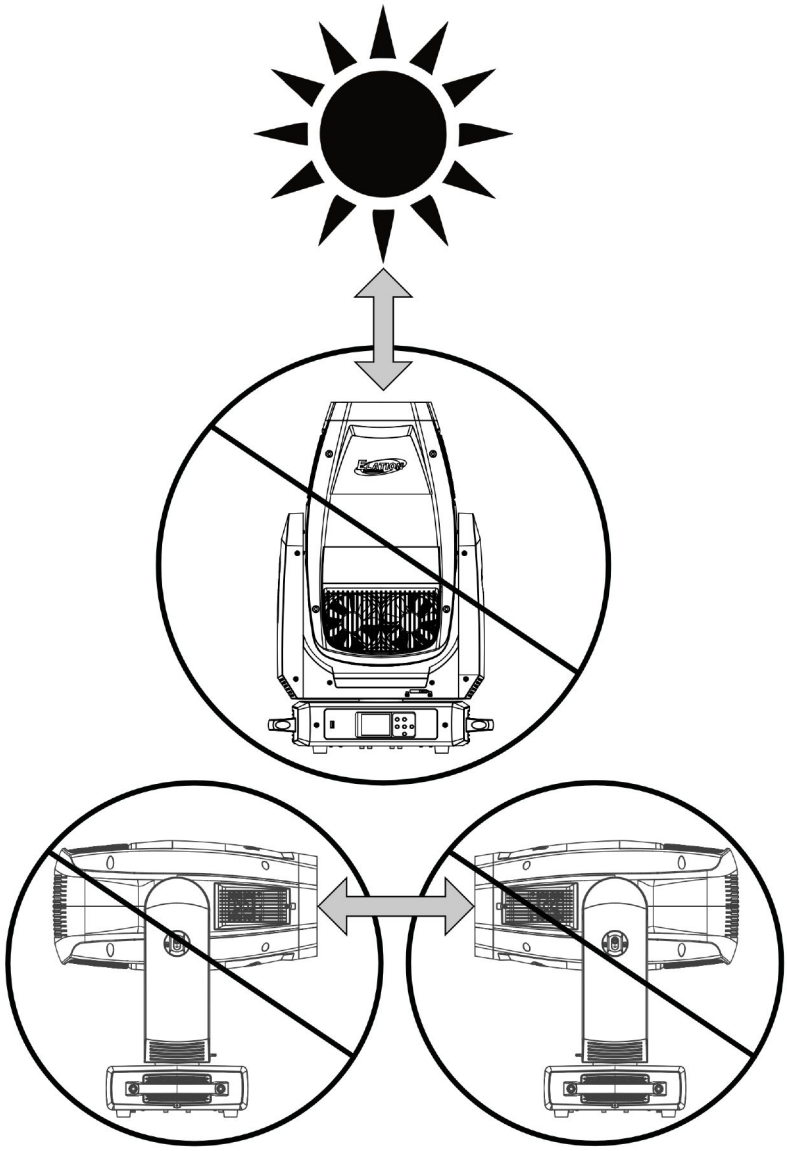

SYSTEM MENU

The fixture includes an easy to navigate system menu. The control panel (see image below) located on the front of the fixture, provides access to the main system menu and is where all necessary system adjustments are made to the fixture. During normal operation, pressing **MODE/ESC** button once will access the fixture's main menu. Once in the main menu you can navigate through the different functions and access the sub-menus with the **UP**, **DOWN**, **RIGHT**, and **LEFT** buttons. Once you reach a field that requires adjusting, press the **ENTER** button to activate that field and use the **UP** and **DOWN** buttons to adjust the field. Pressing the **ENTER** button once more will confirm your setting. You may exit the main menu at any time without making any adjustments by pressing the **MODE/ESC** button.

NOTE: To access the LCD Menu Control Display via the internal battery, press and hold the **MODE/ESC** button for 10 seconds. The LCD Menu Control Display will shut **OFF** automatically about 1 minute from the last button press.

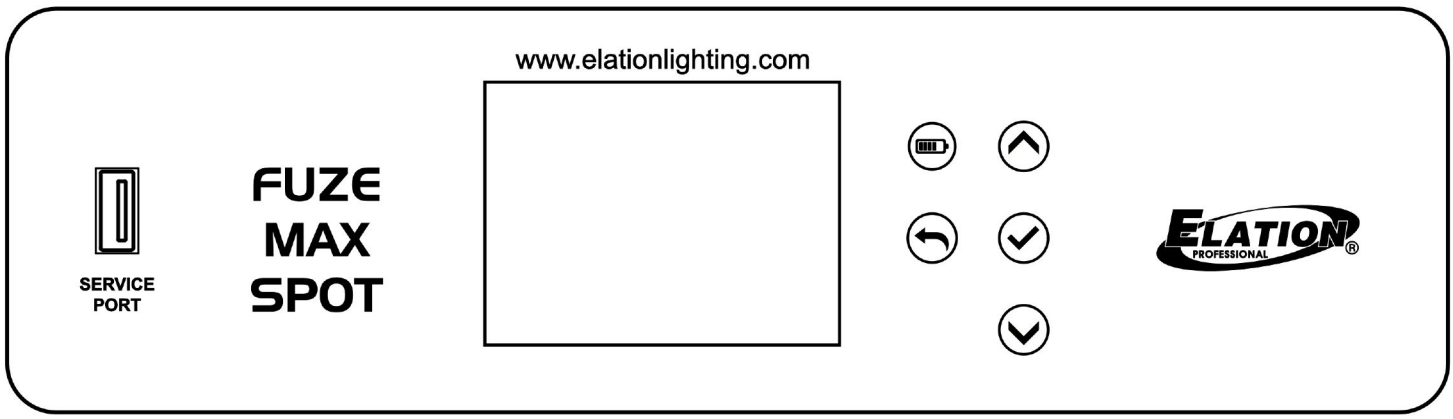

SYSTEM MENU

ELATION FUZE MAX SPOT					
Supports Software Versions: ≥ 1.0.0					
MAIN MENU	**OPTIONS / VALUES** (Default Settings in **BOLD**)				**DESCRIPTION**
DMX SETTINGS	Dmx Presets	**A001**~AXXX			
	DMX Channel Mode	**Standard**, Extend, CMY , CMY Extend			
	No DMX Status	**Hold Last**, Blackout, Internal Program			
Personality	Primary	ON/**OFF**			
	Secondary	**ON**/OFF			
	Status	Pan Invert	ON/**OFF**		
		Tilt Invert	ON/**OFF**		
		Pan/Tilt Feedback	ON/**OFF**		
		Pan Degree	630/**540**		
		Pan/TiltSpeed	**Speed 1**~ 4		
		Hibernation	**OFF**, 01M~99M, 15M		
		Follow Spot Mode	ON/**OFF**		
	Fixture ID	Service PIN	Password=xxx		
		Universe	000		
		Unit IP Addr	2.XXX.XXX.2		
		Mask Addr	255.XXX.XXX.XXX		
	ProtocolSet	**Artnet**/sACN			
	KlingNet	Off/**On**			
	Net Switch	Off/**On**			
	Fan Settings	**Auto**, High, Low, Studio			
	Dim Mode	Standard, Stage, TV, Architectural, Theatre, Stage 2			
		Dim Speed	0S~10S		
	Dim Curves	**Linear**, Square, Square Inverse, S-Curve			
	LED Refresh Rate	900, 1000, 1100, **1200**, 1300, 1400, 1500, 2500, 4000, 5000, 10K, 15K, 20K, & 25K			
	Reset Motors	Pan/Tilt Reset	YES/**NO**		
		Color Reset	YES/**NO**		
		Gobo Reset	YES/**NO**		
		Focus and Zoom reset	YES/**NO**		
		Other motor reset	YES/**NO**		
	Display	Screen Saver Delay	**01M**~10M /OFF		
		Touch Screen Lock	**OFF**/ON		
		Rotate Display 180°	YES/**NO**		
	Temp Unit	**C**/F			
	Service	Passcode	Effect Adjust (Calibration)	Pan 000-255	
				Tilt 000-255	
				Color 000-255	
				...	
				Shutter000-255	
			USB Software Update	YES / **NO**	
			Factory Restore	YES / **NO**	
Manual Control	Pan	000-255			
	Tilt	000-255			
	Red	000-255			
	Green	000-255			
	Blue	000-255			
	Mint	000-255			
	Amber	000-255			
	...	...			
	Color	000-255			
	Control	000-255			

SYSTEM MENU

ELATION FUZE MAX SPOT					
Supports Software Versions: ≥ 1.0.0					
MAIN MENU	**OPTIONS / VALUES** (Default Settings in **BOLD**)				**DESCRIPTION**
Internal Programs	Program 0	Speed	000-255		
		Fade	000-255		
	Program 1	Speed	000-255		
		Fade	000-255		
	Program 2	Speed	000-255		
		Fade	000-255		
	Program 3	Speed	000-255		
		Fade	000-255		
	...	...	...		
	Program 16	Speed	000-255		
		Fade	000-255		
Information	Fixture Life Time	Power On Time	xxxxxx Hours		
	Fixture Last Run Time	Power On Resetable Time	xxxxxx Hours		
		Power On Time Reset	Passcode	YES/**NO**	
	Fixture Temperatures	LEDs	Current		xxx ℉/xxx ℃
			Max Resettable		xxx ℉/xxx ℃
			Max Not Resettable		xxx ℉/xxx ℃
		Reset LED Temp	Passcode	YES/**NO**	
		Base Temp	Current		xxx ℉/xxx ℃
	Fan Info.	LED Fan RPM	1_fan xxxx		
			2_fan xxxx		
			3_fan xxxx		
			4_fan xxxx		
		Base Fan RPM	Base_fan xxxx		
	DMX Values	Pan			
		Tilt			
		...			
		Zoom			
	Product IDs	RDM UID			
	Error Logs	Fixture Errors	List Errors one by one		
		Reset Error Log	Passcode	YES/**NO**	
	Software Version	1U:V1.0.1C 2U:V1.0.1C 3U:V1.0.1C 4U:V1.0.1C 5U:V1.0.1C 6U:V1.0.1C 7U:V1.0.1C			

DIMMER MODE

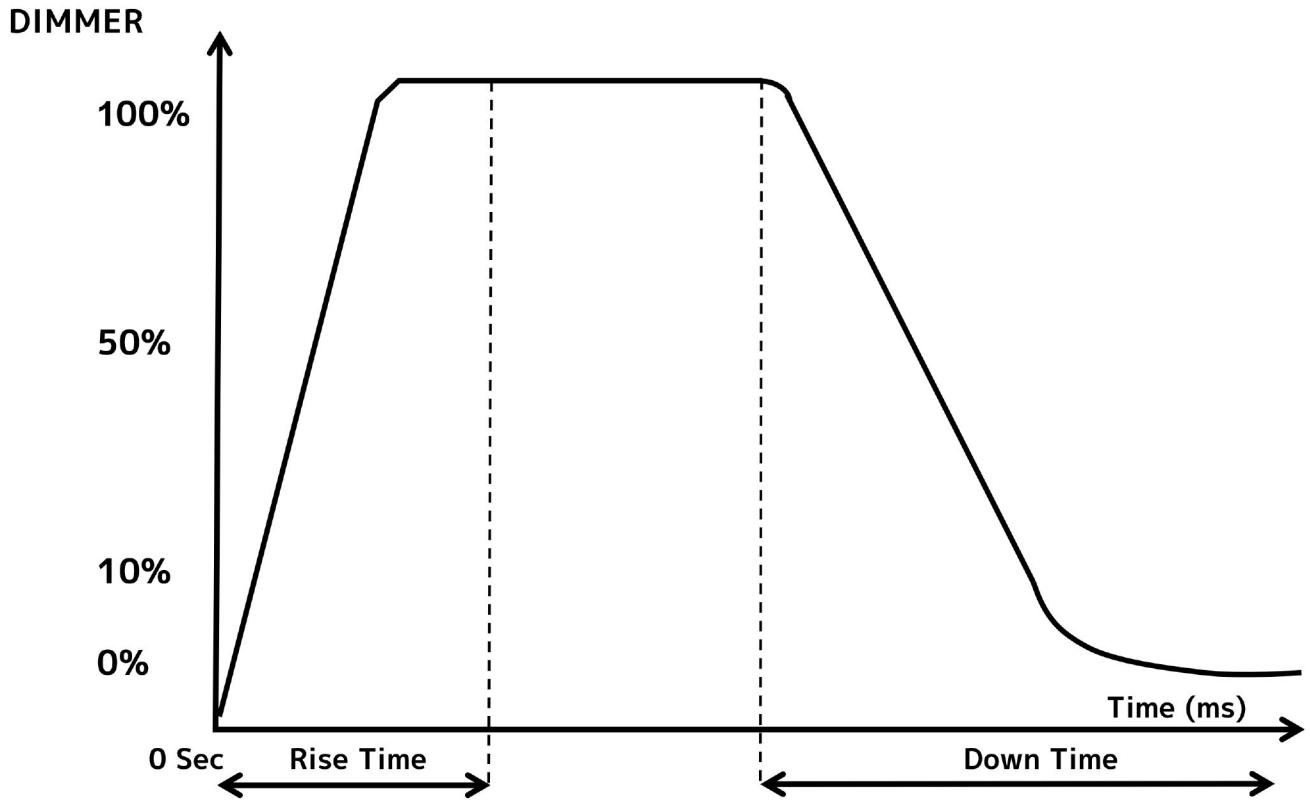

Dimming Curve Ramp Effect	0 sec Fade Time		1 sec Fade Time	
	Rise Time (ms)	Down Time (ms)	Rise Time (ms)	Down Time (ms)
Standard (default)	0	0	0	0
Stage	780	1100	1540	1660
TV	1180	1520	1860	1940
Architectural-	1380	1730	2040	2120
Theatre	1580	1940	2230	2280
Stage 2	0	1100	0	1660

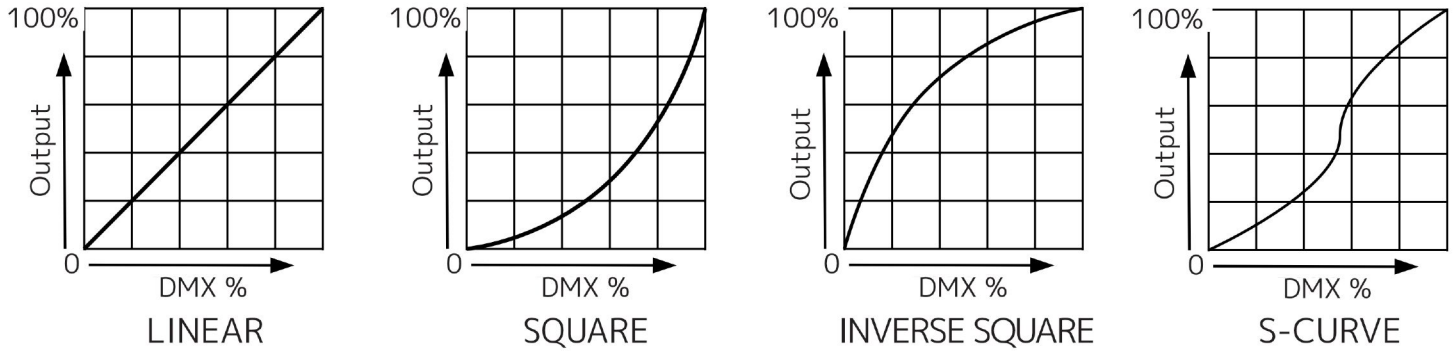

DMX TRAITS: CHANNEL FUNCTIONS & VALUES

ELATION FUZE MAX SPOT						
Supports Software Versions: ≥ 1.0.0						
Features subject to change without notice						
MODE/CHANNEL				**VALUE**	**FUNCTION**	**DEFAULT**
STANDARD	**EXTENDED**	**CMY**	**CMY EXTENDED**			
1	1	1	1		**PAN Movement 8bit:**	0
				0-255	Pan Movement	
2	2	2	2		**Pan Fine 16bit:**	0
				0-255	Fine control of Pan movement	
3	3	3	3		**TILT Movement 8bit:**	0
				0-255	Tilt Movement	
4	4	4	4		**Tilt Fine 16bit:**	0
				0-255	Fine control of Tilt movement	
		5	5		**Cyan:**	0
				0-255	Cyan (0-100% Cyan)	
			6		**Cyan Fine:**	0
				0-255	Cyan Fine	
		6	7		**Magenta:**	0
				0-255	Magenta (0-100% Magenta)	
			8		**Magenta Fine:**	0
				0-255	Magenta Fine	
		7	9		**Yellow:**	0
				0-255	Yellow (0-100% Yellow)	
			10		**Yellow Fine:**	0
				0-255	Yellow Fine	
5	5				**Red:**	0
				0-255	Red (0-100% Red)	
	6				**Red Fine:**	0
				0-255	Red Fine	
6	7				**Green:**	0
				0-255	Green (0-100% Green)	
	8				**Green Fine:**	0
				0-255	Green Fine	
7	9				**Blue:**	0
				0-255	Blue (0-100% Blue)	
	10				**Blue Fine:**	0
				0-255	Blue Fine	
8	11				**Mint:**	0
				0-255	Mint (0-100% Mint)	
	12				**Mint Fine:**	0
				0-255	Mint Fine	
9	13				**Amber:**	0
				0-255	Amber (0-100% Amber)	
	14				**Amber Fine:**	0
				0-255	Amber Fine	
10	15	8	11		**CTC:**	
				0-23	Open	
				24 -85	CTC 2400K - 8500K (see separate sheet)	
				86-255	8500K	

ELATION FUZE MAX SPOT						
Supports Software Versions: ≥ 1.0.0						
Features subject to change without notice						
MODE/CHANNEL				**VALUE**	**FUNCTION**	**DEFAULT**
STANDARD	**EXTENDED**	**CMY**	**CMY EXTENDED**			
11	16	9	12		**Color Wheel:**	
				0	Open	
				1-60	Virtual Swatch Book (see separate sheet)	
				61-179	Open	
					Color Scroll	
				180-201	CW,fast→slow	
				202-207	Stop	
				208-229	CCW,slow→ fast	
				230-234	Open	
					Random Slots	
				235-239	Fast	
				240-244	Medium	
				245-249	Slow	
				250-255	Open	
	17		13		**Green Shift:**	
				0	Idle	
				1-127	Full Minus Green to Neutral	
				128	Neutral White	
				129-255	Neutral to Full Plus Green	
12	18	10	14		**CTC Crossfade:**	
				0	CTC	
				255	Color Mix	
13	19	11	15		**Rotating gobos, cont. rotation**	
				0-9	Open	
				10-19	Rot. gobo 1	
				20-29	Rot. gobo 2	
				30-39	Rot. gobo 3	
				40-49	Rot. gobo 4	
				50-59	Rot. gobo 5	
				60-69	Rot. gobo 6	
				70-89	Gobo 1 shake slow to fast	
				90-109	Gobo 2 shake slow to fast	
				110-129	Gobo 3 shake slow to fast	
				130-149	Gobo 4 shake slow to fast	
				150-169	Gobo 5 shake slow to fast	
				170-189	Gobo 6 shake slow to fast	
				190-221	Scroll CW fast to slow	
				222-223	Stop	
				224-255	Scroll CCW slow to fast	
14	20	12	16		**Rotating gobo index, rotating gobo rotation**	
				0-127	GoboRot indexing	
				128-189	CW Gobo scroll from fast to slow	
				190-193	Stop	
				194-255	CCW Gobo scroll from slow to fast	
15	21	13	17		**Rotating gobo fine indexing:**	
				0-255	Fine indexing	

ELATION FUZE MAX SPOT						
Supports Software Versions: ≥ 1.0.0						
Features subject to change without notice						
MODE/CHANNEL				**VALUE**	**FUNCTION**	**DEFAULT**
STANDARD	**EXTENDED**	**CMY**	**CMY EXTENDED**			
16	22	14	18		**Rotating Gobo 2**	
				0-9	Open	
				10-19	Rot. gobo 1	
				20-29	Rot. gobo 2	
				30-39	Rot. gobo 3	
				40-49	Rot. gobo 4	
				50-59	Rot. gobo 5	
				60-69	Rot. gobo 6	
				70-89	Gobo 1 shake slow to fast	
				90-109	Gobo 2 shake slow to fast	
				110-129	Gobo 3 shake slow to fast	
				130-149	Gobo 4 shake slow to fast	
				150-169	Gobo 5 shake slow to fast	
				170-189	Gobo 6 shake slow to fast	
				190-221	Scroll CW fast to slow	
				222-223	Stop	
				224-255	Scroll CCW slow to fast	
17	23	15	19		**Rotating Gobo 2 Index, Rotation**	
				0-127	Gobo indexing	
				128-189	CW Gobo scroll from fast to slow	
				190-193	No rotation	
				194-255	CCW Gobo scroll from slow to fast	
18	24	16	20		**Rotating gobo 2 fine indexing:**	
				0-255	Fine indexing	
19	25	17	21		**Fixed Gobo Wheel**	
				0-9	Open	
				10-19	Gobo 1	
				20-29	Gobo 2	
				30-39	Gobo 3	
				40-49	Gobo 4	
				50-59	Gobo 5	
				60-69	Gobo 6	
				70-77	Gobo 7	
				78-93	Gobo 1 shake slow to fast	
				94-109	Gobo 2 shake slow to fast	
				110-125	Gobo 3 shake slow to fast	
				126-141	Gobo 4 shake slow to fast	
				142-157	Gobo 5 shake slow to fast	
				158-173	Gobo 6 shake slow to fast	
				174-189	Gobo 7 shake slow to fast	
				190-221	CW Gobo scroll from fast to slow	
				222-223	No rotation	
				224-255	CCW Gobo scroll from slow to fast	
20	26	18	22		**Prism:**	
				0-6	Open	
				7-130	4 Facet Linear	
				131-255	4 Facet	

ELATION FUZE MAX SPOT						
Supports Software Versions: ≥ 1.0.0						
Features subject to change without notice						
MODE/CHANNEL				**VALUE**	**FUNCTION**	**DEFAULT**
STANDARD	**EXTENDED**	**CMY**	**CMY EXTENDED**			
21	27	19	23		**Rotating prism1/2 index, rotating prism 1/2 rotation:**	
				0-127	Prism1/2 indexing	
				128-189	Forwards prism1/2 rotation from slow to fast	
				190-193	Stop	
				194-255	Backwards prism1/2 rotation from fast to slow	
	28		24		**Rotating prism indexing Fine:**	
				0-255	Fine indexing	
22	29	20	25		**Focus**	
				0-255	Continuous adjustment from far to near	
23	30	21	26		**Focus Fine**	
				0-255	Fine focusing	
24	31	22	27		**Zoom:**	
				0-255	Zoom adjustment from small to big	
25	32	23	28		**Zoom Fine**	
				0-255	Fine zooming	
26	33	24	29		**Shutter, strobe:**	
				0-31	Shutter closed	
				32-63	No function (shutter open)	
				64-95	Strobe effect slow to fast	
				96-127	No function (shutter open)	
				128-159	Pulse-effect in sequences	
				160-191	No function (shutter open)	
				192-223	Random strobe effect slow to fast	
				224-255	No function (shutter open)	
27	34	25	30		**Dimmer:**	
				0-255	Intensity 0 to 100%	
28	35	26	31		**Dimmer Fine:**	
				0-255	Dimmer fine	

ELATION FUZE MAX SPOT						
Supports Software Versions: ≥ 1.0.0						
Features subject to change without notice						
MODE/CHANNEL				**VALUE**	**FUNCTION**	**DEFAULT**
STANDARD	**EXTENDED**	**CMY**	**CMY EXTENDED**			
					Dim Modes	
				0-20	Standard	
				21-40	Stage	
				41-60	TV	
				61-80	Architectural	
				81-100	Theatre	
				101-120	Stage 2	
					Dimmer Delay Time	
				121	0s	
				122	0.1s	
				123	0.2s	
				124	0.3s	
				125	0.4s	
				126	0.5s	
				127	0.6s	
	36		32	128	0.7s	
				129	0.8s	
				130	0.9s	
				131	1.0s	
				132	1.5s	
				133	2.0s	
				134	3.0s	
				135	4.0s	
				136	5.0s	
				137	6.0s	
				138	7.0s	
				139	8.0s	
				140	9.0s	
				141	10s	
				142-255	Idle	
					Iris:	
29	37	27	33	0-191	Max. diameter to Min. diameter	
				192-223	Pulse opening fast to slow	
				224-255	Pulse closing slow to fast	
					Iris-fine	
	38		34	0-255	Fine iris movement	
					Frost1:	
30	39	28	35	0-255	Frost:0 – 100%(Linear)	
					Frost2:	
31	40	29	36	0-255	Frost:0 – 100%(Linear)	
					Animation wheel:	
32	41	30	37	0-7	Open	
				8-255	Animation min to max	
					Animation index,animation rotation:	
				0-127	Animation indexing	
33	42	31	38	128-189	CW animation rotation fast to slow	
				190-193	No rotation	
				194-255	CCW animation rotation slow to fast	
					Pan / Tilt and Color Speed:	
				0-225	Max to min speed	
	43		39	226-235	Blackout by movement	
				236-245	Blackout by all wheel changing	
				246-255	No function	

ELATION FUZE MAX SPOT						
Supports Software Versions: ≥ 1.0.0						
Features subject to change without notice						
MODE/CHANNEL				**VALUE**	**FUNCTION**	**DEFAULT**
STANDARD	**EXTENDED**	**CMY**	**CMY EXTENDED**			
					Control:	
				0-19	Color change normal	
				20-29	Color change to any position	
				30-39	Color & gobo change to any position	
				40-44	Fan Mode Studio	
				45-49	Fan Mode Mute	
				50-59	Fan Mode Low	
				60-69	Fan Mode High	
				70-79	Fan Mode Auto	
				80-84	All motor reset	
				85-87	Pan/Tilt reset	
				88-90	Gobo reset	
				91-93	Focus and Zoom reset	
				94-96	Other motor reset	
				97-99	Idle	
				100-168	**Refresh Rate (Hz)**	
				100	900	
				101	910	
				102	920	
				103	930	
				104	940	
				105	950	
				106	960	
				107	970	
				108	980	
				109	990	
34	44	32	40	110	1000	
				111	1010	
				112	1020	
				113	1030	
				114	1040	
				115	1050	
				116	1060	
				117	1070	
				118	1080	
				119	1090	
				120	1100	
				121	1110	
				122	1120	
				123	1130	
				124	1140	
				125	1150	
				126	1160	
				127	1170	
				128	1180	
				129	1190	
				130	1200	
				131	1210	
				132	1220	
				133	1230	
				134	1240	
				135	1250	
				136	1260	

ELATION FUZE MAX SPOT						
Supports Software Versions: ≥ 1.0.0						
Features subject to change without notice						
MODE/CHANNEL				**VALUE**	**FUNCTION**	**DEFAULT**
STANDARD	**EXTENDED**	**CMY**	**CMY EXTENDED**			
34	44	32	40	137	1270	
				138	1280	
				139	1290	
				140	1300	
				141	1310	
				142	1320	
				143	1330	
				144	1340	
				145	1350	
				146	1360	
				147	1370	
				148	1380	
				149	1390	
				150	1400	
				151	1410	
				152	1420	
				153	1430	
				154	1440	
				155	1450	
				156	1460	
				157	1470	
				158	1480	
				159	1490	
				160	1500	
				161	2500	
				162	4000	
				163	5000	
				164	6000	
				165	10000	
				166	15000	
				167	20000	
				168	25000	
				169-190	Idle	
				191-195	Hibernation OFF	
				196-200	Hibernation ON	
				201-210	Dimmer Curve Linear (default)	
				211-220	Dimmer Curve Square	
				221-230	Dimmer Curve Inverse Square	
				231-240	Dimmer Curve S-Curve	
				241	Internal program 1 (Scene 1-8)	
				242	Internal program 2 (Scene 9-16)	
				243	Internal program 3 (Scene 17-24)	
				244	Internal program 4 (Scene 25-32)	
				245	Internal program 5 (Scene 33-40)	
				246	Internal program 6 (Scene 41-48)	
				247	Internal program 7 (Scene 49-56)	
				248-255	Idle	

RDM PARAMETERS

Error Codes subject to change without notice	
RDM CODES	**DESCRIPTION**
0x0011	Proxied Device Count
0x0200	Sensor Definition
0x0201	Sensor Value
0x0080	Device Model Description
0x0081	Manufacturer Label
0x0082	Device Label
0x00E0	DMX Personality
0x00E1	DMX Personality Description
0x0400	Device Hours
0x0015	Comms Status
0x0031	Status ID Description
0x0032	Clear Status ID
0x0401	Lamp Hours
0x0402	Lamp Strikes
0x0403	Lamp State
0x0404	Lamp Mode
0x0405	Device Power Cycles
0x0600	Pan Invert
0x0601	Tilt Invert
0x0602	Pan Tilt Swap
0x0500	Display Invert
0x0501	Display Level
0x0603	Realtime Clock
0x1010	Power State
0x1031	Preset Playback
0x0122	Default Slot Value
0x00B0	Language
0x00A0	Language Capabilities
0x00C2	Boot Software Version Label
0x00C1	Boot Software Version ID
0x0070	Product Detail ID List
0x0030	Status Messages
0x1001	Reset Device
0x0000	Undefined PID

ERROR CODES

Error Codes subject to change without notice	
ERROR CODES	**DESCRIPTION**
PAN	PAN Error
TILT	TILT Error
Gobo1	Gobo 1 Error
Gobo1 Rot	Gobo 1 Rot Error
Gobo2	Gobo2 Error
Gobo2 Rot	Gobo 2 Rotation Error
Fixed Gobo	Fixed Gobo Error
Zoom	Zoom Error
Focus	Focus Error
Prism1	Prism 1 Error
Prism1 Rot	Prism 1 Rotation Error
Prism2	Prism 2 Error
Prism2 Rot	Prism 2 Rotation Error
Animation	Animation Error
Animation Rot	Animation Rotation Error
Iris	Iris Error
LED Temp	LED Temperature Error
Base Temp	Base Temperature Error
Cool Fan1	Cool Fan 1 Error
Cool Fan2	Cool Fan 2 Error
Cool Fan3	Cool Fan 3Error
Cool Fan4	Cool Fan 4 Error
Cool Fan5	Cool Fan 5 Error
Cool Fan6	Cool Fan 6 Error
Gobo Fan	Gobo Fan Error
Base Fan	Base Fan Error

SPECIFICATIONS

SOURCE
800W 6,500K RGBMA LED Engine
30,000 Hour Average LED Life*
*Test lab conditions. May vary depending on several factors including but not limited to: Environmental Conditions, Power/Voltage, Usage Patterns (On-Off Cycling),Control, and Dimming.

PHOTOMETRIC DATA
21.000 Total Lumen Output
CRI 92
Zoom Range 7° - 53°
Beam Angle 6.6° - 50.3°
Field Angle 7.8° - 55°

EFFECTS
Motorized Zoom
Dual Variable Frost Filter (Medium/ Wash)
4 Facet Round, 4 Facet Linear Prism
Motorized Iris
Variable 16-bit Dimming Curve Modes
High Speed Electronic Shutter and Strobe

COLOR
RGBMA Color Array
CMY Emulation
Virtual Color Correction
Green/Magenta Shift
Virtual Gel Swatch Book

GOBOS
2x 6 Rotating / Indexing Interchangeable Glass Gobos
1x 7 Fixed Interchangeable Glass Gobos
Animation Wheel

CONTROL/CONNECTIONS
4 DMX Channel Modes (RGBMA 34/44) (CMY 32/40)
16-bit Pan, Tilt, and Dimming Control
DMX Adjustable LED Frequency
DMX, RDM, Art-NET, sACN Protocol Support
4 Button Touch Control Panel
Full Color 180° Reversible LCD Menu Display
16 Bit Resolution Adjustable Movement
5pin DMX In/Out
Locking Ethernet In/Out
IP65 Locking Power Cable In
With Wired Digital Communication Network

SIZE / WEIGHT
Length: 18.19” (462mm)
Width: 21.26" (540mm)
Width with Snoot: 30.4" (771mm)
Vertical Height: 28.3" (719mm)
Vertical Heigh with Snoot: 30.4" (771mm)
Weight: 71.2 lbs. (32.3kg)

ELECTRICAL
AC 100-240V - 50/60Hz
1214W Max Power Consumption
14°F to 113°F (-10°C to 45°C)

APPROVALS / RATINGS
CE | cETLus | IP20

Intertek
4010832

Specifications and documentation subject to change without notice.

DIMENSIONS

*Drawings not to scale. Specifications and improvements in the design of this unit and this manual are subject to change without notice.

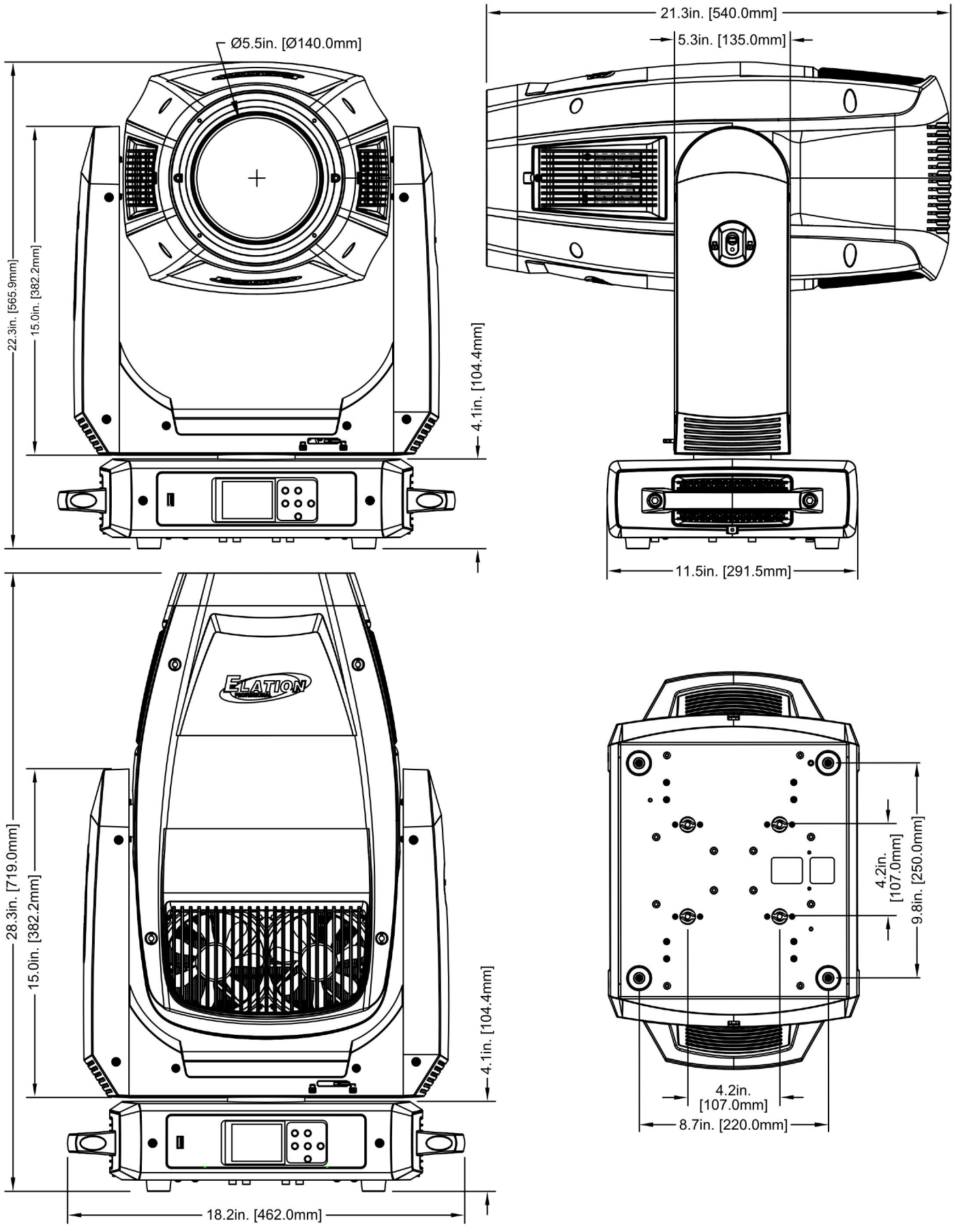

DIMENSIONS - FUZE MAX SPOT WITH SNOOT

*Drawings not to scale. Specifications and improvements in the design of this unit and this manual are subject to change without notice.

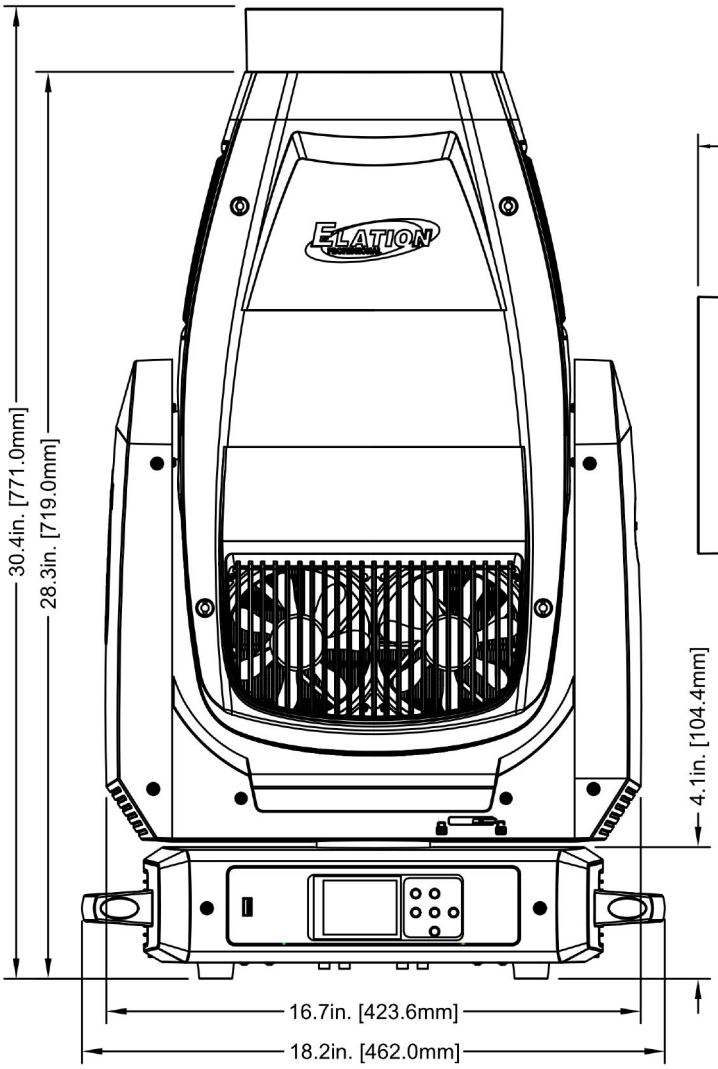

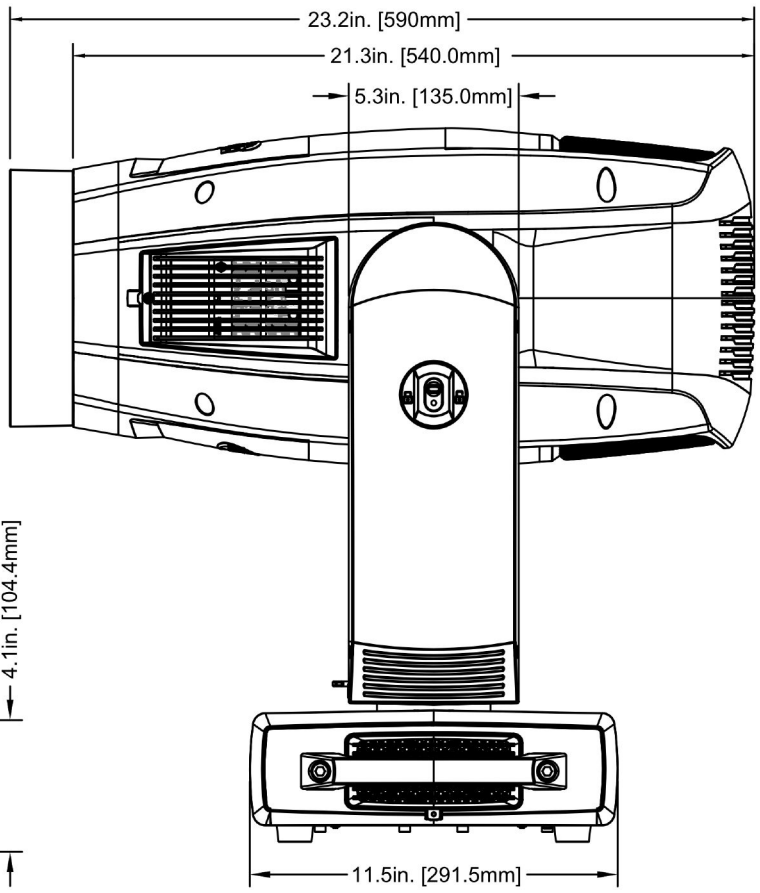

OPTIONAL ACCESSORIES

ORDER CODE	ITEM
TRIGGER CLAMP	Heavy Duty Wrap Around Hook Style Clamp
SIP126	5 ft. (1.5m) IP65 Twist Lock Power Link Cable
AC5PDMX5PRO	5 ft. (1.5m) 5pin PRO DMX Cable
	Additional Cable Lengths Available

FCC STATEMENT

This device complies with Part 15 of the FCC Rules. Operation is subject to the following two conditions: (1) this device may not cause harmful interference, and (2) this device must accept any interference received, including interference that may cause undesired operation.

FCC RADIO FREQUENCY INTERFERENCE WARNINGS & INSTRUCTIONS

This product has been tested and found to comply with the limits as per Part 15 of the FCC Rules. These limits are designed to provide reasonable protection against harmful interference in a residential installation. This device uses and can radiate radio frequency energy and, if not installed and used in accordance with the included instructions, may cause harmful interference to radio communications. However, there is no guarantee that interference will not occur in a particular installation. If this device does cause harmful interference to radio or television reception, which can be deter- mined by turning the device off and on, the user is encouraged to try to correct the interference by one or more of the following methods:

- Reorient or relocate the device.
- Increase the separation between the device and the receiver.
- Connect the device to an electrical outlet on a circuit different from which the radio receiver is connected.
- Consult the dealer or an experienced radio/TV technician for help.

Energy Saving Matters (EuP 2009/125/EC)

Saving electric energy is a key to help protecting the environment. Please turn off all electrical products when they are not in use. To avoid power consumption in idle mode, disconnect all electrical equipment from power when not in use. Thank you!