MAGMATIC

PRISMA MINI PAR 20



User Manual

©2020 MAGMATIC EFFECTS all rights reserved. Information, specifications, diagrams, images, and instructions herein are subject to change without notice. MAGMATIC EFFECTS logo and identifying product names and numbers herein are trademarks of MAGMATIC EFFECTS. Copyright protection claimed includes all forms and matters of copyrightable materials and information now allowed by statutory or judicial law or hereinafter granted. Product names used in this document may be trademarks or registered trademarks of their respective companies and are hereby acknowledged. All non-MAGMATIC brands and product names are trademarks or registered trademarks of their respective companies.

MAGMATIC EFFECTS and all affiliated companies hereby disclaim any and all liabilities for property, equipment, building, and electrical damages, injuries to any persons, and direct or indirect economic loss associated with the use or reliance of any information contained within this document, and/or as a result of the improper, unsafe, insufficient and negligent assembly, installation, rigging, and operation of this product.

MAGMATIC EFFECTS | 6122 S. Eastern Ave. **|** Los Angeles, CA. 90040
323-582-3322 **|** 323-832-9142 fax **|** www.elationlighting.com **|** sales@magmaticeffects.com

Elation Professional B.V. | Junostraat 2 **|** 6468 EW Kerkrade, The Netherlands
+31 45 546 85 66 **|** +31 45 546 85 96 fax **|** www.elationlighting.eu **|** info@elationlighting.eu

Elation Professional Mexico | AV Santa Ana 30 | Parque Industrial Lerma, Lerma, Mexico 52000
+52 (728) 282-7070



RISK GROUP 3 - RISK OF EXPOSURE TO ULTRAVIOLET (UV) RADIATION!
FIXTURE EMITS HIGH INTENSITY WAVELENGTH OF ULTRAVIOLET LIGHT
WEAR PROPER EYE AND SKIN PROTECTION.
DO NOT OPERATE FIXTURE WITH DAMAGED/MISSING EXTERNAL COVER OR PROTECTIVE LENS.
DO NOT LOOK DIRECTLY INTO THE (UV) LIGHT AND/OR VIEW (UV) LIGHT DIRECTLY WITH OPTICAL INSTRUMENTS THAT MAY CONCENTRATE THE LIGHT/RADIATION OUTPUT.
AVOID PROLONGED PERIODS OF EXPOSURE.
AVOID WEARING WHITE COLOR CLOTHING AND/OR USING (UV) PAINTS ON SKIN.
AVOID DIRECT EYE AND/OR SKIN EXPOSURE AT DISTANCES SHORTER THAN 11 feet (3.3m).
INDIVIDUALS SUFFERING FROM A RANGE OF EYE CONDITIONS, SUNLIGHT EXPOSURE DISORDERS, OR INDIVIDUALS USING PHOTOSENSITIVE MEDICATION, MAY EXPERIENCE DISCOMFORT IF EXPOSED TO THE ULTRAVIOLET (UV) LIGHT EMITTED FROM THIS FIXTURE.

D O C U M E N T V E R S I O N

Due to additional product features and/or enhancements, an updated version of this document may be available online. Please scan the QR Code with your mobile device or visit www.elationlighting.com **for the latest revision/update of this manual, before installation and/or programming.**

Date	Document Version	Software Version ≥	DMX Channel Modes	Notes
07/08/2020	1.0	N/A	N/A	Initial release.
12/11/2020	2.0	N/A	N/A	Updated Dimensional Drawings, Specifications.

C O N T E N T S

General Information	4
Limited Warranty (USA Only)	5
Warranty Returns (USA Only)	6
Safety Guidelines	7
Maintenance Guidelines	9
Fixture Overview	10
Installation Instructions	11
Specifications	14
Dimensional Drawings	15

GENERAL INFORMATION

INTRODUCTION

Please read and understand the instructions in this manual carefully and thoroughly before attempting to operate this device. These instructions contain important safety and use information.

UNPACKING

Every device has been thoroughly tested and has been shipped in perfect operating condition. Carefully check the shipping carton for damage that may have occurred during shipping. If the carton is damaged, carefully inspect the device for damage, and be sure all accessories necessary to install and operate the device have arrived intact. In the event damage has been found or parts are missing, please contact our customer support team for further instructions. Please do not return this device to your dealer without first contacting customer support. Please do not discard the shipping carton in the trash. Please recycle whenever possible.

BOX CONTENTS

Phoenix Connector (x1)
Positive Wire Tip Sheath (x2)
Negative Wire Tip Sheath (x2)

CUSTOMER SUPPORT

Contact MAGMATIC Service for any product related service and support needs.
Also visit forums.elationlighting.com with questions, comments or suggestions.

ELATION SERVICE USA - Monday - Friday 8:00am to 4:30pm PST
323-582-3322 | Fax 323-832-9142 | support@elationlighting.com

ELATION SERVICE EUROPE - Monday - Friday 08:30 to 17:00 CET
+31 45 546 85 63 | Fax +31 45 546 85 96 | support@elationlighting.eu

REPLACEMENT PARTS please visit parts.elationlighting.com

IMPORTANT NOTICE!

THERE ARE NO USER SERVICEABLE PARTS INSIDE THIS UNIT.
DO NOT ATTEMPT ANY REPAIRS YOURSELF; DOING SO WILL VOID YOUR MANUFACTURER'S WARRANTY. DAMAGES RESULTING FROM MODIFICATIONS TO THIS FIXTURE AND/OR THE DISREGARD OF SAFETY INSTRUCTIONS AND GUIDELINES IN THIS MANUAL VOID THE MANUFACTURER'S WARRANTY AND ARE NOT SUBJECT TO ANY WARRANTY CLAIMS AND/OR REPAIRS.

LIMITED WARRANTY (USA ONLY)

A. Magmatic Effects hereby warrants, to the original purchaser, Magmatic products to be free of manufacturing defects in material and workmanship for a period of two years (730 days) from the original date of purchase. This warranty excludes discharge lamps and all product accessories. This warranty shall be valid only if the product is purchased within the United States of America, including possessions and territories. It is the owner's responsibility to establish the date and place of purchase by acceptable evidence, at the time service is sought.

B. For warranty service, send the product only to the Magmatic Effects factory. All shipping charges must be pre-paid. If the requested repairs or service (including parts replacement) are within the terms of this warranty, Magmatic Effects will pay return shipping charges only to a designated point within the United States. If any product is sent, it must be shipped in its original package and packaging material. No accessories should be shipped with the product. If any accessories are shipped with the product, Magmatic Effects shall have no liability whatsoever for loss and/or or damage to any such accessories, nor for the safe return thereof.

C. This warranty is void if the product serial number and/or labels are altered or removed; if the product is modified in any manner which Magmatic Effects concludes, after inspection, affects the reliability of the product; if the product has been repaired or serviced by anyone other than the Magmatic Effects factory unless prior written authorization was issued to purchaser by Magmatic Effects; if the product is damaged because not properly maintained as set forth in the product instructions, guidelines and/or user manual.

D. This is not a service contract, and this warranty does not include any maintenance, cleaning, or periodic check-up. During the periods as specified above, Magmatic Effects will replace defective parts at its expense, and will absorb all expenses for warranty service and repair labor by reason of defects in material or workmanship. The sole responsibility of Magmatic Effects under this warranty shall be limited to the repair of the product, or replacement thereof, including parts, at the sole discretion of Magmatic Effects. All products covered by this warranty were manufactured after January 1, 1990, and bear identifying marks to that effect.

E. Magmatic Effects reserves the right to make changes in design and/or performance improvements upon its products without any obligation to include these changes in any products theretofore manufactured.

F. No warranty, whether expressed or implied, is given or made with respect to any accessory supplied with the products described above. Except to the extent prohibited by applicable law, all implied warranties made by Magmatic Effects in connection with this product, including warranties of merchantability or fitness, are limited in duration to the warranty periods set forth above. And no warranties, whether expressed or implied, including warranties of merchantability or fitness, shall apply to this product after said periods have expired. The consumer's and/or dealer's sole remedy shall be such repair or replacement as is expressly provided above; and under no circumstances shall Magmatic Effects be liable for any loss and/or damage, direct and/or consequential, arising out of the use of, and/or the inability to use, this product.

G. This warranty is the only written warranty applicable to Magmatic Effects products and supersedes all prior warranties and written descriptions of warranty terms and conditions heretofore published.

WARRANTY RETURNS (USA ONLY)

To obtain warranty service, a Return Material Authorization (RMA) number must first be obtained from MAGMATIC. It is the Customer's responsibility to provide product proof of purchase and serial number by acceptable evidence such as an invoice copy or an approved MAGMATIC Extended Warranty Certificate ("EWC") and any relevant maintenance records at the time warranty service is sought. Failure to provide acceptable evidence of product proof of purchase or EWC and any relevant maintenance records may be cause for denial of warranty service.

Products returned for warranty service must be sent without any accessories (i.e., power, data, and safety cables, brackets, clamps, rigging hardware, frost filters, gel frames, barn doors, lenses, hoses, nozzles, rack mounting hardware, etc.), must be boxed using the original and/or suitable packaging materials (double-box and foam) that provides ample product protection for ground and/or air freight transit, and must be shipped freight pre-paid and insured to MAGMATIC in Los Angeles, CA or a MAGMATIC Authorized Service Center. The RMA number must be clearly written on the outside of the return box, and a brief description of the problem and the RMA number must be documented and included in the box.

Products returned for warranty service without an RMA number clearly marked on the outside of the package will be refused and returned to the shipper at the Customer's expense. Products returned for warranty service, which are received damaged due to inadequate and/or improper packaging and/or due to damage caused by the shipping carrier, may incur additional repair charges before warranty service begins and/or may void this warranty. If any product accessories (included and/or optional) are shipped with the product, MAGMATIC and/or the MAGMATIC Authorized Service Center shall have no liability what so ever for the loss and/or damage to any such accessories, nor the safe return thereof. If the requested warranty repairs or service (including parts replacement) are within the terms of this warranty, MAGMATIC will pay return ground transportation shipping charges to a single designated point within the United States.

SAFETY GUIDELINES

This fixture is a sophisticated piece of electronic equipment. To guarantee smooth operation, it is important to follow all instructions and guidelines in this manual. Magmatic Effects is not responsible for injury and/or damages resulting from the misuse of this fixture due to the disregard of the information printed in this manual. Only qualified and/or certified personnel should perform installation of this fixture and only the original rigging parts included with this fixture should be used for installation. Any modifications to the fixture and/or the included mounting hardware will void the original manufacturer's warranty and increase the risk of damage and/or personal injury.



PROTECTION CLASS 1 - FIXTURE MUST BE PROPERLY GROUNDED



**THERE ARE NO USER SERVICEABLE PARTS INSIDE THIS UNIT.
DO NOT ATTEMPT ANY REPAIRS YOURSELF; DOING SO WILL VOID YOUR MANUFACTURER'S WARRANTY. DAMAGES RESULTING FROM MODIFICATIONS TO THIS FIXTURE AND/OR THE DISREGARD OF SAFETY INSTRUCTIONS AND GUIDELINES IN THIS MANUAL VOID THE MANUFACTURER'S WARRANTY AND ARE NOT SUBJECT TO ANY WARRANTY CLAIMS AND/OR REPAIRS.**



**DO NOT PLUG FIXTURE INTO A DIMMER PACK!
NEVER OPEN THIS FIXTURE WHILE IN USE!
UNPLUG POWER BEFORE SERVICING FIXTURE!
NEVER TOUCH FIXTURE DURING OPERATION, AS IT MAY BE HOT!
KEEP FLAMMABLE MATERIALS AWAY FROM FIXTURE!**



**NEVER LOOK DIRECTLY INTO THE LIGHT SOURCE!
RETINA INJURY RISK - MAY INDUCE BLINDNESS!
SENSITIVE PERSONS MAY SUFFER AN EPILEPTIC SHOCK!**

IP65

FIXTURE IS DUST TIGHT AND PROTECTED AGAINST LOW-PRESSURE WATER JETS FROM ANY DIRECTION

SAFETY GUIDELINES

- **DO NOT TOUCH** the fixture housing during operation. Turn OFF the power and allow approximately 15 minutes for the fixture to cool down before servicing.
- **DO NOT** shake fixture, and avoid brute force when installing and/or operating fixture.
- **DO NOT** operate fixture if the power cord is frayed, crimped, damaged and/or if any of the power cord connectors are damaged and do not insert into the fixture securely and with ease. **NEVER** force a power cord connector into the fixture. If the power cord or any of its connectors are damaged, replace it immediately with a new one of similar power rating.
- **DO NOT** block any air ventilation slots.
- All fan and air inlets must remain clean and free of dust and debris.
- Allow approx. 6" (15cm) between fixture and other devices or a wall for proper cooling.
- When installing fixture in a suspended environment, always use mounting hardware that is no less than M10 x 25 mm, and always install fixture with an appropriately rated safety cable.
- Always disconnect fixture from main power source before performing any type of service and/or cleaning procedure. Only handle the power cord by the plug end, and **NEVER** pull out the plug by tugging the wire portion of the cord.
- During the initial operation of this fixture, a light smoke or smell may emit from the interior of the fixture. This is a normal process and is caused by excess paint in the interior of the casing burning off from the heat associated with the lamp and will decrease gradually over time.
- Consistent operational breaks will ensure fixture will function properly for many years.
- **ONLY** use the original packaging and materials to transport the fixture for service.



RISK GROUP 3 - RISK OF EXPOSURE TO ULTRAVIOLET (UV) RADIATION!
FIXTURE EMITS HIGH INTENSITY WAVELENGTH OF ULTRAVIOLET LIGHT
WEAR PROPER EYE AND SKIN PROTECTION.
DO NOT OPERATE FIXTURE WITH DAMAGED/MISSING EXTERNAL COVER OR PROTECTIVE LENS.
DO NOT LOOK DIRECTLY INTO THE (UV) LIGHT AND/OR VIEW (UV) LIGHT DIRECTLY WITH OPTICAL INSTRUMENTS THAT MAY CONCENTRATE THE LIGHT/RADIATION OUTPUT.
AVOID PROLONGED PERIODS OF EXPOSURE.
AVOID WEARING WHITE COLOR CLOTHING AND/OR USING (UV) PAINTS ON SKIN.
AVOID DIRECT EYE AND/OR SKIN EXPOSURE AT DISTANCES SHORTER THAN 11 feet (3.3m).
INDIVIDUALS SUFFERING FROM A RANGE OF EYE CONDITIONS, SUNLIGHT EXPOSURE DISORDERS, OR INDIVIDUALS USING PHOTOSENSITIVE MEDICATION, MAY EXPERIENCE DISCOMFORT IF EXPOSED TO THE ULTRAVIOLET (UV) LIGHT EMITTED FROM THIS FIXTURE.

MAINTENANCE GUIDELINES

DISCONNECT POWER BEFORE PERFORMING ANY MAINTENANCE!

CLEANING

Frequent cleaning is recommended to ensure proper function, optimized light output, and an extended life. The frequency of cleaning depends on the environment in which the fixture operates: damp, smoky, or particularly dirty environments can cause greater accumulation of dirt on the fixture's optics. Clean the external lens surface periodically with a soft cloth to avoid dirt/debris accumulation.

NEVER use alcohol, solvents, or ammonia-based cleaners.

MAINTENANCE

Regular inspections are recommended to ensure proper function and extended life.
There are no user serviceable parts inside this fixture, please refer all other service issues to an authorized MAGMATIC service technician. Should you need any spare parts, please order genuine parts from your local MAGMATIC dealer.

Please refer to the following points during routine inspections:

- A detailed electrical check by an approved electrical engineer every three months, to make sure the circuit contacts are in good condition to prevent overheating.
- Be sure all screws and fasteners are securely always tightened. Loose screws may fall out during normal operation, resulting in damage or injury as larger parts could fall.
- Check for any deformations on the housing, color lenses, rigging hardware, and rigging points (ceiling, suspension, trussing). Deformations in the housing could allow for dust or liquids to enter into the fixture. Damaged rigging points or unsecured rigging could cause the fixture to fall and seriously injure a person(s).
- Electric power supply cables must not show any damage, material fatigue, or sediments.

NEVER remove the ground prong from the power cable.

FIXTURE OVERVIEW



1. Lens
2. Mounting Yoke Adjustment Nut
3. Mounting Yoke
4. Power/Signal Cable Gland
5. Power/Signal Cable
6. Safety Cable Attachment Point

INSTALLATION INSTRUCTIONS



FLAMMABLE MATERIAL WARNING

Keep fixture minimum 5.0 feet (1.5m) away from flammable materials and/or pyrotechnics.



ELECTRICAL CONNECTIONS

A qualified electrician should be used for all electrical connections and/or installations.



DO NOT INSTALL THE FIXTURE IF YOU ARE NOT QUALIFIED TO DO SO!

Fixture **MUST** be installed following all local, national, and country commercial electrical and construction codes and regulations.

Before rigging/mounting a single fixture or multiple interconnected fixtures for custom matrix designs to any metal truss/structure or placing the fixture(s) on any surface, a professional equipment installer **MUST** be consulted to determine if the metal truss/structure or surface is properly certified to safely hold the combined weight of the fixture(s), clamps, cables, and accessories.

Ambient operating temperature range is from **14°F (-10°C) to 113°F (45°C).**
Do not operate this fixture when ambient temperature falls outside this range.

Fixture(s) should be installed in areas outside walking paths, seating areas, or away from areas where unauthorized personnel might reach the fixture by hand.

NEVER stand directly below the fixture(s) when rigging, removing, or servicing.
Overhead fixture installation must always be secured with a secondary safety attachment, such as an appropriately rated safety cable (not included) that meets all local, national, and country codes and regulations. Allow approximately 15 minutes for the fixture to cool down before servicing.

INSTALLATION INSTRUCTIONS

CLAMP INSTALLATION

This fixture features an attachment point for a mounting clamp that is built into the mounting yoke, as well as a safety cable attachment point located on the back face. (see the illustration below). When mounting this fixture to truss, be sure to secure an appropriately rated clamp (not included) to the built-in mounting point and attach a separate **SAFETY CABLE** of the appropriate rating to the safety cable attachment point.

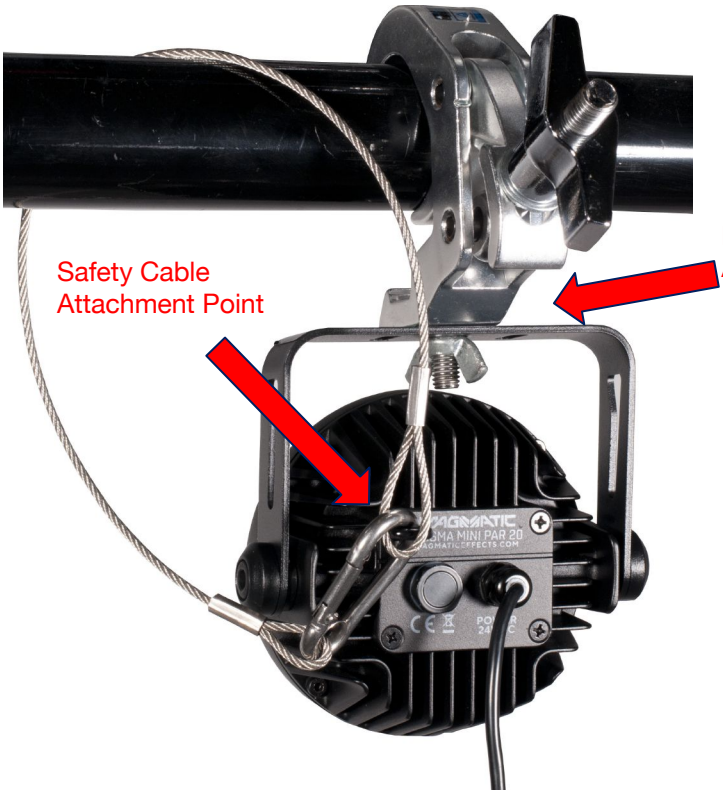

SAFETY CABLE

ALWAYS ATTACH A SAFETY CABLE WHENEVER INSTALLING THIS FIXTURE IN A SUSPENDED ENVIRONMENT TO ENSURE THE FIXTURE WILL NOT FALL IF THE CLAMP FAILS.

RIGGING

Overhead rigging requires extensive experience, including but not limited to: calculating working load limits, understanding the installation material being used, and periodic safety inspection of all installation material and the fixture. If you lack these qualifications, do not attempt the installation yourself. Improper installation can result in bodily injury.

INSTALLATION INSTRUCTIONS

PHOENIX CONNECTORS

This fixture is designed for use with the **MAGMATIC Prisma Driver 8.** A Phoenix connector is included with this fixture, and may be used to connect this fixture to the driver. A spare pair of wire end sheaths is also included with the fixture.



Begin by inserting the male end of the Phoenix connector into the desired signal output port on the driver, making sure that the latch on the Phoenix connector engages with the signal output port. Tighten the two screws located to each side of the wire terminals, as highlighted in the image to the above right.



Now insert the wire leads from the fixture into the wire terminals of the Phoenix connector, making sure that the bare wire lead ends have been fitted with wire end sheaths. Tighten the two screws above the wire terminals, as shown in the image at above right, to secure the wire leads in the Phoenix connector.

S P E C I F I C A T I O N S

SOURCE
(7) 3W High Power UV Diode LEDs
20,000 Hour Average LED Life*

*Test lab conditions. May vary depending on several factors including but not limited to:
Environmental Conditions, Power/Voltage, Usage Patterns (On-Off Cycling), Control, and Dimming.

PHOTOMETRIC DATA
20 Degree Narrow Beam Angle
365nm True UV Peak Wavelength

EFFECTS
High Speed Electronic Strobe
Variable Dimming Curve Modes

CONSTRUCTION
Rugged IP65 Rated Aluminum Housing
Adjustable Mounting Yoke

CONTROL
Multiple DMX Channel Modes
DMX-512 and RDM Protocol Support

CONNECTIONS
9 ft (1.8m) 2-Conductor 14 Gauge IP Rated Power/Data Pigtail Cable Attached
With Wired Digital Communication Network

SIZE / WEIGHT
Length: 5.669 in. (144mm)
Width: 2.866 in. (72.8mm)
Vertical Height: 5.669 in. (144mm)
Weight: 1.98 lbs. (0.9kg)

ELECTRICAL
AC100-240V 50-60Hz
19W Max Power Consumption

THERMAL
14°F to 113°F (-10°C to 45°C)
Air Cooled

APPROVALS / RATINGS
CE | cETLus | IP65

Specifications and improvements in the design of this unit and this manual are subject to change without any prior written notice.

DIMENSIONAL DRAWINGS

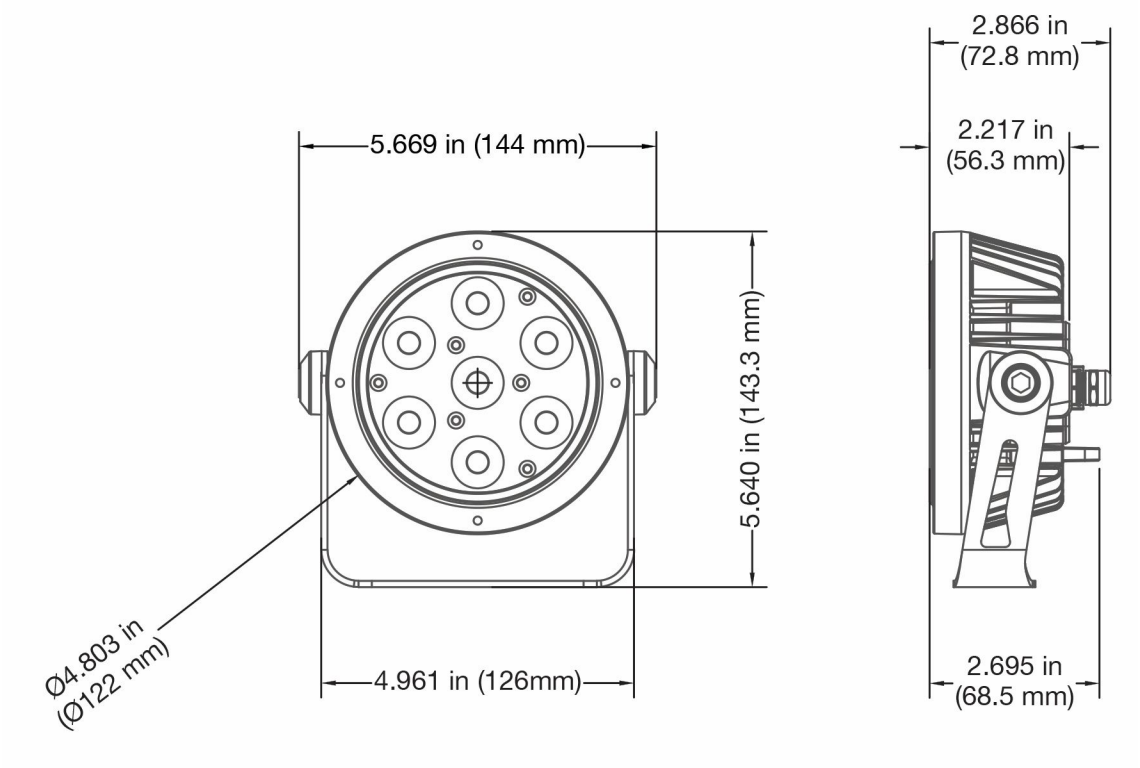

Drawings are not to scale.

SKU#: PSP120
EU#: 1237000234
UPC#: 810008261163