HELDER®

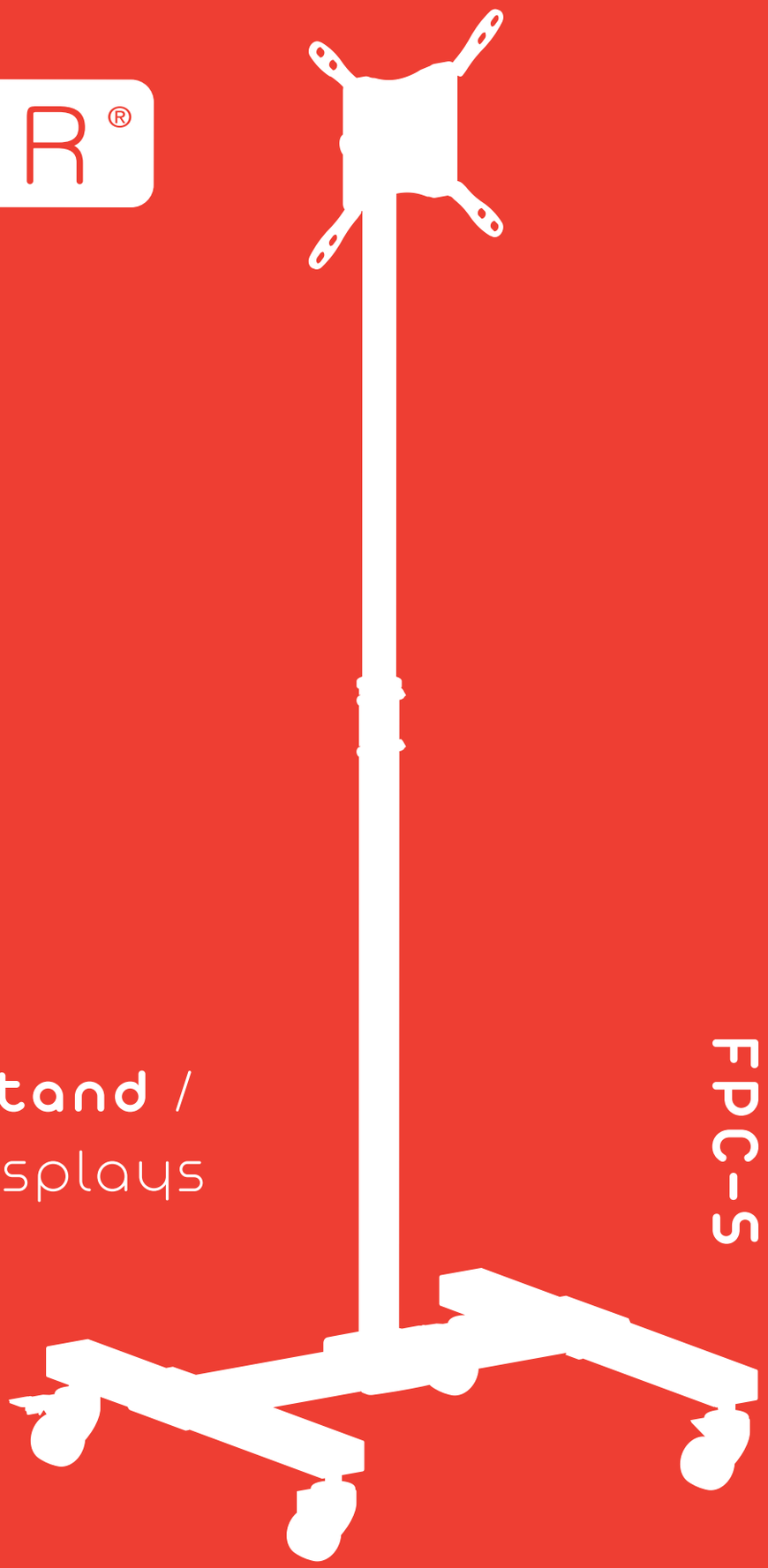

Flat Panel Cart and Stand /
for Small Flat-Panel Displays

FPC-S

Thank you for choosing Helder

The Helder Flat-Panel Cart and Stand provides adjustable height and upward tilt angles offering optimal viewing of flat-panel displays in department stores, restaurants and at trade shows. This is a great solution to show off your products at an event or display your menu to customers. It accommodates displays with screen sizes measuring 13 to 42 inches, and the sturdy steel construction supports a maximum weight up to 44 pounds. This stand includes adjustable feet and locking wheels so you can enjoy your display on uneven flooring or easily move it around the room.

If you have safety concerns about installing this product, contact a qualified professional or installation contractor. If this product is missing hardware or there are defective parts, call Customer Service at 212-594-2353.

Product Specifications

Compatible Flat Panel Display Size:

13 to 42 in. (33 to 106.7 cm)

Max Height:

52 in. (132.2 cm)

Min Height:

32.3 in. (82.2 cm)

Max Weight Capacity:

44 lb. (20 kg)

Caster Size:

2 in. (5 cm)

VESA Mounting Patterns:

75×75 mm
100×100 mm
200×100 mm
200×200 mm

Material: Steel

Weight:

14.5 lb. (6.6 kg)

Base Width:

19.7 in. (50 cm)

Base Depth:

17.9 in. (45.4 cm)

Safety Warnings

When installing this product, be sure to refer to the assembly instructions detailed in this manual; failure to abide by the assembly instructions may void the product's warranty.

Do not use this product for any flat-panel display other than what it is intended for; the exact specification, size parameters, and weight limits are found both on the product box and in the instruction manual.

It is strongly recommended that this product be installed by a qualified professional or installation contractor; Helder takes no responsibility for any product damage or personal injury resulting from mishandling, incorrect mounting, faulty assembly, or improper use of this product.

Safety Warnings (cont.)

It is recommended that at least 2 people perform the installation process to prevent injury from mishandling or dropping the product and/or flat-screen device.

This product may contain small parts which can pose a choking hazard; keep out of reach of children and pets.

Excessive exposure to liquids may damage the finish of this product; when cleaning this product, use only a mild detergent solution, and quickly wipe dry with a soft cloth.

All images are for illustrative purposes only.

Parts List

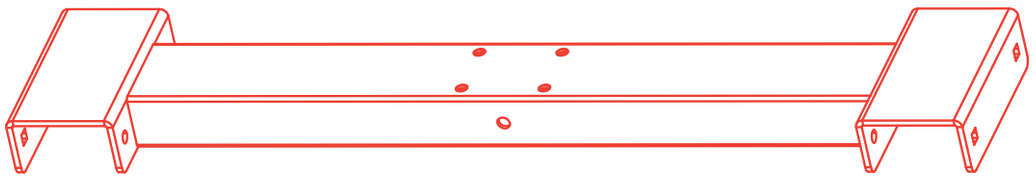

A. Cross bar



B. Legs (×2)

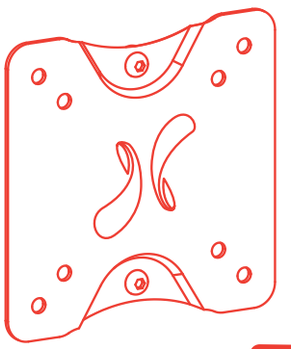

D. VESA plate



E. Wheel (×2)



F. Locking wheel (×2)

C. Adjustable riser

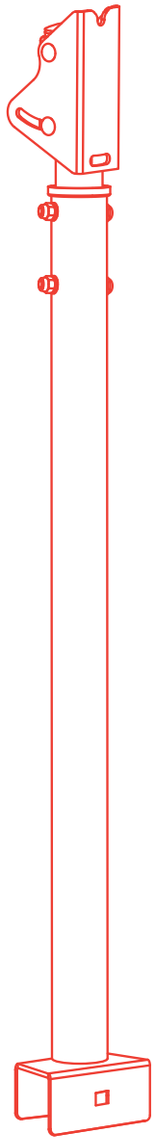

G. M5 × 10 mm bolt (×8)



H. M5 locking nut (×8)



I. D6 washer (×5)



J. M6 locking nut (×5)



K. M6 flange nut



L. M6 × 12 mm bolt (×4)

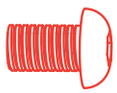

M. 4 mm hex wrench



N. Double box-end hex wrench



O. M6×65 mm carriage bolt (×5)

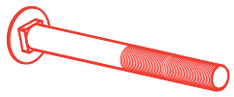

P. VESA adapter (×2)

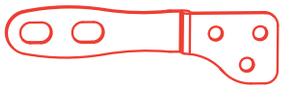

Q. VESA adapter (×2)



R. Cover



S. Feet (×4)

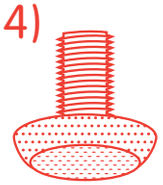

M-A. M4 × 14 mm screws (×4)



M-B. M5 × 14 mm screws (×4)



M-C. M6 × 14 mm screws (×4)

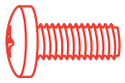

M-D. M8 × 20 mm screws (×4)

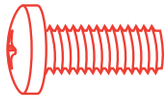

M-E. D5 washer (×4)



M-F. D8 washer (×4)



M-G. Spacer (×8)



Required Tools

14 mm crescent wrench



Phillips screwdriver



Assembling the Base

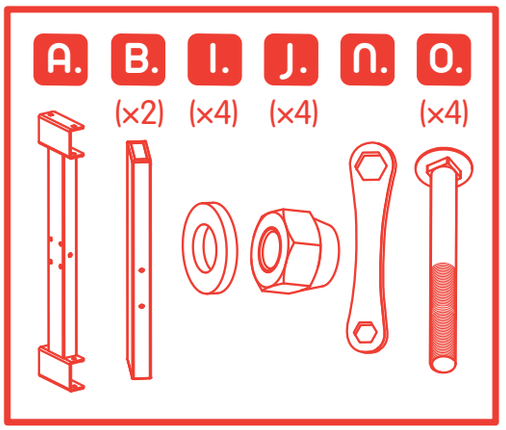

Step 1

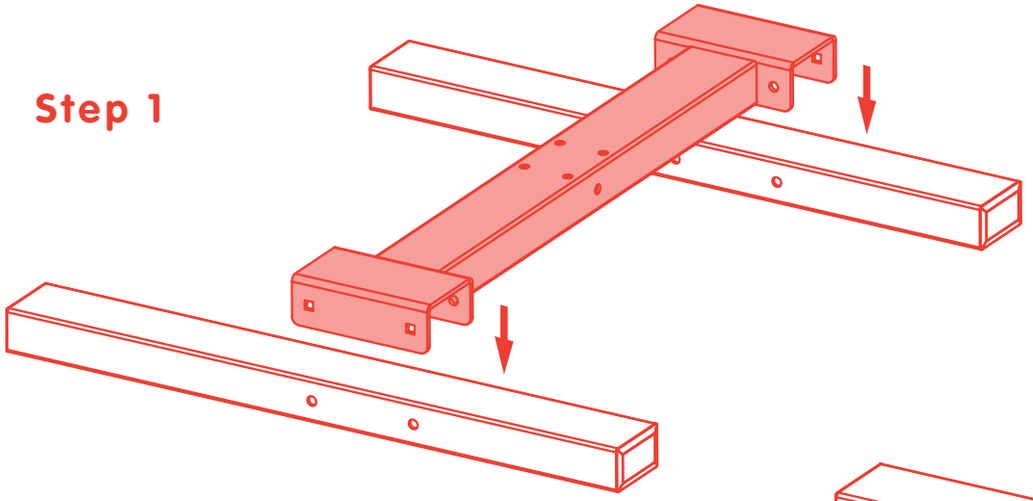

Step 2

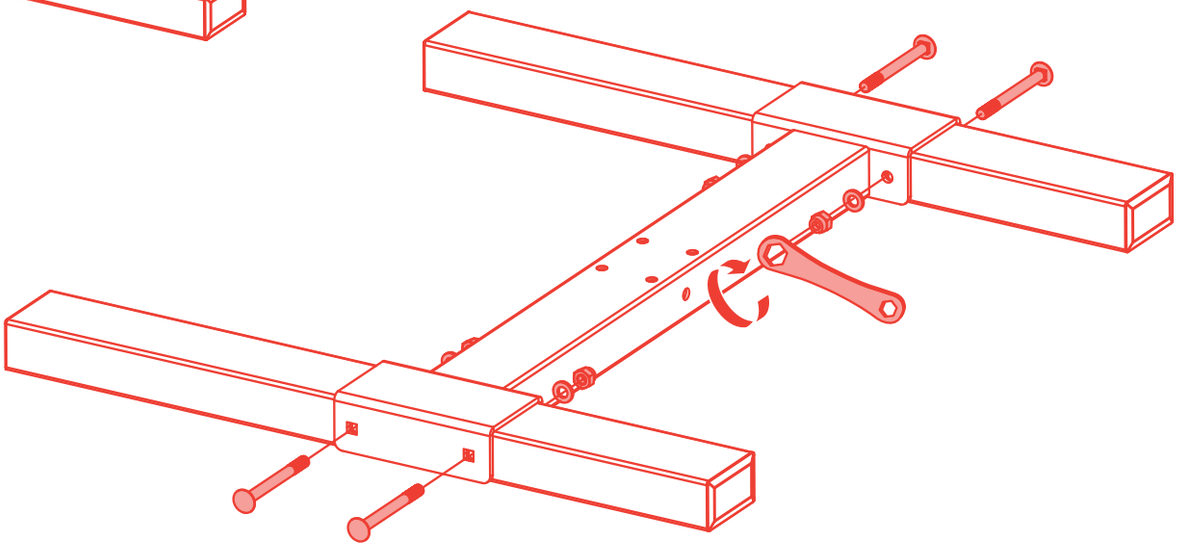

Attaching the Wheels

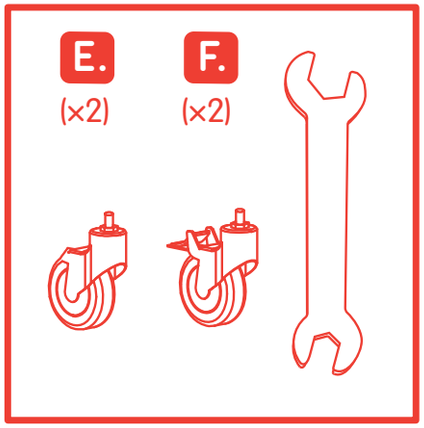

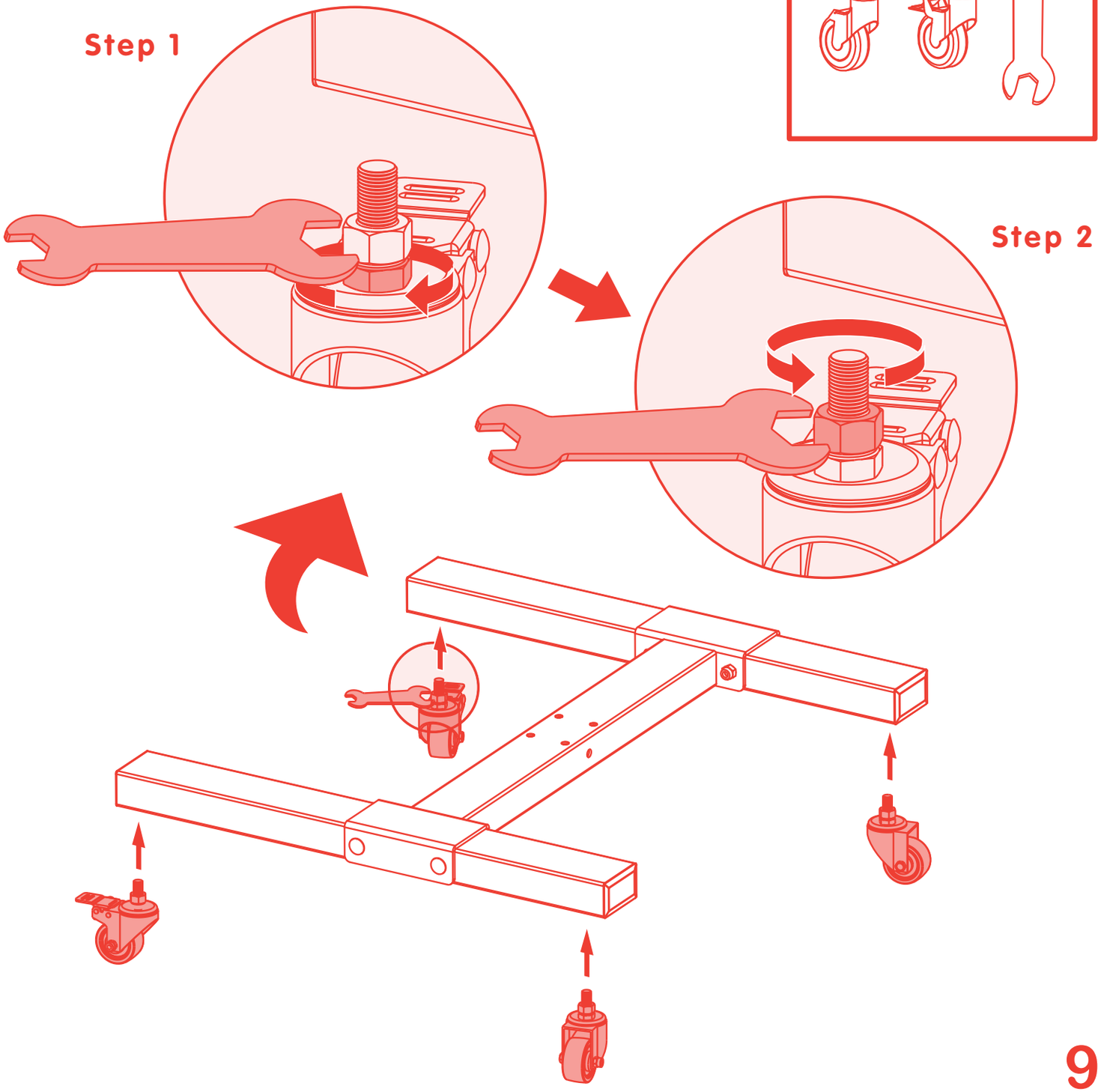

Attaching the Feet

S.
(×4)

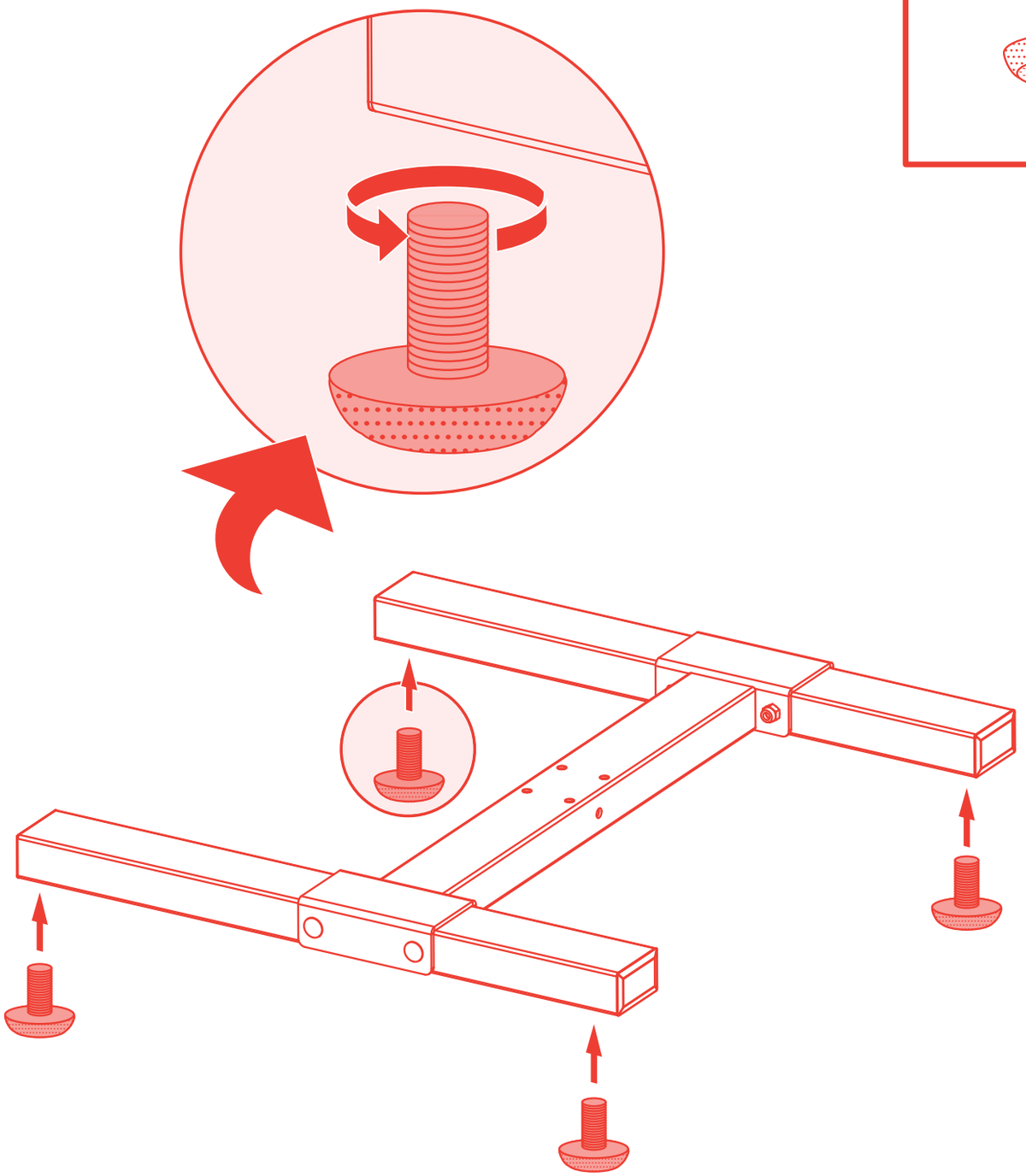

Attaching the Adjustable Riser

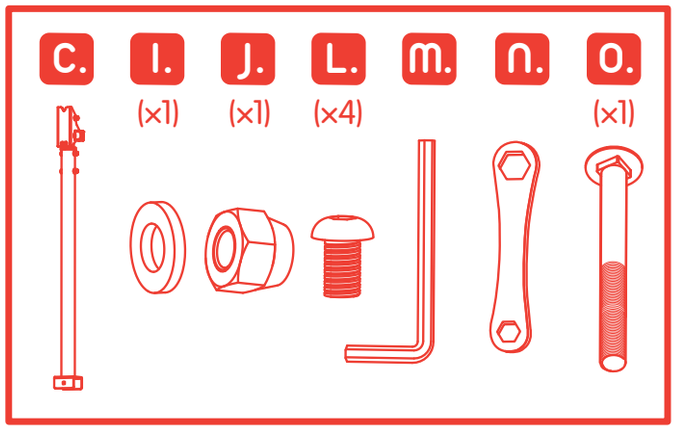

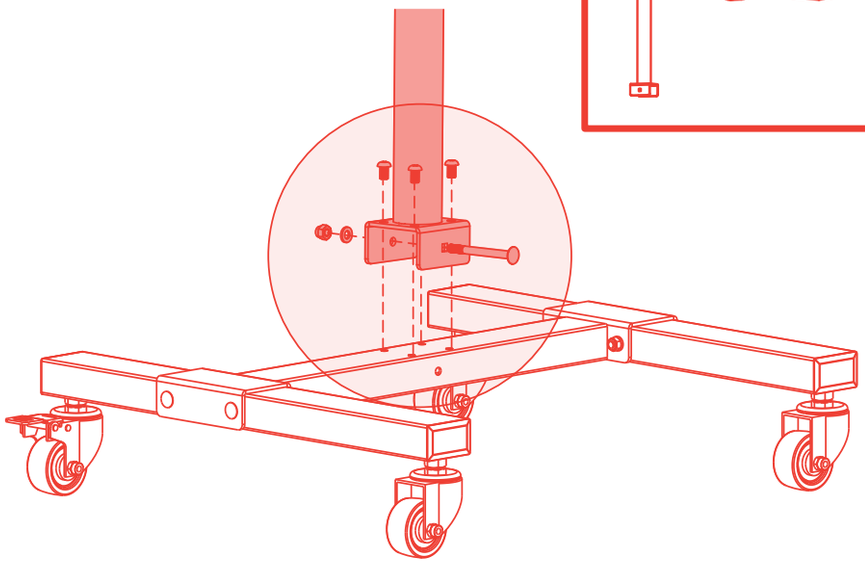

Step 1

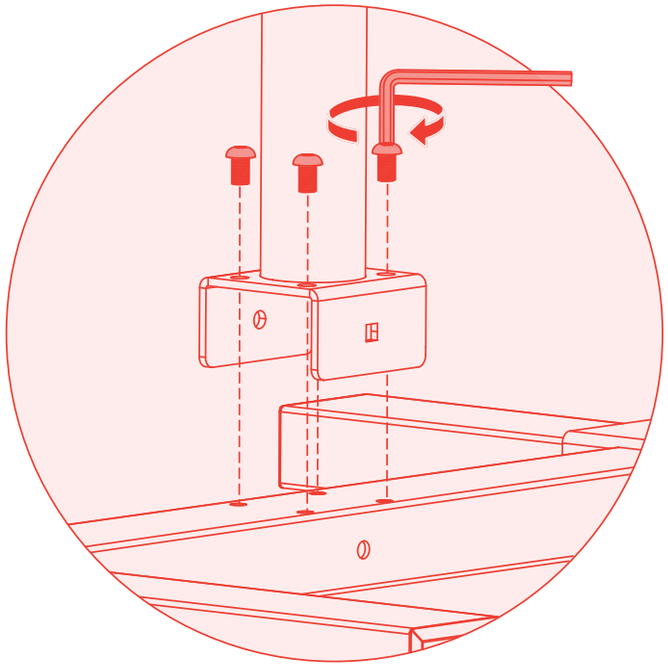

Step 2

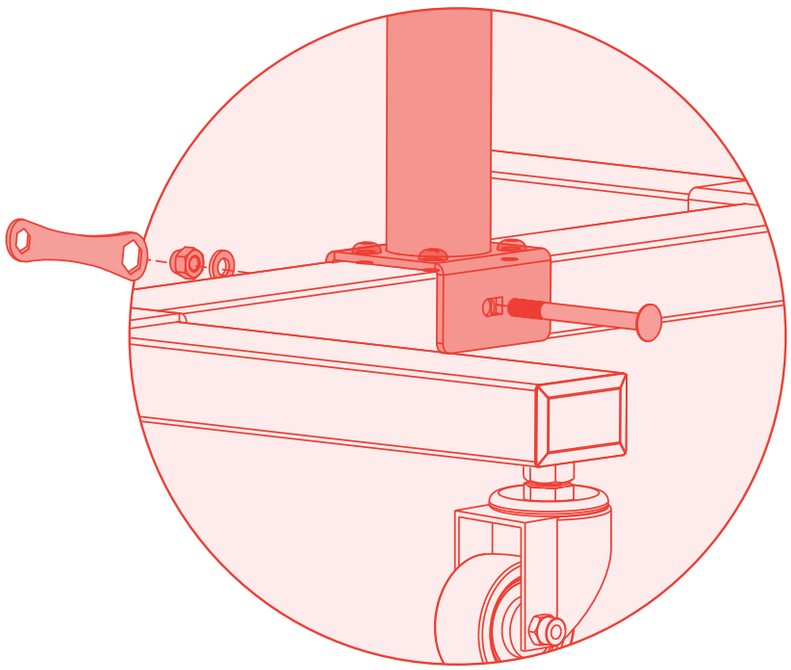

Attaching the Adjustable Riser (cont.)

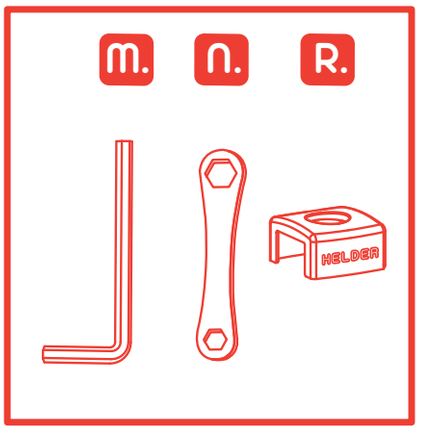

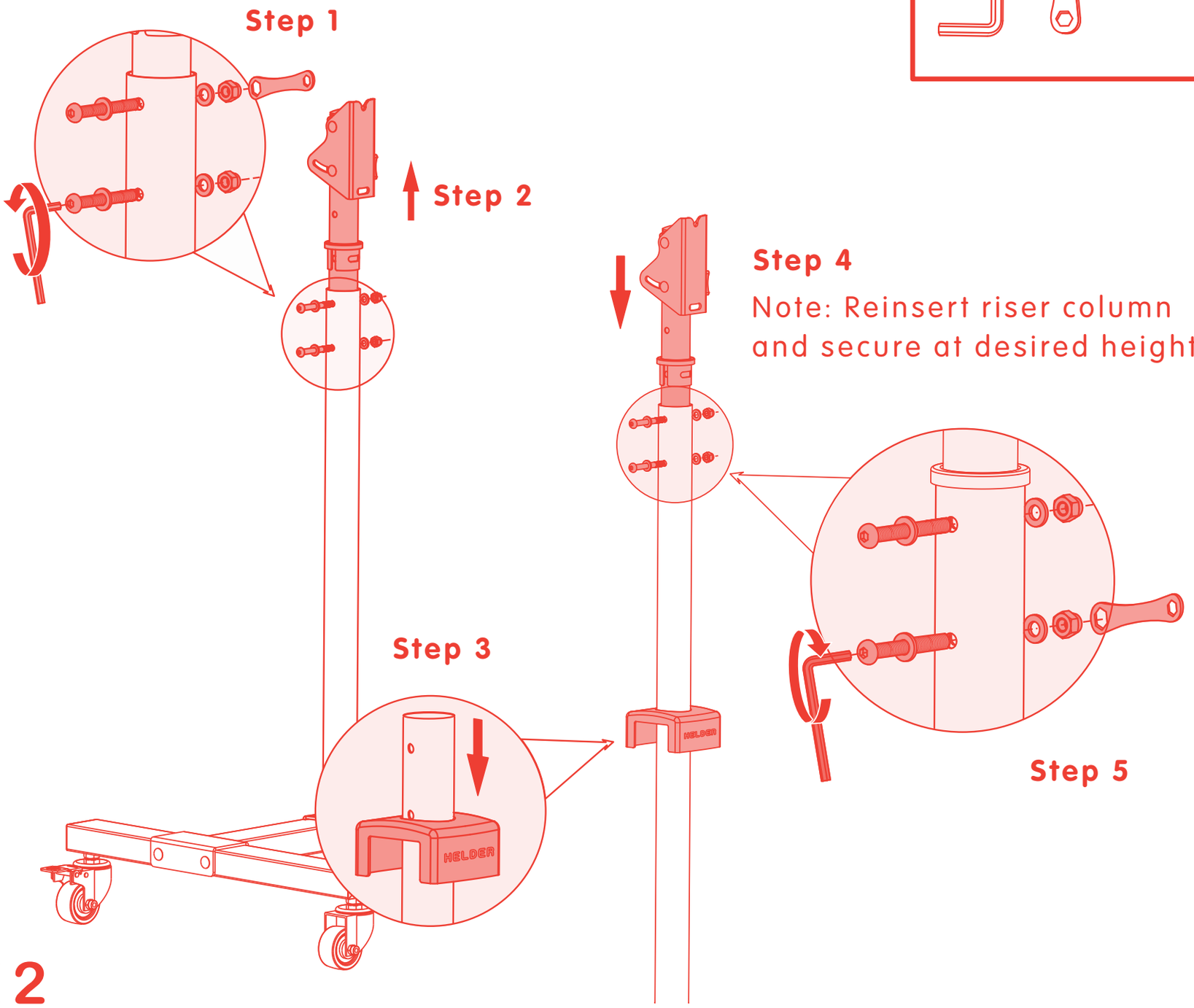

VESA Patterns

75 × 75
100 × 100
200 × 100
200 × 200

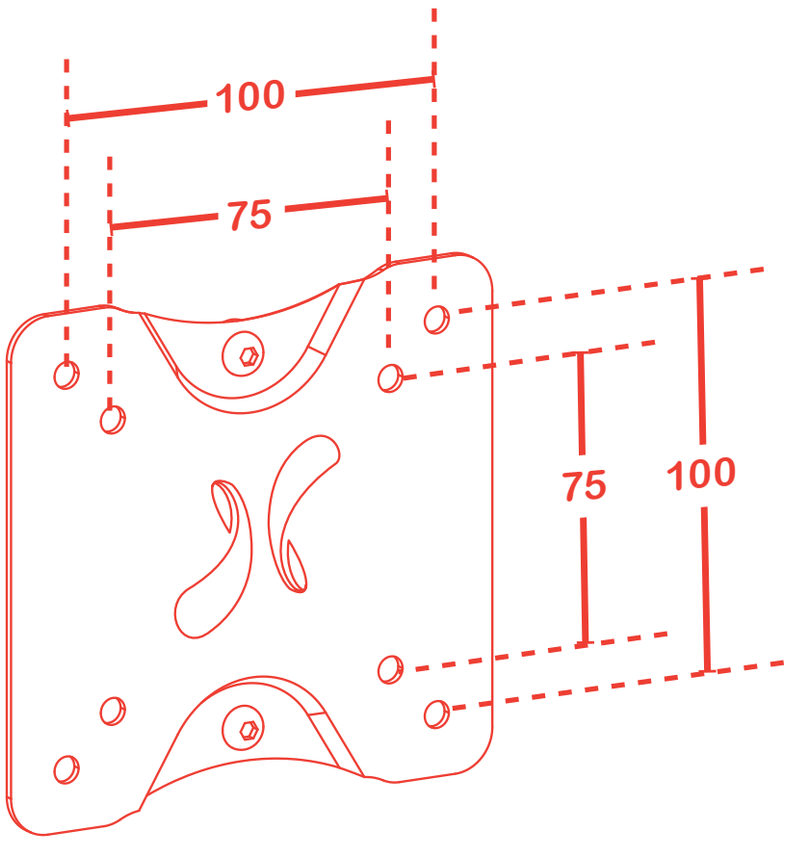

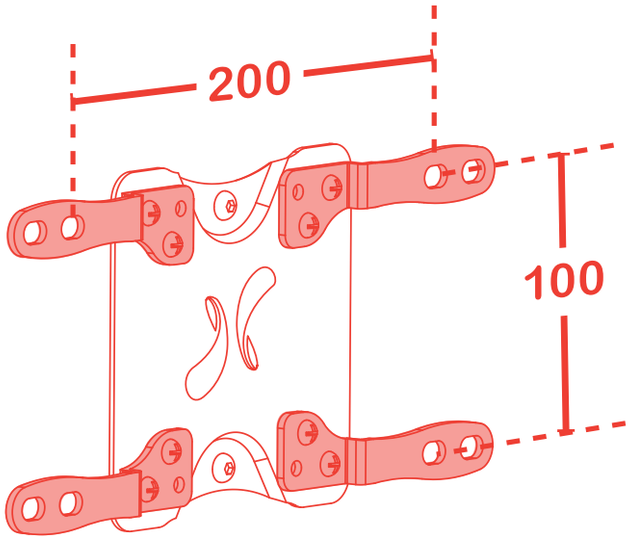

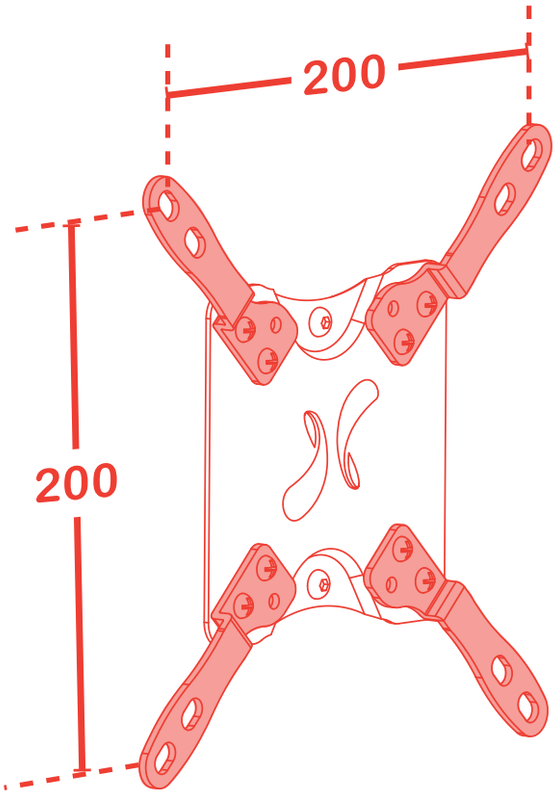

Attaching the VESA Plate Arms

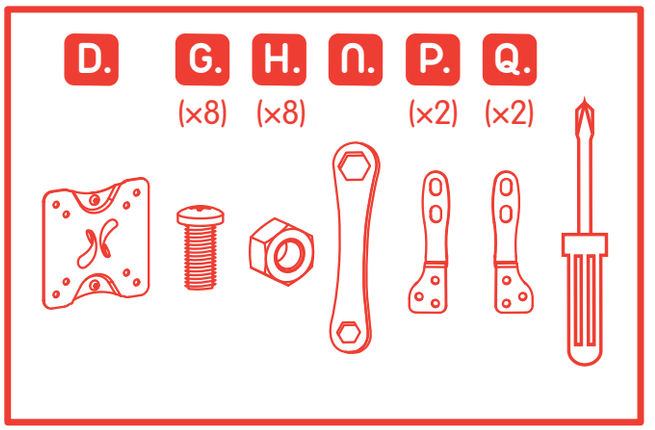

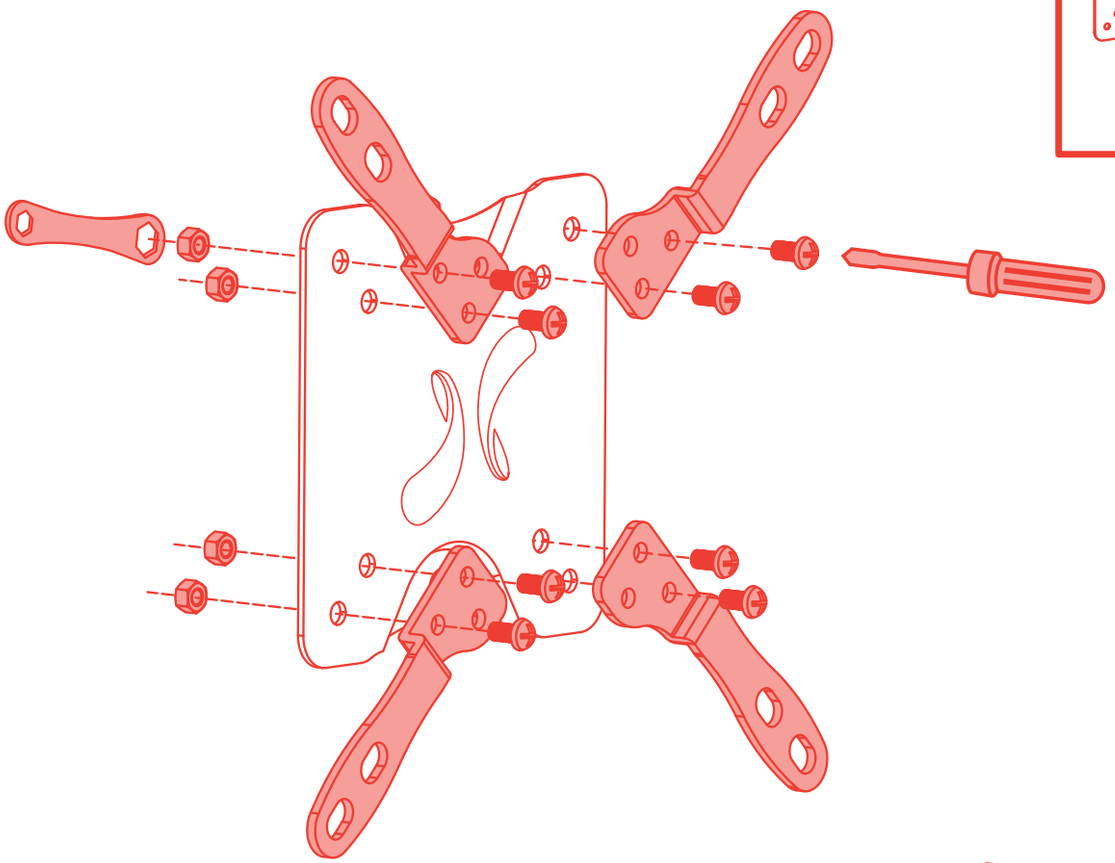

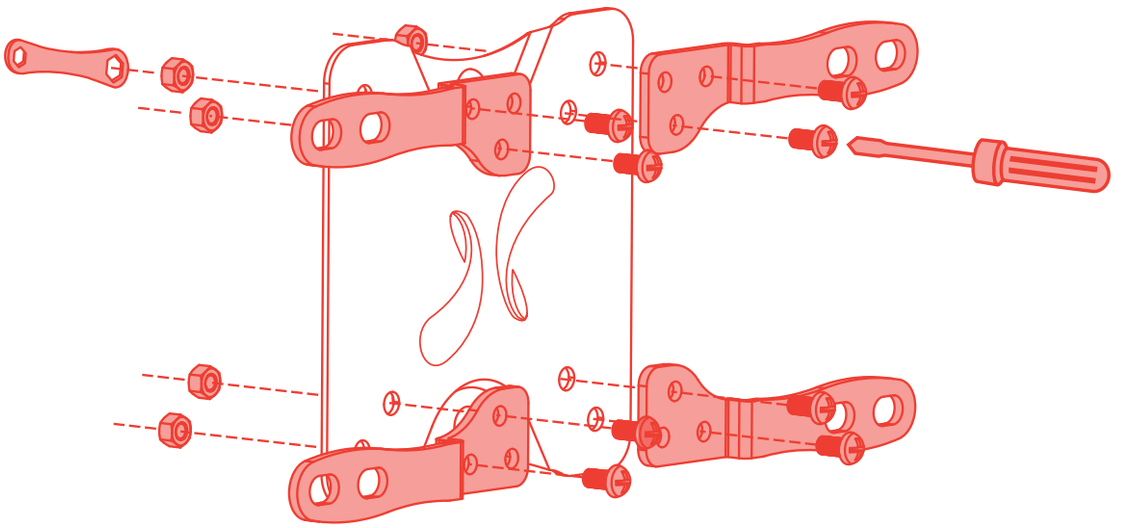

Attaching the VESA Plate

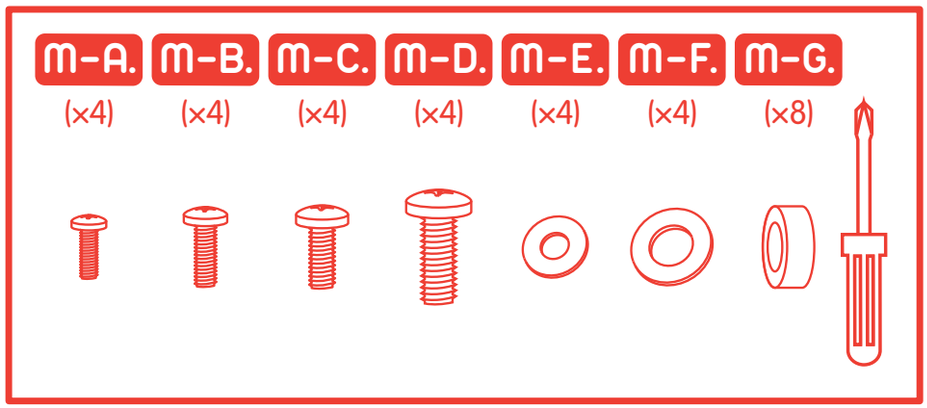

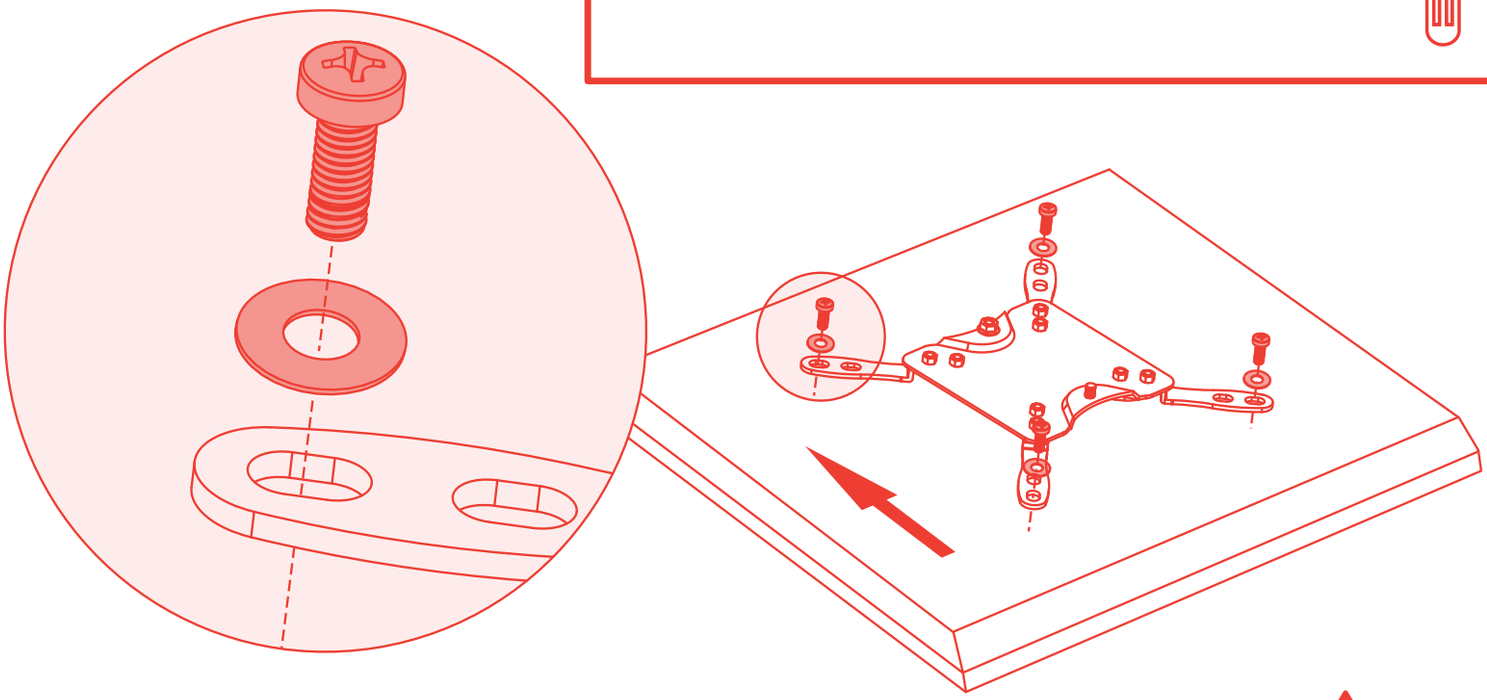

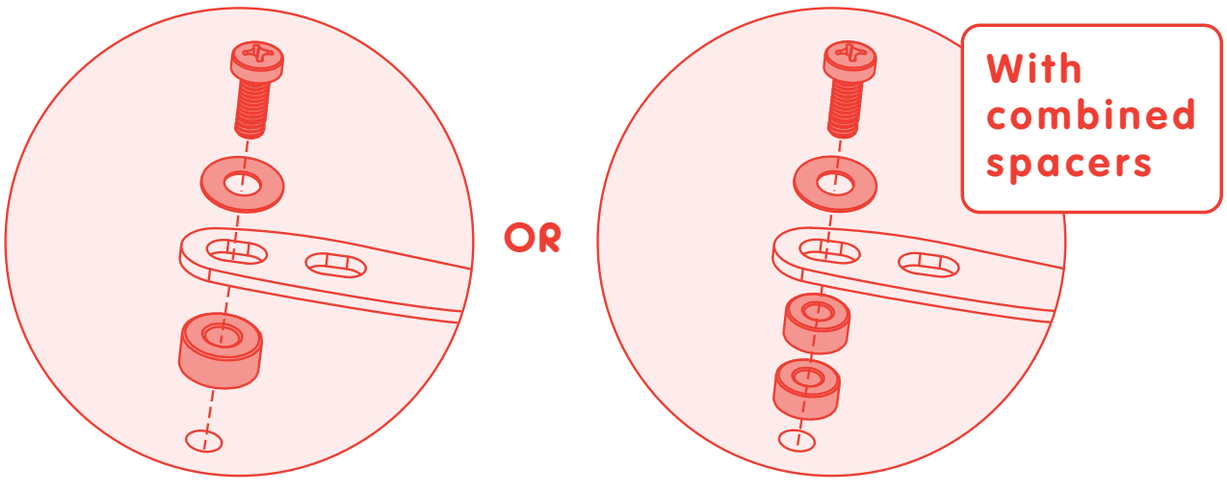

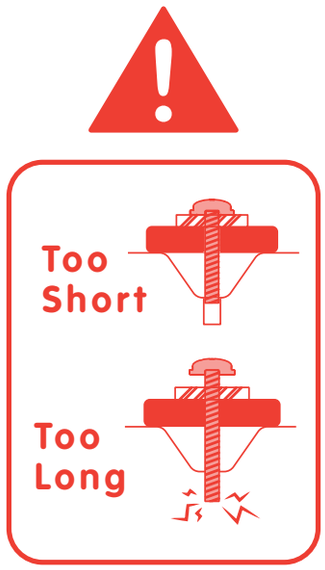

Mounting the Display on the Adjustable Riser

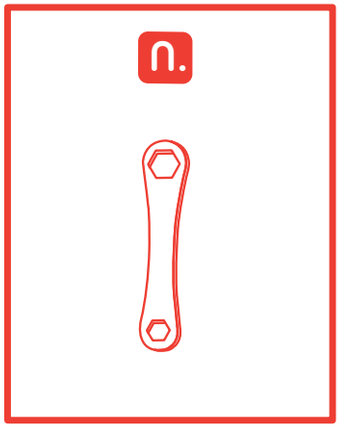



Important!

We recommend that two people perform these steps.

Step 1

Loosen

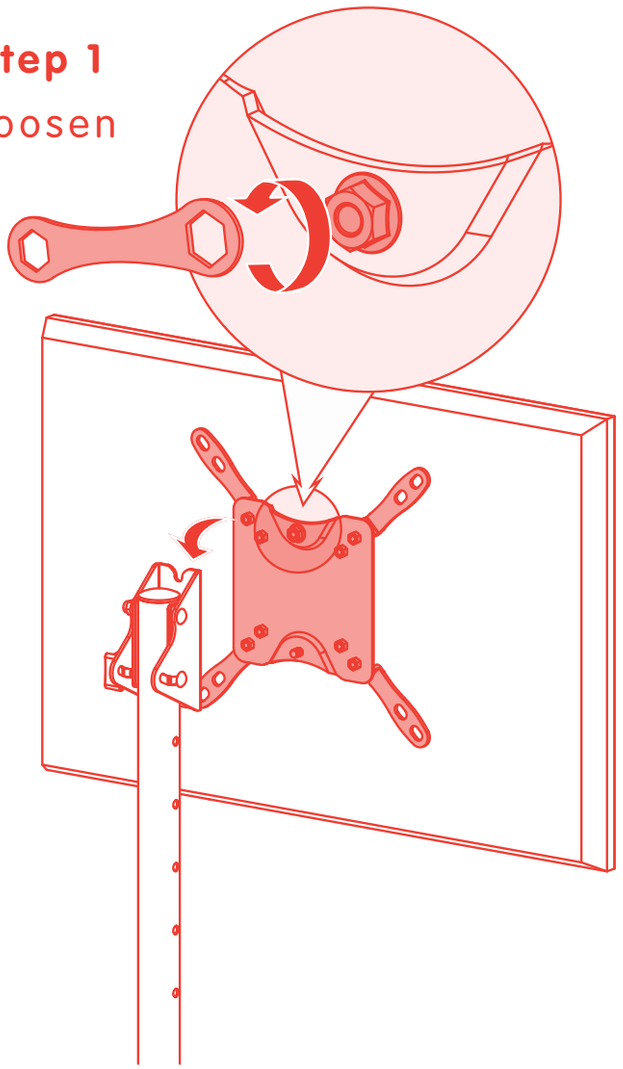

Step 2

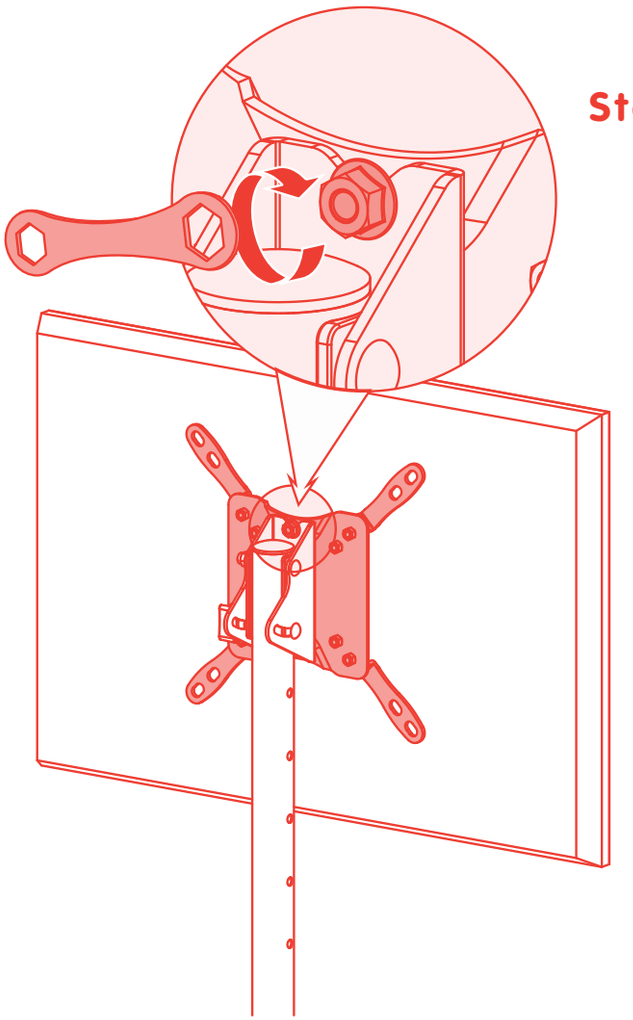

Horizontal Level Adjustment

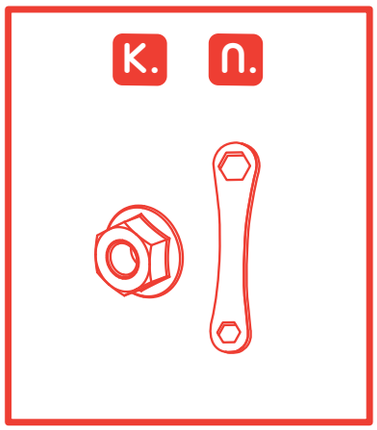

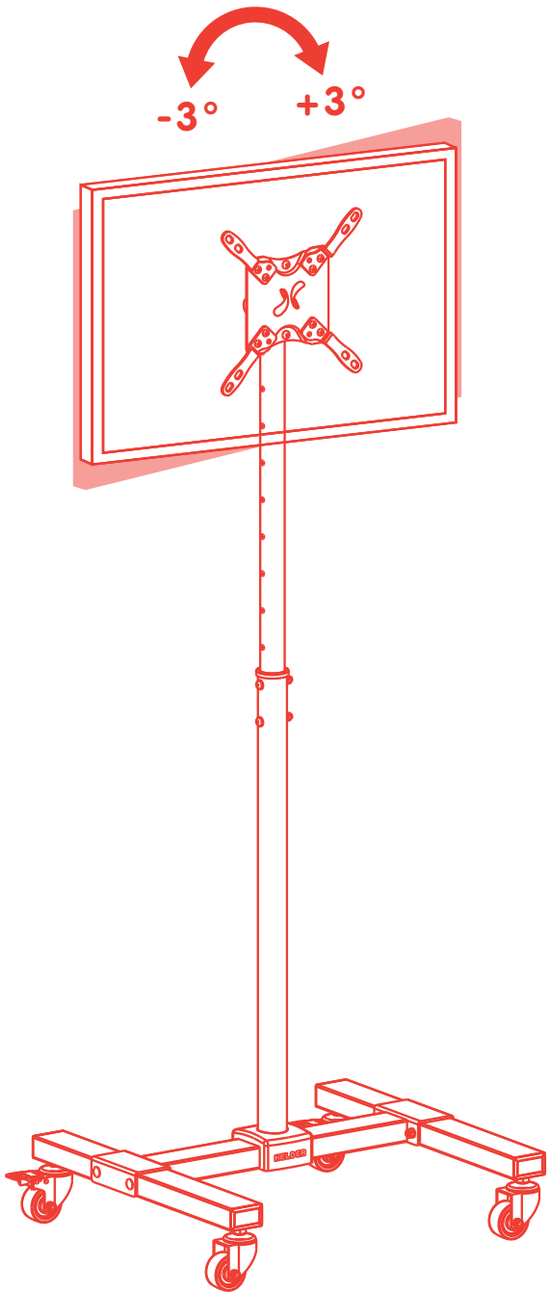

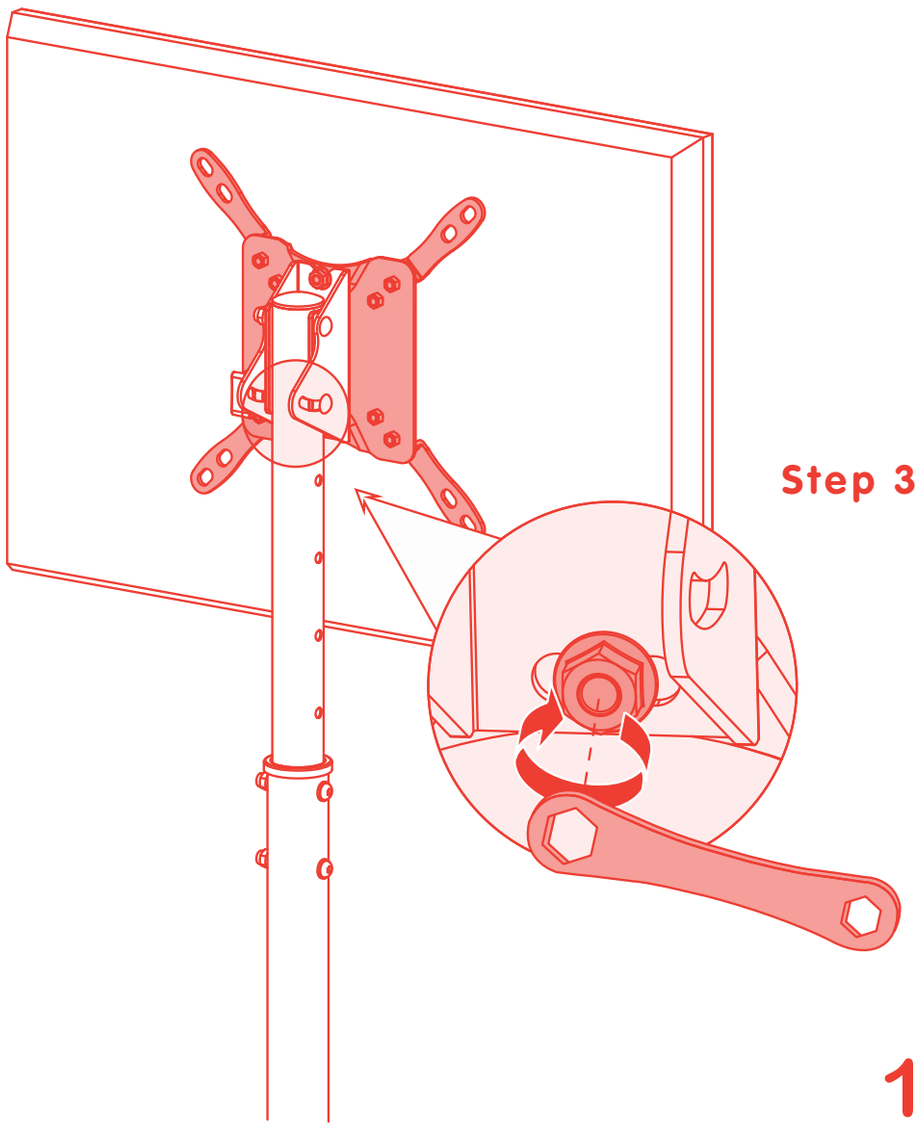

Step 3

Tilt Angle Adjustment

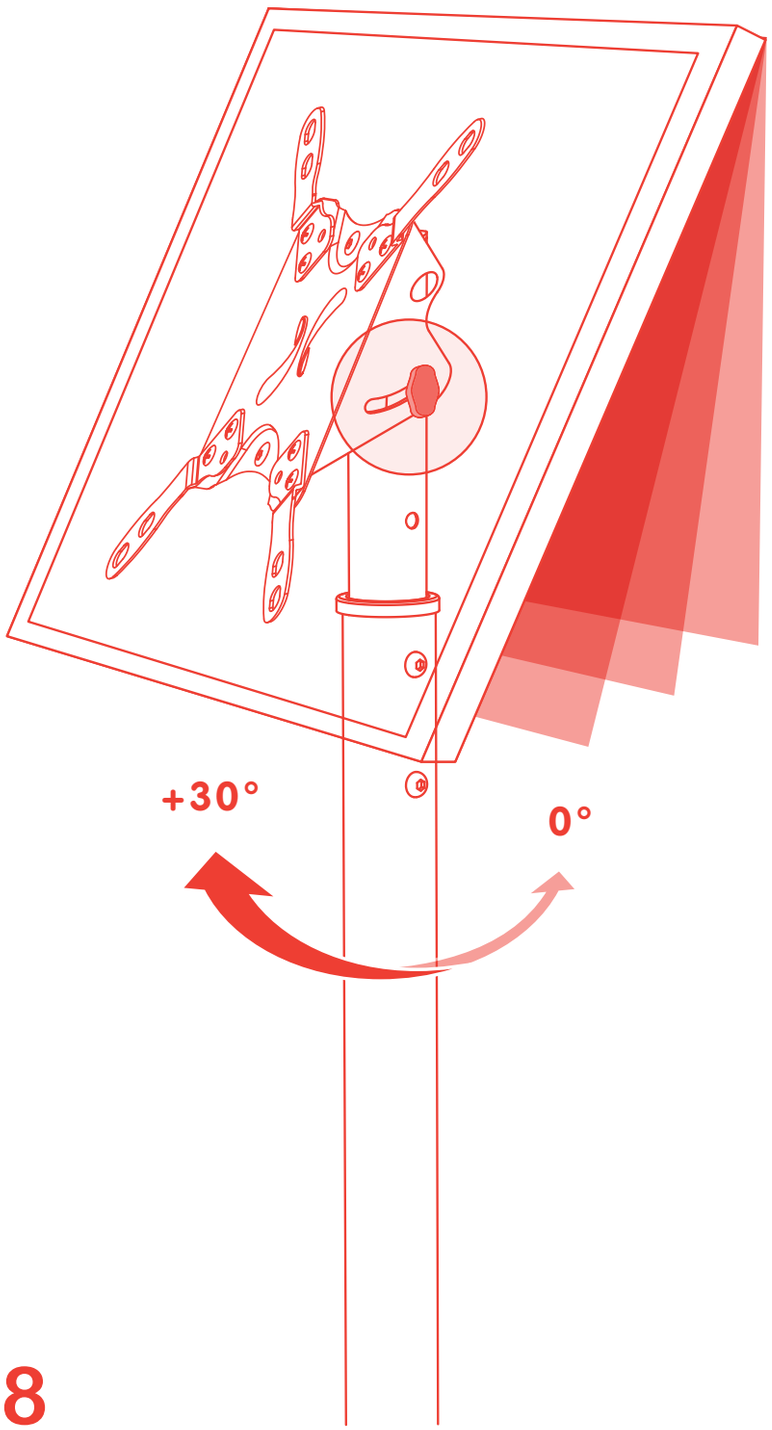

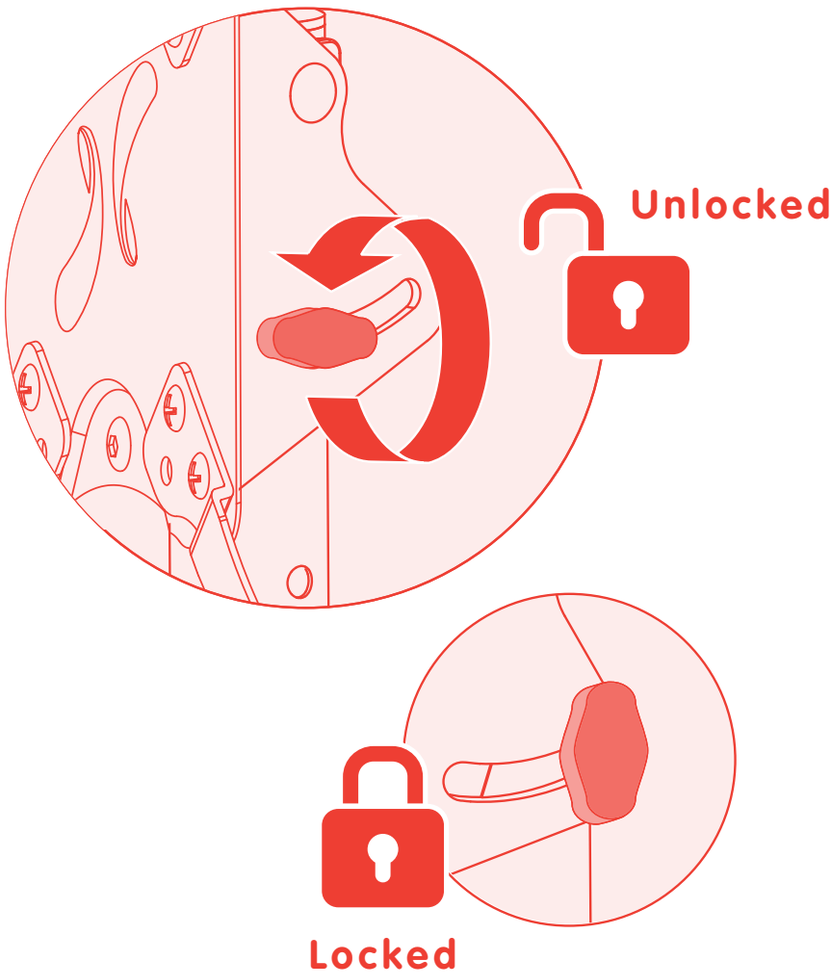

One-Year Limited Warranty

This Helder product is warranted to the original purchaser to be free from defects in materials and workmanship under normal consumer use for a period of One (1) year from the original purchase date or thirty (30) days after replacement, whichever occurs later. The warranty provider's responsibility with respect to this limited warranty shall be limited solely to repair or replacement, at the provider's discretion, of any product that fails during normal use of this product in its intended manner and in its intended environment. Inoperability of the product or part(s) shall be determined by the warranty provider. If the product has been discontinued, the warranty provider reserves the right to replace it with a model of equivalent quality and function. This warranty does not cover damage or defect caused by misuse, neglect, accident, alteration, abuse, improper installation or maintenance. EXCEPT AS PROVIDED HEREIN, THE WARRANTY PROVIDER MAKES NEITHER ANY EXPRESS WARRANTIES NOR ANY IMPLIED WARRANTIES, INCLUDING BUT NOT LIMITED TO ANY IMPLIED WARRANTY OF MERCHANTABILITY OR FITNESS FOR A PARTICULAR PURPOSE. This warranty provides you with specific legal rights, and you may also have additional rights that vary from state to state.

To obtain warranty coverage, contact the Helder Customer Service Department to obtain a return merchandise authorization ("RMA") number, and return the defective product to Helder along with the RMA number and proof of purchase. Shipment of the defective product is at the purchaser's own risk and expense.

For more information or to arrange service, call Customer Service at 212-594-2353.

Product warranty provided by the Gradus Group.
www.gradusgroup.com

HELDER

Helder is a registered trademark of the Gradus Group.

© 2022 Gradus Group LLC.
All Rights Reserved.


HELDER®
A Gradus Group Brand