HYDRO SPOT 2



User Manual

©2022 ADJ Products, LLC all rights reserved. Information, specifications, diagrams, images, and instructions herein are subject to change without notice. ADJ Products, LLC logo and identifying product names and numbers herein are trademarks of ADJ Products, LLC. Copyright protection claimed includes all forms and matters of copyrightable materials and information now allowed by statutory or judicial law or hereinafter granted. Product names used in this document may be trademarks or registered trademarks of their respective companies and are hereby acknowledged. All non-ADJ Products, LLC brands and product names are trademarks or registered trademarks of their respective companies.

ADJ Products, LLC and all affiliated companies hereby disclaim any and all liabilities for property, equipment, building, and electrical damages, injuries to any persons, and direct or indirect economic loss associated with the use or reliance of any information contained within this document, and/or as a result of the improper, unsafe, insufficient and negligent assembly, installation, rigging, and operation of this product.

DOCUMENT VERSION

Due to additional product features and/or enhancements, an updated version of this document may be available online.
Please check www.adj.com for the latest revision/update of this manual before beginning installation and/or programming.

Date	Document Version	Software Version	DMX Channels	Notes
06/30/2022	1.0	1.01	24 / 29 / 36 ch.	Initial Release
07/21/2022	1.1	N/C	No Change	Updated RDM and System Menu

Europe Energy Saving Notice
Energy Saving Matters (EuP 2009/125/EC)
Saving electric energy is a key to help protecting the enviroment. Please turn off all electrical products when they are not in use. To avoid power consumption in idle mode, disconnect all electrical equipment from power when not in use. Thank you!

TABLE OF CONTENTS

Introduction	4
Limited Warranty (USA Only)	5
Warranty Registration I Features	6
Safety Precautions	7
Overview	8
Installation	9
Remote Device Management (RDM)	12
Color Wheel	13
Animation Wheel	14
Gobos	15
Control Panel	18
System Menu	19
DMX Set Up	23
DMX Traits	25
White Color Temperature Presets	33
Dim Speeds	34
Dim Modes	35
Primary-Secondary Set Up I Multi Unit Power Linking	36
Maintenance Guidelines	37
Torque Settings for Screws	38
Error Codes	40
Dimensional Drawings	41
Specifications	42

INTRODUCTION

Unpacking: Thank you for purchasing the Hydro Spot 2 by ADJ Products, LLC. Every device has been thoroughly tested and has been shipped in perfect operating condition. Carefully check the shipping carton for damage that may have occurred during shipping. If the carton appears to have been damaged, carefully inspect your fixture for any damage and be sure all accessories necessary to operate the unit have arrived intact. In the event that damage has been found or parts are missing, please contact our toll free customer support number for further instructions. Do not return this unit to your dealer without first contacting customer support.

Introduction: ADJ's Hydro Spot 2 is an IP65-rated professional moving head luminaire powered by a potent 320-Watt cool white LED engine. **This product is intended to be used by professionally trained personnel only and is not suitable for private use.**

Customer Support: Contact ADJ Service for any product related service and support needs. Also visit **forums.adj.com** with questions, comments or suggestions.

Parts: To purchase parts online visit:
http://parts.adj.com (US)
http://www.adjparts.eu (EU)

ADJ SERVICE USA - Monday - Friday 8:00am to 4:30pm PST
Voice: 800-322-6337 I Fax: 323-582-2941 I support@adj.com

ADJ SERVICE EUROPE - Monday - Friday 08:30 to 17:00 CET
Voice: +31 45 546 85 60 I Fax: +31 45 546 85 96 I support@americandj.eu

ADJ PRODUCTS LLC USA
6122 S. Eastern Ave. Los Angeles, CA. 90040
323-582-2650 I Fax 323-532-2941 I www.adj.com I info@adj.com

ADJ SUPPLY Europe B.V
Junostraat 2 6468 EW Kerkrade, The Netherlands
+31 (0)45 546 85 00 I Fax +31 45 546 85 99
www.americandj.eu I info@americandj.eu

ADJ PRODUCTS GROUP Mexico
AV Santa Ana 30 Parque Industrial Lerma, Lerma, Mexico 52000
+52 (728) 282-7070

CAUTION! There are no user serviceable parts inside this unit. Do not attempt any repairs yourself, as doing so will void your manufacturer's warranty. In the unlikely event your unit may require service, please contact ADJ Products, LLC.

Do not discard the shipping cartoon in the trash. Please recycle when ever possible.

LIMITED WARRANTY (USA ONLY)

A. ADJ Products, LLC hereby warrants, to the original purchaser, ADJ Products, LLC products to be free of manufacturing defects in material and workmanship for a prescribed period from the date of purchase (see specific warranty period on reverse). This warranty shall be valid only if the product is purchased within the United States of America, including possessions and territories. It is the owner's responsibility to establish the date and place of purchase by acceptable evidence, at the time service is sought.

B. For warranty service, you must obtain a Return Authorization number (RA#) before sending the product back—please contact ADJ Products, LLC Service Department at 800-322-6337. Send the product only to the ADJ Products, LLC factory. All shipping charges must be prepaid. If the requested repairs or service (including parts replacement) are within the terms of this warranty, ADJ Products, LLC will pay return shipping charges only to a designated point within the United States. If the entire instrument is sent, it must be shipped in its original package and packaging material. No accessories should be shipped with the product. If any accessories are shipped with the product, ADJ Products, LLC shall incur no liability whatsoever for loss of or damage to any such accessories, nor for the safe return thereof.

C. This warranty is void if the product serial number and/or labels are altered or removed; if the product is modified in any manner which ADJ Products, LLC concludes, after inspection, affects the reliability of the product; if the product has been repaired or serviced by anyone other than the ADJ Products, LLC factory unless prior written authorization was issued to purchaser by ADJ Products, LLC; if the product is damaged because it was not properly maintained as set forth in the product instructions, guidelines and/or user manual.

D. This is not a service contract, and this warranty does not include maintenance, cleaning, or periodic check-up. During the period specified above, ADJ Products, LLC will replace defective parts at its expense with new or refurbished parts, and will absorb all expenses for warranty service and repair labor by reason of defects in material or workmanship. The sole responsibility of ADJ Products, LLC under this warranty shall be limited to the repair of the product, or replacement thereof, including parts, at the sole discretion of ADJ Products, LLC. All products covered by this warranty were manufactured after August 15, 2012, and bear identifying marks to that effect.

E. ADJ Products, LLC reserves the right to make changes in design and/or improvements upon its products without any obligation to include these changes in any products theretofore manufactured.

F. No warranty, whether expressed or implied, is given or made with respect to any accessory supplied with products described above. Except to the extent prohibited by applicable law, all implied warranties made by ADJ Products, LLC in connection with this product, including warranties of merchantability or fitness, are limited in duration to the warranty period set forth above. And all warranties, whether expressed or implied, including warranties of merchantability or fitness, are limited in duration to the warranty period set forth above. The consumer's and/or dealer's sole remedy shall be such repair or replacement as is expressly provided above; and under no circumstances shall ADJ Product, LLC be liable for any loss and/or damage, direct and/or consequential arising out of the use of, and/or inability to use this product.

G. This warranty is the only written warranty applicable to ADJ Products, LLC products, and supersedes all prior warranties and written descriptions of warranty terms and conditions heretofore published.

MANUFACTURER'S LIMITED WARRANTY PERIODS:

- Non-LED Lighting Products = 1-Year (365 Days) (Including Special Effect Lighting, Intelligent Lighting, UV lighting, Strobes, Fog Machines, Bubble Machines, Mirror Balls, Par Cans, Trussing, Lighting Stands, Power/Data Distribution, etc. excluding LED and lamps)
- Laser Products = 1-Year (365 Days) (excluding laser diodes which have a 6-Month Limited Warranty)
- LED Products = 2-Year (730 Days) (excluding batteries which have a 180 Day Limited Warranty)
- NOTE: 2-Year (730 Days) Limited Warranty ONLY applies to product purchased within the United States. StarTec Series = 1-Year (365 Days) (excluding batteries which have a 180 Day Limited Warranty)
- ADJ DMX Controllers = 2 Year (730 Days)
- American Audio Products = 1 Year (365 Days)

WARRANTY REGISTRATION

Please fill out the enclosed warranty card to validate your purchase. All returned service items, whether under warranty or not, must be freight pre-paid and accompanied by a return authorization (R.A.) number. The R.A. number must be clearly written on the outside of the return package. A brief description of the problem as well as the R.A. number must also be written down on a piece of paper included in the shipping carton. If the unit is under warranty, you must provide a copy of your proof of purchase invoice. You may obtain an R.A. number by contacting our customer support team. All packages returned to the service department not displaying an R.A. number on the outside of the package will be returned to the shipper.

FEATURES

- Motorized Focus
- 2 Frost Filters
- Motorized Zoom: 8° ~ 41°
- Animation Wheel
- 2 Prism FX: Rotating 5-facet Linear & rotating 6-facet Circular
- 0-100% smooth dimming
- Various strobe speeds
- 2 cooling fans

INCLUDED ITEMS

- Omega Bracket (x1)
- Locking Power Cable (x1)

IP RATING

An IP rated lighting fixture is commonly installed in outdoor environments and has been designed with an enclosure that effectively protects the ingress (entry) of external foreign objects such as dust and water. The Ingress Protection (IP) rating system is commonly expressed as “IP” followed by two numbers (i.e. IP65), where the numbers define the degree of protection. The first digit (Foreign Bodies Protection) indicates the extent of protection against particles entering the fixture and the second digit (Water Protection) indicates the extent of protection against water entering the fixture. **An IP65 rated lighting fixture, such as this one, has been designed and tested to protect against the ingress of dust (6) and low-pressure water jets from any direction (5).**

SAFETY PRECAUTIONS



PROTECTION CLASS 1 - FIXTURE MUST BE PROPERLY GROUNDED.



THERE ARE NO USER SERVICEABLE PARTS INSIDE THIS UNIT. DO NOT ATTEMPT ANY REPAIRS YOURSELF, AS DOING SO WILL VOID YOUR MANUFACTURER'S WARRANTY. DAMAGES RESULTING FROM MODIFICATIONS TO THIS FIXTURE AND/OR THE DISREGARD OF SAFETY INSTRUCTIONS AND GUIDELINES IN THIS MANUAL VOID THE MANUFACTURER'S WARRANTY AND ARE NOT SUBJECT TO ANY WARRANTY CLAIMS AND/OR REPAIRS.



NEVER LOOK DIRECTLY INTO THE LIGHT SOURCE!
RETINA INJURY RISK - MAY INDUCE BLINDNESS!
SENSITIVE PERSONS MAY SUFFER AN EPILEPTIC SHOCK!

- ***Maximum ambient operating temperature is -4° F to 113° F (-20° C to 45° C)!***
- DO NOT TOUCH the fixture housing during operation. Disconnect the power and allow approximately 15 minutes for the fixture to cool down before servicing.
- DO NOT shake the fixture, and avoid brute force when installing and/or operating the fixture.
- DO NOT operate the fixture if the power cord has become frayed, crimped and/or damaged. If the power cord is damaged, replace immediately with a new one of the same power rating.
- DO NOT attempt to remove or break off the ground prong from the electrical cord. This prong is used to reduce the risk of electrical shock and fire in case of an internal short.
- DO NOT attempt to operate this unit if it has been damaged in any way.
- DO NOT spill water or other liquids into or on to your unit.
- Disconnect from main power before making any type of connection.
- DO NOT block any air ventilation slots. All fan and air inlets must remain clean and never blocked. Allow approx. 6" (15cm) between fixture and other devices or a wall for proper cooling.
- Always be sure to mount this unit in an area that will allow proper ventilation.
- DO NOT remove the cover under for any reason.
- When installing fixture in a suspended enviroment, always use mounting hardware that is no less than M10 x 25mm, and always install fixture with an appropriately rated safety cable.
- Never plug this unit in to a dimmer pack.
- During long periods of non-use, disconnect the unit's main power.
- Always mount this unit in safe and stable matter.
- Power-supply cords should be routed so that they are not likely to be walked on or pinched by items placed upon or against them, paying particular attention to the point where they exit from the unit.
- Cleaning - The fixture should be cleaned only as recommended by the manufacturer.
- Heat - The appliance should be situated away from heat sources such as radiators, heat registers, stoves, or other appliances (including amplifiers) that produce heat.
- The fixture should be serviced by qualified service personnel when:
  A. The power-supply cord or the plug have been damaged.
  B. Objects have fallen onto, or liquid has been spilled into, the fixture.
  C. The fixture does not appear to operate normally or exhibits a marked change in performance.
  D. The fixture has fallen and/or has been subjected to extreme handling.

OVERVIEW

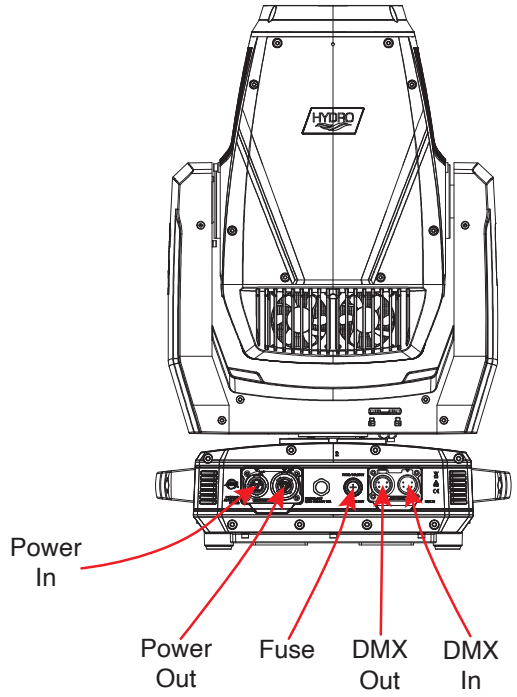
Power In
Power Out
Fuse
DMX Out
DMX In

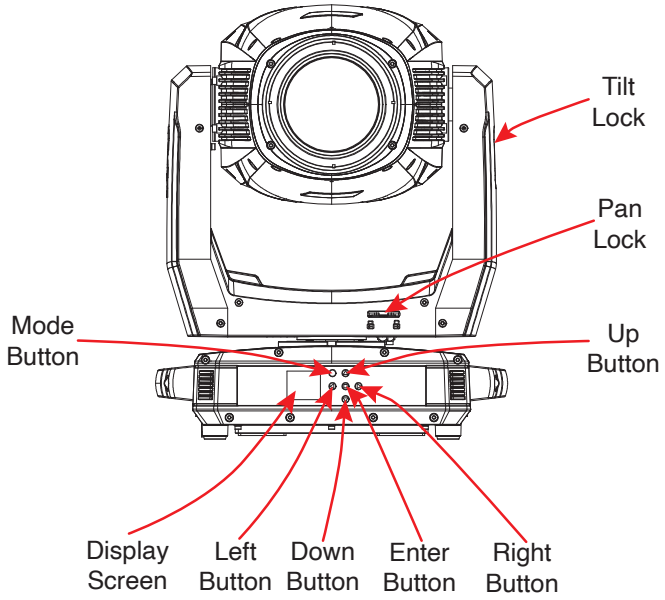
Tilt Lock
Pan Lock
Mode Button
Up Button
Display Screen
Left Button
Down Button
Enter Button
Right Button

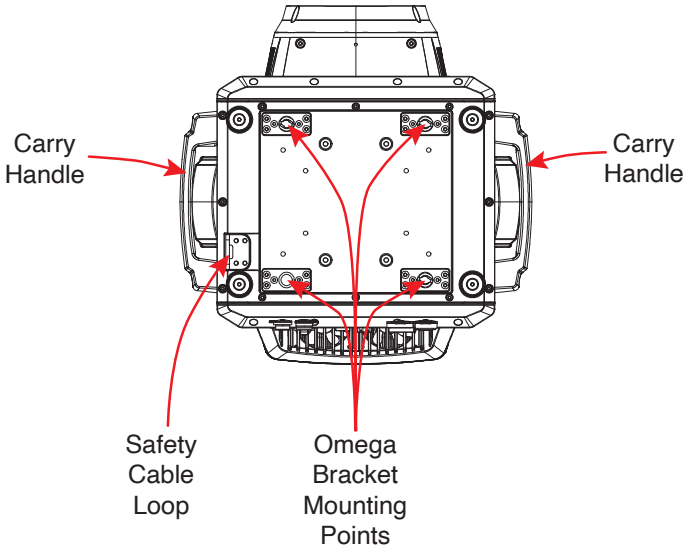
Carry Handle
Carry Handle
Safety Cable Loop
Omega Bracket Mounting Points

INSTALLATION



DO NOT INSTALL THE FIXTURE IF YOU ARE NOT QUALIFIED TO DO SO!

Fixture MUST be installed following all local, national, and country commercial electrical and construction codes and regulations.

When installing the unit, the trussing or area of installation must be able to support at least 10 times the weight of the unit and any attached accessories without any deformation. The unit must be secured with a secondary safety attachment, e.g. an appropriately-rated safety cable.

Before rigging/mounting a fixture to any metal truss/structure or placing the fixture(s) on any surface, a professional equipment installer MUST be consulted to determine if the metal truss/structure or surface is properly certified to safely hold the combined weight of the fixture(s), clamps, cables, and accessories.

Maximum ambient operating temperature is ***-4° F to 113° F (-20° C to 45° C).***

Fixture(s) should be installed away from walking paths, seating areas, or areas where unauthorized personnel might reach the fixture by hand.

NEVER stand directly below the fixture(s) when rigging, removing, or servicing.

Overhead fixture installation must always be secured with a secondary safety attachment, such as an appropriately rated safety cable that can hold at least 10 times the weight of the fixture.

Overhead mounting requires extensive experience, including calculating working load limits, knowledge of installation material being used, and perodic safety inspection of all installation material as well as the unit itself. If you lack these qualifications, do not attempt the installation yourself.

The installaiton should be checked by a skilled person once a year.

INSTALLATION

CLAMP MOUNTING

This fixture features mounting points on the underside for the attachment of two Omega brackets. Additionally, the unit also features a safety cable loop on the underside, near one of the carry handles (see the illustration below). When mounting the fixture to a truss or any other suspended or overhead installation, be sure to secure appropriately rated mounting clamps (not included) to each Omega bracket. ***Please note that two Omega brackets and two mounting clamps are needed to safely support the fixture in a suspended installation.*** Attach a separate **SAFETY CABLE** of the appropriate weight rating to the provided safety cable loop. ***NEVER*** use carry handles as an attachment points for the safety cable.

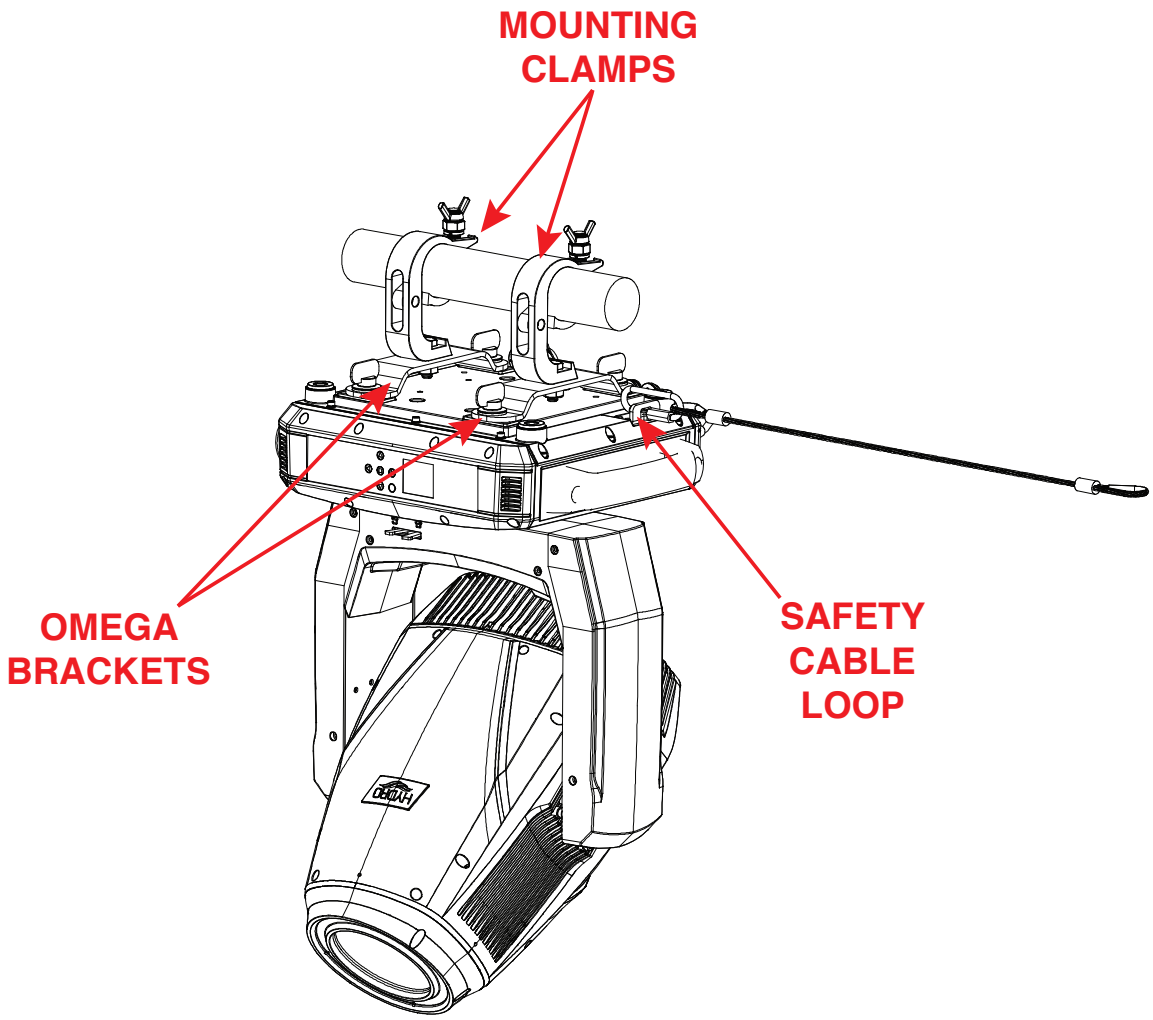

SAFETY CABLE:

ALWAYS ATTACH A SAFETY CABLE WHENEVER INSTALLING THIS FIXTURE IN A SUSPENDED ENVIRONMENT TO ENSURE THAT THE FIXTURE WILL NOT FALL IF THE CLAMP FAILS.

INSTALLATION

POTENTIAL INTERNAL FIXTURE DAMAGE FROM EXTERNAL SOURCES OF LIGHT BEAMS

External sources of light beams from direct sunlight, lighting and moving head fixtures, and lasers, which are focused directly towards the exterior housing and/or penetrate the front lens opening of ADJ lighting fixtures, can cause severe internal damage including burning of optics, dichroic color filters, glass and metal gobos, prisms, animation wheels, frost filters, iris, shutters, motors, belts, wiring, discharge lamps, and LEDs.

This issue is not specific only to ADJ lighting fixtures, but rather it is a common issue with lighting fixtures from all manufacturers. Although there is no true way to fully prevent this issue from happening, the guidelines below can reduce the risk of potential damage. Contact ADJ Service for more details.

DO NOT EXPOSE THE FIXTURE AND/OR FRONT LENS OPENING TO LIGHT BEAMS FROM DIRECT SUNLIGHT, OTHER LIGHTING OR MOVING HEAD FIXTURES, AND LASERS DURING UNPACKING, INSTALLATION, USE, AND EXTENDED IDLE TIMES OUTDOORS. DO NOT FOCUS A LIGHT BEAM FROM ONE LIGHTING FIXTURE DIRECTLY TOWARDS ANOTHER.

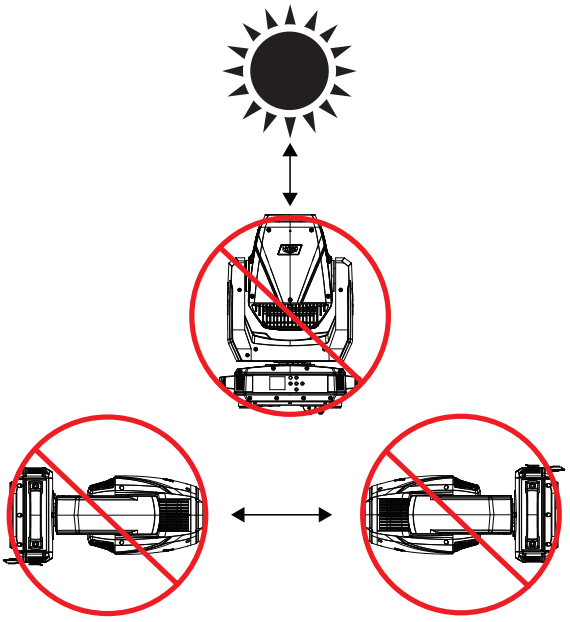

SUN PROTECTION MODE/ HIBERNATION MODE:
This state can be set via DMX, or the device will go into this state after 3 minutes without a DMX signal. This function can be switched on or off in the DMX traits (see the ***DMX Traits*** section for details). When the sun protection is activated, the pan-and-tilt function of the moving-head will position the lens away from direct sunlight, or other high intensity light source, to protect the internal belts, electronics etc. from burn damage.

When the unit is in the 'sun protection state', it uses its accelerometer sensors (X-Y-Z) (only present on discharge units and IP units) to position the front lens downwards, even when the unit(s) will be moved from its position. This will keep on changing the position of the head.

Please note that 'manual mode' overrides the 'sun-protection mode'. The hibernation function is an existing feature that puts the unit into a 'sleep state' to save power (this is a state where only the electronics remain on, and all other functions are turned off, functions such as motors lamps etc). This state is automatically activated when no DMX signal is present for the set time (1-99min or off).

REMOTE DEVICE MANAGEMENT (RDM)

NOTE: In order for RDM to work properly, RDM enabled equipment must be used throughout the entire system, including DMX data splitters and wireless systems.

Remote Device Management (RDM) is a protocol that sits on top of the DMX512 data standard for lighting, allowing the DMX systems of the fixtures to be modified and monitored remotely. This protocol is ideal for instances in which a unit is installed in a location that is not easily accessible.

With RDM, the DMX512 system becomes bi-directional, allowing a compatible RDM enabled controller to send out a signal to devices on the wire, as well as allowing the fixture to respond (known as a *GET* command). The controller can then use its *SET* command to modify settings that would typically have to be changed or viewed directly via the unit's display screen, including the DMX Address, DMX Channel Mode, and Temperature Sensors.

FIXTURE RDM INFORMATION:

RDM Code	Device ID	Device Model ID	Personality ID
0x1900	250000	1550	Basic (1) Standard (2) Extended (3)

Please be aware that not all RDM devices support all RDM features, and therefore it is important to check beforehand to ensure that the equipment that you are considering includes all of the features that you require.

The following parameters are accessible in RDM on this device:

[0x0015] Comms Status	[0x00E1] DMX Personality Description
[0x0020] Queued Messages	[0x0200] Sensor Definition
[0x0030] Status Message	[0x0201] Sensor Value
[0x0031] Status ID Description	[0x0400] Device Hours
[0x0032] Clear Status ID	[0x0405] Device Power Cycles
[0x0080] Device Model Description	[0x0500] Display Invert
[0x0081] Manufacturer Label	[0x0501] Display Level
[0x0082] Device Label	[0x0600] Pan Invert
[0x0090] Factory Defaults	[0x0601] Tilt Invert
[0x00C1] Booy Software Version ID	[0x1001] Reset Device
[0x00E0] DMX Personality	

COLOR WHEEL

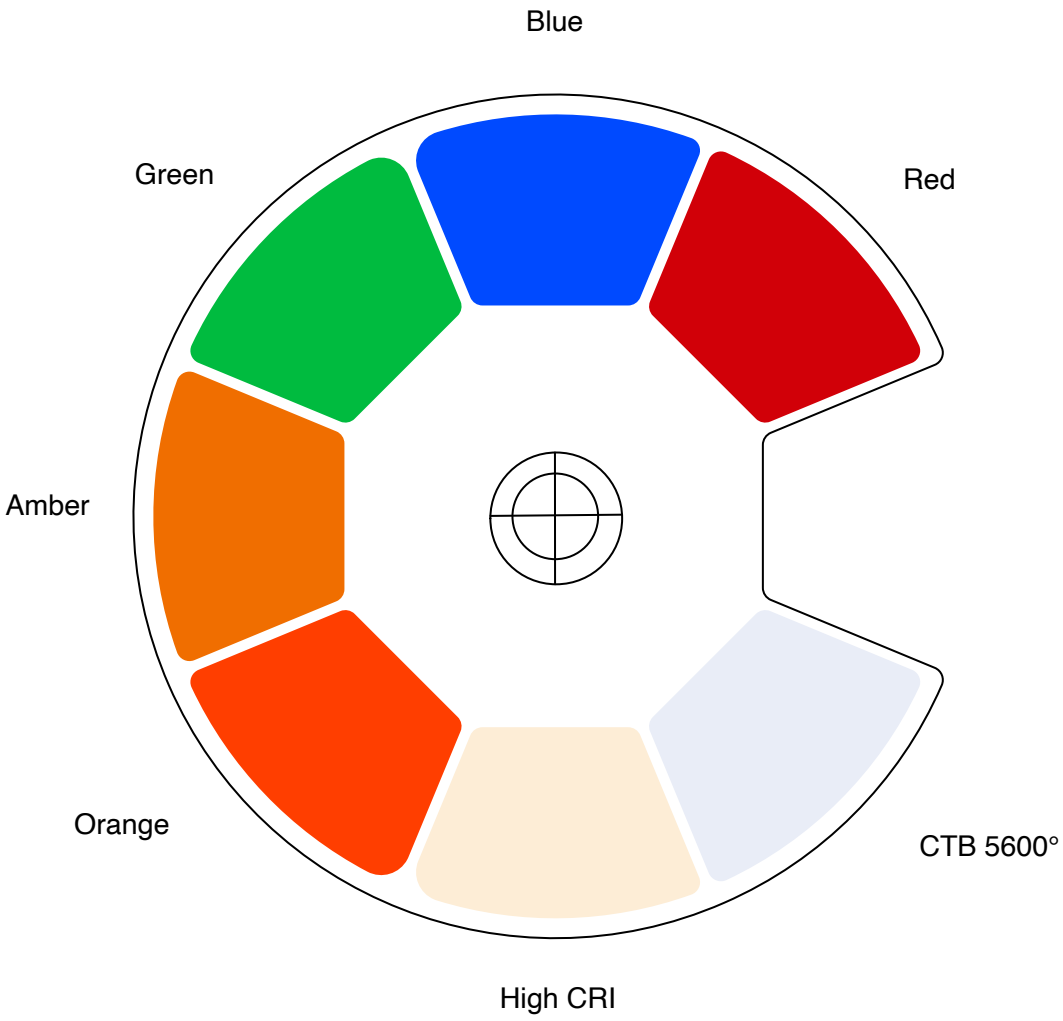

ANIMATION WHEEL

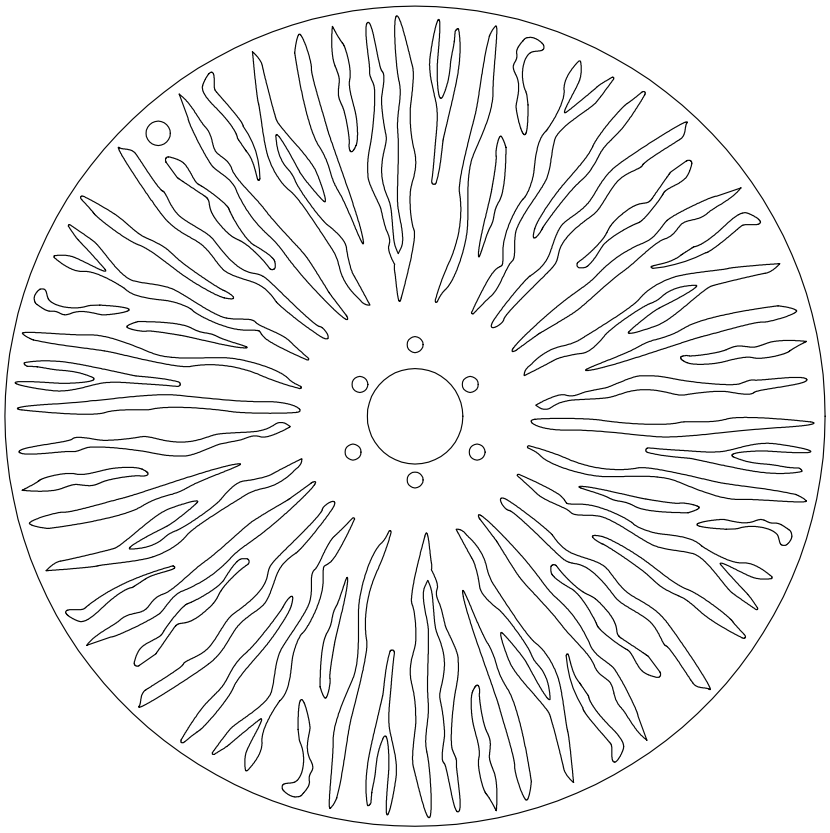

GOBOS

DESIGNS

GOBO WHEEL 1 - ROTATING GOBOS

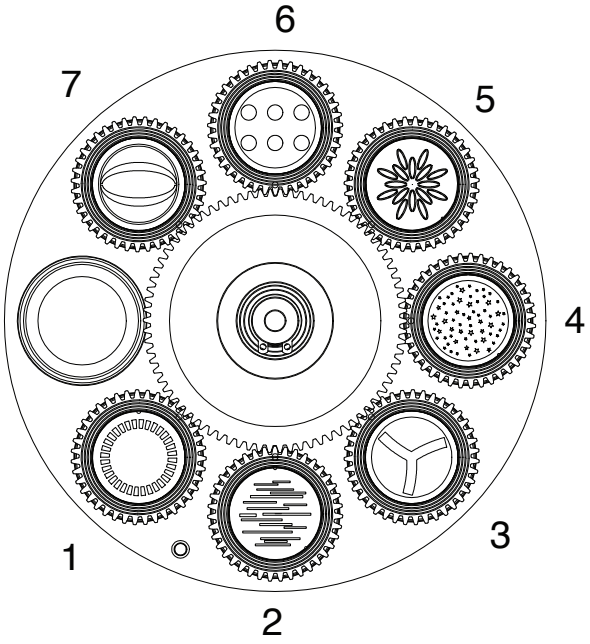

GOBO WHEEL 2 - FIXED GOBOS

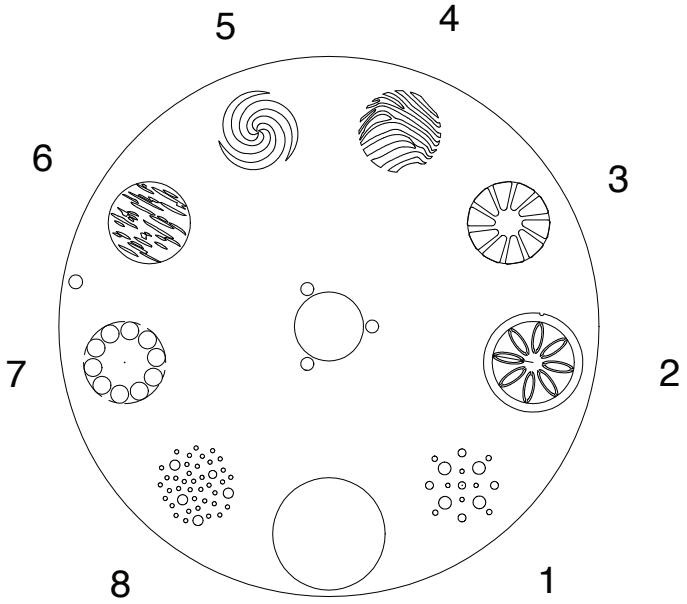

GOBO DIMENSIONS			
Gobo Type	**Thickness**	**Inner (Viewable) Diameter**	**Outer Diameter**
Rotating	0.02in (0.5mm)	0.75in (19.0mm)	0.91in (23.0mm)
Fixed	0.03in (0.8mm)	0.75in (19.0mm)	N/A

GOBOS

ROTATING GOBO HOLDER DIMENSIONS

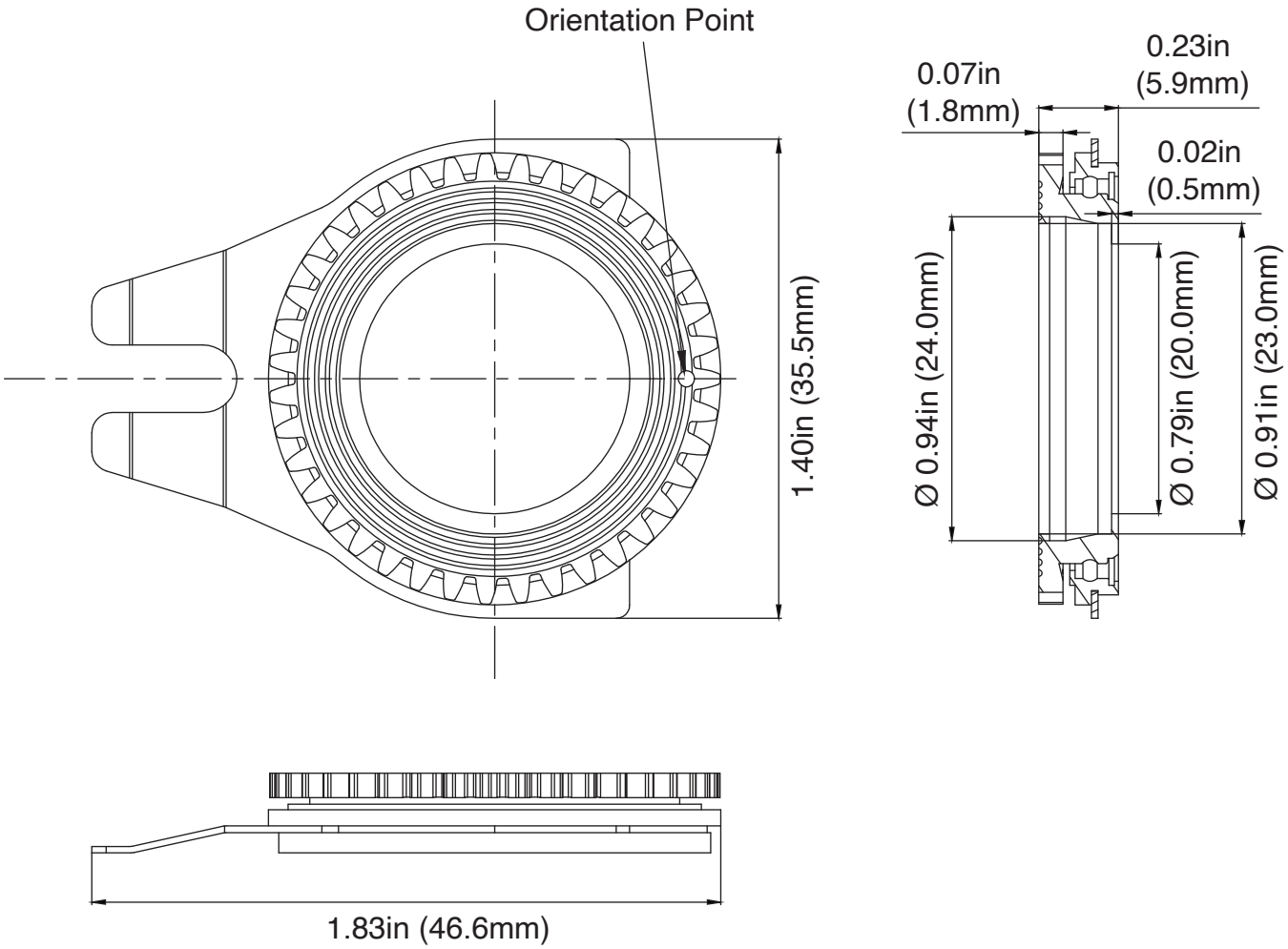

GOBOS

REPLACEMENT PROCEDURE

1. Place the device on a flat, stable surface, and allow the device to cool down for at least 1 hour before beginning this procedure.

2. Engage both the pan and tilt locks, and remove the head covers.

3. Locate the gobo module, which is the second module from the bottom, as shown in the illustration below. Disconnect any electrical connectors linking the module to the fixture head, and remove the screws holding the module in place. Slide the module out of the head.

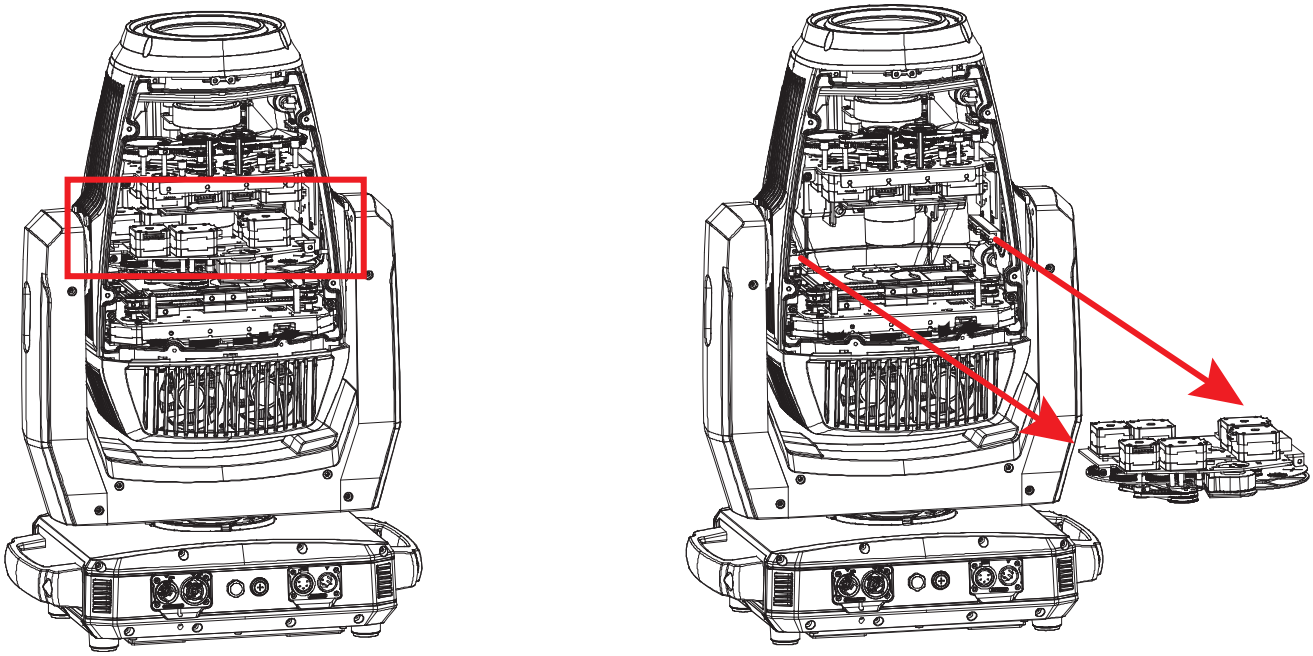

4. Pull the gobo holder away from the gobo wheel, then gently slide it outwards. Use a pair of needle nose pliers to carefully remove the retainer spring from the gobo holder. The gobo can now be removed from the gobo holder, and replaced with a new gobo. Reassemble by reversing these steps.

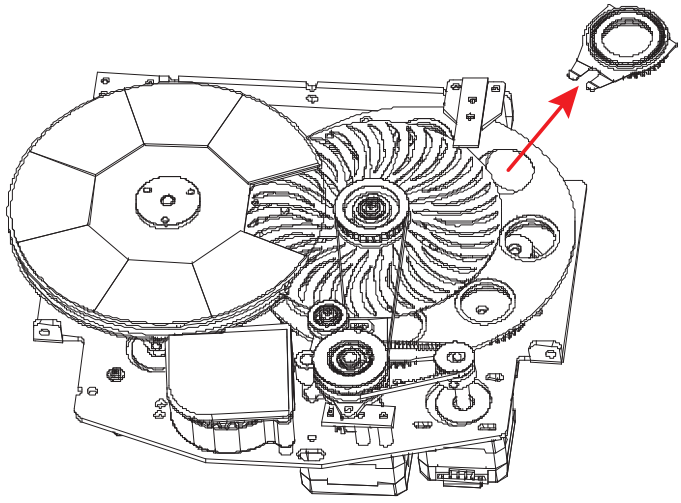

CONTROL PANEL

The Hydro Spot 2 features a display screen with a 6-button control pad, which can be used to easily adjust any device settings.

- The MODE button cycles through main menu options, or returns to the previous menu without making changes.
- The ENTER button is used to select the highlighted option, or to confirm a selection.
- The UP, DOWN, LEFT, and RIGHT buttons are used to navigate and adjust menu options and settings displayed on the screen.

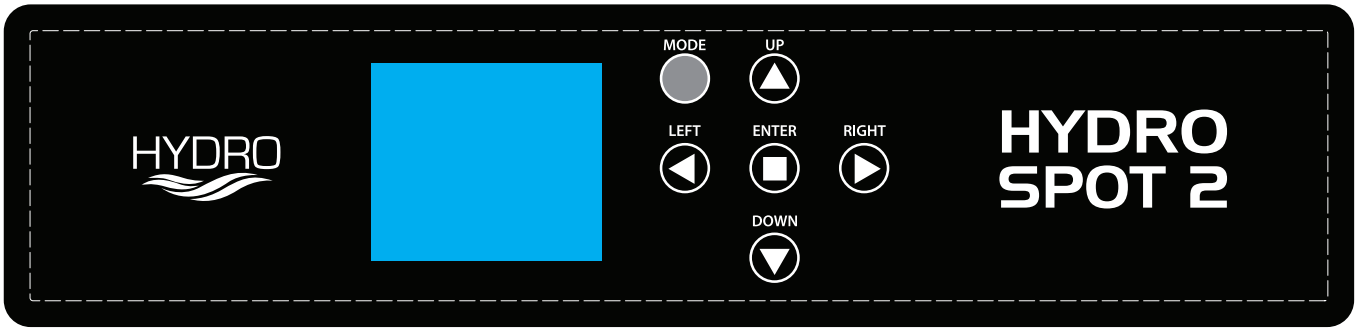

KEY LOCK

This function allows the user to configure whether or not the display screen and control panel keys will lock after a certain period of inactivity. It can be accessed by navigating to *Personality > Display > Key Lock* in the system menu. The setting options are described below:

- ***OFF:*** The display screen and control panel keys remain active at all times.
- ***ON:*** The display screen and control panel keys automatically lock after a certain period of inactivity, which can be set under *Personality > Display > Screen Saver Delay*. To unlock, press and hold the MODE button for 10 seconds.
- ***ON1:*** The display screen and control panel keys automatically lock after a certain period of inactivity, which can be set under *Personality > Display > Screen Saver Delay*. To unlock, press UP, DOWN, UP, DOWN, ENTER in that order.

SYSTEM MENU

DMX SETTINGS	DMX Address	***001*** - xxx		
	DMX Channel Mode	Basic 24		
		Standard 29		
		Extended 36		
	No DMX Status	***Hold Last***		Holds last settings when DMX signal is lost
		Blackout		Takes all channels to 0 when DMX signal is lost
		Manual		Reverts to manual mode when DMX signal is lost
		Internal Programs		Reverts to selected internal program when DMX signal is lost
PERSONALITY	Prim/Sec Mode	Primary / ***Secondary***		
	Select Signal	DMX or Wifly		DMX has priority; green LED indicates Wifly connected, and red LED indicates Wifly not connected
		Wifly and DMX Out		DMX XLR output sends DMX signal out
	Wifly Settings	Wifly Enable	***On*** / Off	
		Set Wifly Channel	00 - 14	
	Status Settings	Pan Degree	***540*** / 630	
		Pan Invert	On / ***Off***	
		Tilt Invert	On / ***Off***	
		P/T Feedback	***On*** / Off	Pan/Tilt Feedback
		P/T Speed	***Speed 1***	Pan/Tilt Speed
			Speed 2	
		Hibernation	Off, 01min - 99 min	Default = ***15min***
	Fan Settings	Head Fan	***Auto***	
			High	
			Low	
		Base Fan	***Auto***	
			High	
			Low	
	Zoom Speed	Standard		
		Fast		

CONTINUED ON NEXT PAGE

SYSTEM MENU

PERSONALITY (continued)	Dim Modes	***Standard***			
		Stage			
		TV			
		Architectural			
		Theatre			
		Stage 2			
		Dim Speed	0.1s - 10.0s		
	LED Refresh Rate	900 Hz-1500 Hz, 2500 Hz, 4000 Hz, 5000 Hz, 6000 Hz, 10 KHz, 15 KHz, 20 KHz, 25 KHz			Default = ***1200 Hz***
	Dim Curve	***Square***			
		Linear			
		Inv Squa			
		S Curve			
	Reset Motors	Reset All Motors	Yes / ***No***		
		Pan/Tilt Reset	Yes / ***No***		
		...	...		
		Effect Reset	Yes / ***No***		
	Display	Intensity	1 - ***10***		
		Display Invert	Yes / ***No***		
		Screen Saver Delay	Off - 10 min		Default = ***05 min***
		Key Lock	Off		Keys do not lock
			On		Press and hold MODE button for 10 sec to unlock keys
			On1		Press Up, Down, Up, Down, Enter to unlock keys
	Service	Passcode = 050	Effect Adjust (Calibration)	Pan 000 - 255	
				Tilt 000 - 255	
				Cyan 000 - 255	
				Magenta 000 - 255	
				Yellow 000 - 255	
				CTO 000 - 255	
				...	
			USB Port Power	Off / On	
			Update Software	Off / On	
			Factory Restore Passcode = 011	Off / On	

CONTINUED ON NEXT PAGE

SYSTEM MENU

MANUAL CONTROL	Pan	000 - 255			
	Pan Fine	000 - 255			
	Tilt	000 - 255			
	Tilt Fine	000 - 255			
	...	...			
INTERNAL PROGRAMS	Program 1	Speed	000 - 255		
		Fade	000 - 255		
	Program 2	Speed	000 - 255		
		Fade	000 - 255		
	...	...	...		
	Program 7	Speed	000 - 255		
		Fade	000 - 255		
INFORMATION	Fixture Life Time	Power On Time	xxxxxx Hours		Total lifetime hours that fixture has been powered on, cannot be reset
		P-On Time-R	xxxxxx Hours		Hours powered on since last reset
		P-On Time-Reset	Passcode = 050		Reset hours powered on
	Total LED Time	LED On Time	xxxxxx Hours		Total lifetime hours that LED has been run, cannot be reset
		LED On Time-R	xxxxxx Hours		Hours LED has been run since last reset
		LED Hours Reset	Passcode = 050		Reset LED run hours
	Fixture Temps	LEDs	Current	xxx F / xxx C	Displays current LED temp
			Max Resettable	xxx F / xxx C	Max recorded LED temp since last reset
		Base Temp	Current	xxx F / xxx C	Displays current base temp
			Max Resettable	xxx F / xxx C	Max recorded base temp since last reset
		Reset LED Temp	Yes / ***No***	Passcode = 050	
		Reset Base Temp	Yes / ***No***	Passcode = 050	
	Fixture Humidity	Head	xxx %		
		Base	xxx %		
	Fan Info (RPM)	LED Fan	xxxx RPM LED		
		Base Fan	xxxx RPM		

CONTINUED ON NEXT PAGE

SYSTEM MENU

INFORMATION	DMX Values	Pan			
		Pan Fine			
		...			
	Error Logs	xxxxx			List errors one by one
		Reset Error Log	Yes / ***No***	Passcode = 050	
	Software Version	U:xxx			

DMX SET UP

DMX-512: DMX is short for Digital Multiplex. This is a universal protocol used as a form of communication between intelligent fixtures and controllers. A DMX controller sends DMX data instructions from the controller to the fixture. DMX data is sent as serial data that travels from fixture to fixture via the DATA “IN” and DATA “OUT” XLR terminals located on all DMX fixtures (most controllers only have a DATA “OUT” terminal).

DMX Linking: DMX is a language allowing all makes and models of different manufacturers to be linked together and operate from a single controller, as long as all fixtures and the controller are DMX compliant. To ensure proper DMX data transmission, try to use the shortest cable path possible when linking several DMX fixtures. The order in which fixtures are connected in a DMX line does not influence the DMX addressing. For example, a fixture assigned a DMX address of 1 may be placed anywhere in a DMX line: at the beginning, at the end, or anywhere in the middle. When a fixture is assigned a DMX address of 1, the DMX controller knows to send DATA assigned to address 1 to that unit, no matter where it is located in the DMX chain.

Data Cable (DMX Cable) Requirements (For DMX Operation): This unit can be controlled via DMX-512 protocol. The DMX address is set on the rear panel of the unit. Your unit and your DMX controller require a standard 5-pin XLR connector for data input and data output. We recommend Accu-Cable DMX cables. If you are making your own cables, be sure to use standard 110-120 Ohm shielded cable (This cable may be purchased at almost all pro lighting stores). Your cables should be made with a male XLR connector at one end and a female XLR connector at the other. Also remember that DMX cable must be daisy chained and cannot be split.

Notice: Be sure to follow the diagram below when making your own cables. Do not use the ground lug on the XLR connector. Do not connect the cable’s shield conductor to the ground lug or allow the shield conductor to come into contact with the XLR’s outer casing. Grounding the shield could cause a short circuit and erratic behavior.

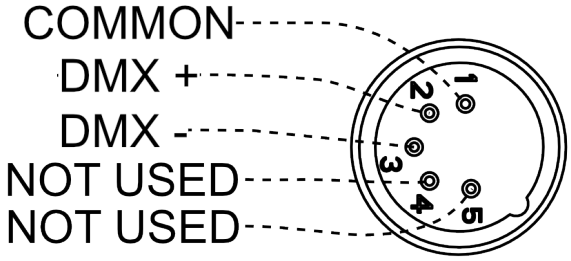

Special Note: Line Termination. When longer runs of cable are used, you may need to use a terminator on the last unit to avoid erratic behavior. A terminator is a 110-120 ohm 1/4 watt resistor which is connected between pins 2 and 3 of a male XLR connector (DATA + and DATA -). This unit is inserted in the female XLR connector of the last unit in your daisy chain to terminate the line. Using a cable terminator (ADJ part number Z-DMX/T) will reduce the risk of erratic behavior.

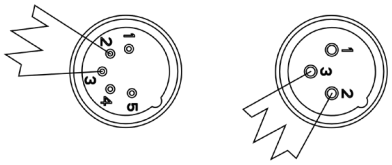

A DMX512 terminator reduces signal errors, avoiding most signal reflection interference. Connect PIN 2 (DMX-) and PIN 3 (DMX+) of the last fixture in series with a 120 Ohm, 1/4 W Resistor to terminate the DMX512.

DMX SET UP

DMX ADDRESSING.

All fixtures should be given a DMX starting address when using a DMX controller, so the correct fixture responds to the correct control signal. This digital starting address is the channel number from which the fixture starts to “listen” to the digital control signal sent out from the DMX controller. The assignment of this starting DMX address is achieved by setting the correct DMX address on the digital control display on the fixture.

You can set the same starting address for all fixtures or a group of fixtures, or set different addresses for each individual fixture. Setting all fixtures to the same DMX address will cause all fixtures to react in the same way. In other words, changing the settings of one channel will affect all the fixtures simultaneously.

If you set each fixture to a different DMX address, each unit will start to “listen” to the channel number you have set, based on the quantity of DMX channels of each fixture. That means changing the settings of one channel will only affect the selected fixture.

For example, when this unit is operating in 24 channel mode, you should set the starting DMX address of the first unit to 1, the second unit to 25 (1 + 24), the third unit to 49 (1 + 24 + 24), and so on. See the chart below for more details.

CHANNEL MODE	UNIT 1 ADDRESS	UNIT 2 ADDRESS	UNIT 3 ADDRESS	UNIT 4 ADDRESS
24 Ch	1	25	49	73
29 Ch	1	30	59	88
36 Ch	1	37	73	109

DMX TRAITS

CHANNEL			DMX VALUES	FUNCTION
24 CH	29 CH	36 CH		
1	1	1	000 - 255	***Pan Movement,*** 540/630
	2	2	000 - 255	***Pan Fine***
2	3	3	000 - 255	***Tilt Movement,*** 270
	4	4	000 - 255	***Tilt Fine***
3	5	5	000 - 255	***Cyan,*** 0% to 100%
		6	000 - 255	***Cyan Fine***
4	6	7	000 - 255	***Magenta,*** 0% to 100%
		8	000 - 255	***Magenta Fine***
5	7	9	000 - 255	***Yellow,*** 0% to 100%
		10	000 - 255	***Yellow Fine***
6	8	11	000 - 255	***CTO,*** 0% to 100%
		12	000 - 255	***CTO Fine***
7	9	13		***White Color Temperature Presets***
			000 - 023	Open
			024 - 063	Presets, see ***White Color Temperature Presets*** section of this manual
			064 - 255	6700K
8	10	14		***Color Wheel***
			000 - 004	Open
			005 - 017	Open / Red
			018 - 030	Red
			031 - 043	Red / Medium Blue
			044 - 056	Medium Blue
			057 - 069	Medium Blue / Green
			070 - 082	Green
			083 - 095	Green / Amber
			096 - 108	Amber
			109 - 121	Amber / Orange
			122 - 134	Orange
			135 - 147	Orange / High CRI Filter
			148 - 160	High CRI Filter
			161 - 173	High CRI Filter / CTB
			174 - 186	CTB
			187 - 199	CTB / Open
			200 - 226	Clockwise Color Wheel Rotation, fast to slow
			227 - 228	No Rotation
			229 - 255	Counter-Clockwise Color Wheel Rotation, slow to fast

CONTINUED ON NEXT PAGE

DMX TRAITS

CHANNEL			DMX VALUES	FUNCTION
24 CH	29 CH	36 CH		
				Color Macros
			000 - 031	Off
			032 - 039	Macro 1
			040 - 047	Macro 2
			048 - 055	Macro 3
			056 - 063	Macro 4
			064 - 071	Macro 5
			072 - 079	Macro 6
			080 - 087	Macro 7
			088 - 095	Macro 8
			096 - 103	Macro 9
			104 - 111	Macro 10
			112 - 119	Macro 11
			120 - 127	Macro 12
			128 - 135	Macro 13
	11	15	136 - 143	Macro 14
			144 - 151	Macro 15
			152 - 159	Macro 16
			160 - 167	Macro 17
			168 - 175	Macro 18
			176 - 183	Macro 19
			184 - 191	Macro 20
			192 - 199	Macro 21
			200 - 207	Macro 22
			208 - 215	Macro 23
			216 - 223	Macro 24
			224 - 231	Macro 25
			232 - 239	Macro 26
			240 - 247	Macro 27
			248 - 255	Random CMY
				Gobo Wheel 1
			000 - 009	Open
			010 - 019	Gobo 1
			020 - 029	Gobo 2
9	12	16	030 - 039	Gobo 3
			040 - 049	Gobo 4
			050 - 059	Gobo 5
			060 - 069	Gobo 6
			070 - 079	Gobo 7

CONTINUED ON NEXT PAGE

DMX TRAITS

CHANNEL			DMX VALUES	FUNCTION
24 CH	29 CH	36 CH		
9	12	16		***Gobo Wheel 1 (continued)***
			080 - 094	Gobo 1 Shake, slow to fast
			095 - 109	Gobo 2 Shake, slow to fast
			110 - 124	Gobo 3 Shake, slow to fast
			125 - 139	Gobo 4 Shake, slow to fast
			140 - 154	Gobo 5 Shake, slow to fast
			155 - 169	Gobo 6 Shake, slow to fast
			170 - 189	Gobo 7 Shake, slow to fast
			190 - 221	Clockwise Gobo Wheel Rotation, fast to slow
			222 - 223	No Rotation
			224 - 255	Counter-Clockwise Gobo Wheel Rotation, slow to fast
10	13	17		***Gobo 1 Rotation***
			000 - 005	Gobo 1 Rotation Off
			006 - 128	Gobo Index, 0°... 540°
			129 - 191	Clockwise Gobo Rotation, fast to slow
			192	No Rotation
			193 - 255	Counter-Clockwise Gobo Rotation, slow to fast
		18	000 - 255	***Gobo 1 Rotation Fine***
11	14	19		***Gobo Wheel 2***
			000 - 005	Open
			006 - 014	Gobo 1
			015 - 023	Gobo 2
			024 - 032	Gobo 3
			033 - 041	Gobo 4
			042 - 050	Gobo 5
			051 - 059	Gobo 6
			060 - 068	Gobo 7
			069 - 077	Gobo 8
			078 - 091	Gobo 1 Shake, slow to fast
			092 - 105	Gobo 2 Shake, slow to fast
			106 - 119	Gobo 3 Shake, slow to fast
			120 - 133	Gobo 4 Shake, slow to fast
			134 - 147	Gobo 5 Shake, slow to fast
			148 - 161	Gobo 6 Shake, slow to fast
			162 - 175	Gobo 7 Shake, slow to fast
			176 - 189	Gobo 8 Shake, slow to fast
			190 - 221	Clockwise Gobo Wheel Rotation, fast to slow
			222 - 223	No Rotation
			224 - 255	Counter-Clockwise Gobo Wheel Rotation, slow to fast

CONTINUED ON NEXT PAGE

DMX TRAITS

CHANNEL			DMX VALUES	FUNCTION
24 CH	29 CH	36 CH		
				Shutter
			000 - 031	Shutter Closed
			032 - 063	Shutter Open
			064 - 095	Strobe, slow to fast
12	15	20	096 - 127	Shutter Open
			128 - 159	Pulse Effect, slow to fast
			160 - 191	Shutter Open
			192 - 223	Random Strobe, slow to fast
			224 - 255	Shutter Open
13	16	21	000 - 255	***Dimmer Intensity,*** 0% to 100%
	17	22	000 - 255	***Dimmer Intensity Fine***
				Prisms and Prism/Gobo Macros
			000 - 005	No Prism - Open
			006 - 066	Prism 1 (6 Linear Prism)
			067 - 127	Prism 2 (4 Facet Prism)
			128 - 135	Macro 1
			136 - 143	Macro 2
			144 - 151	Macro 3
			152 - 159	Macro 4
			160 - 167	Macro 5
			168 - 175	Macro 6
14	18	23	176 - 183	Macro 7
			184 - 191	Macro 8
			192 - 199	Macro 9
			200 - 207	Macro 10
			208 - 215	Macro 11
			216 - 223	Macro 12
			224 - 231	Macro 13
			232 - 239	Macro 14
			240 - 247	Macro 15
			248 - 255	Macro 16
				Prism Rotation
			000 - 005	Prism Rotation Off
			006 - 128	Prism Indexing, 0°... 540°
15	19	24	129 - 191	Clockwise Prism Rotation, fast to slow
			192	No Rotation
			193 - 255	Counter-Clockwise Prism Rotation, slow to fast
16	20	25	000 - 255	***Focus,*** 0% to 100%
		26	000 - 255	***Focus Fine***
CONTINUED ON NEXT PAGE				

DMX TRAITS

CHANNEL			DMX VALUES	FUNCTION
24 CH	29 CH	36 CH		
17	21	27	000 - 255	***Zoom,*** narrow to wide
		28	000 - 255	***Zoom Fine***
18	22	29	000 - 255	***Medium Frost,*** 0% to 100%
19	23	30	000 - 255	***Heavy Frost,*** 0% to 100%
20	24	31		***Animation***
			000 - 005	Wheel Rotation Off
			006 - 128	Animation Index, 0°... 540°
			129 - 191	Clockwise Animation Rotation, fast to slow
			192	No Rotation
			193 - 255	Counter-Clockwise Animation Rotation, slow to fast
21	25	32		***Dimmer Mode***
			000 - 020	Default to Unit Setting
			021 - 040	Standard
			041 - 060	Stage
			061 - 080	TV
			081 - 100	Architectural
			101 - 120	Theater
			121 - 140	Stage 2
			141 - 160	Dim Speed, fast to slow (0.1s to 10.0s)
			161 - 255	Default to Unit Setting
	26	33		***Dim Curves***
			000 - 020	Square
			021 - 040	Linear
			041 - 060	Inv Squa
			061 - 080	S Curve
			081 - 255	No Function
22	27	34	000 - 255	***CMY & Color Macro Speed,*** maximum to minimum
23	28	35		***Pan/Tilt Speed***
			000 - 225	Pan/Tilt, fast to slow
			226 - 235	Blackout by Movement
			236 - 245	Blackout by All Wheel Changing
			246 - 255	No Function
24	29	36		***Special Functions***
			000 - 039	No Function (1200 Hz Default LED Refresh Rate)
			040 - 049	Fan Control - Low (hold 3s)
			050 - 059	Fan Control - High (hold 3s)
			060 - 069	Fan Control - Auto (default, hold 3s)
			070 - 074	All Motor Reset (hold 3s)
			075 - 079	Pan/Tilt Reset (hold 3s)

CONTINUED ON NEXT PAGE

DMX TRAITS

CHANNEL			DMX VALUES	FUNCTION
24 CH	29 CH	36 CH		
24	29	36		***Special Functions (continued)***
			080 - 084	Color Reset (hold 3s)
			085 - 089	Gobo Reset (hold 3s)
			090 - 094	Focus and Zoom Reset (hold 3s)
			095 - 099	Shutter Reset (hold 3s)
			100 - 104	No Function
			105 - 109	Other Motors Reset (hold 3s)
			110 - 114	Enable Zoom Speed Fast (hold 3s)
			115 - 119	Disable Zoom Speed Fast (hold 5s)
			120 - 148	No Function
			149 - 150	Wifly On (default, hold 3s)
			151 - 152	Wifly Off (hold 5s)
			153 - 154	Hibernation Enable (hold 3s)
			155 - 156	Hibernation Off (hold 5s)
			157 - 158	Display Backlight On (hold 3s)
			159 - 160	Display Backlight Off (hold 5s)
			161 - 162	Pan/Tilt Speed 1 (default, hold 5s)
			163 - 164	Pan/Tilt Speed 2 (hold 5s)
			165 - 166	Invert Pan On (hold 3s)
			167 - 168	Invert Pan Off (hold 5s)
			169 - 170	Invert Tilt On (hold 3s)
			171 - 172	Invert Tilt Off (hold 5s)
				Refresh Rates (Hz)
			173	900
			174	910
			175	920
			176	930
			177	940
			178	950
			179	960
			180	970
			181	980
			182	990
			183	1000
			184	1010
			185	1020
			186	1030
			187	1040
			188	1050

CONTINUED ON NEXT PAGE

DMX TRAITS

CHANNEL			DMX VALUES	FUNCTION
24 CH	29 CH	36 CH		
				Refresh Rates (Hz, continued)
			189	1060
			190	1070
			191	1080
			192	1090
			193	1100
			194	1110
			195	1120
			196	1130
			197	1140
			198	1150
			199	1160
			200	1170
			201	1180
			202	1190
			203	1210
			204	1220
			205	1230
			206	1240
24	29	36	207	1250
			208	1260
			209	1270
			210	1280
			211	1290
			212	1300
			213	1310
			214	1320
			215	1330
			216	1340
			217	1350
			218	1360
			219	1370
			220	1380
			221	1390
			222	1400
			223	1410
			224	1420
			225	1430
			226	1440

CONTINUED ON NEXT PAGE

DMX TRAITS

CHANNEL			DMX VALUES	FUNCTION
24 CH	29 CH	36 CH		
				Refresh Rates (Hz, continued)
			227	1450
			228	1460
			229	1470
			230	1480
			231	1490
			232	1500
			233	2500
			234	4000
			235	5000
			236	6000
24	29	36	237	10,000
			238	15,000
			239	20,000
			240	25,000
			241	Internal Program 1 (scenes 1-8, hold 3s)
			242	Internal Program 2 (scenes 9-16, hold 3s)
			243	Internal Program 3 (scenes 17-24, hold 3s)
			244	Internal Program 4 (scenes 25-32, hold 3s)
			245	Internal Program 5 (scenes 33-40, hold 3s)
			246	Internal Program 6 (scenes 41-48, hold 3s)
			247	Internal Program 7 (scenes 49-56, hold 3s)
			248 - 255	No Function

WHITE COLOR TEMPERATURE PRESETS

DMX VALUES	COLOR TEMPERATURE (K)
024	2700
025	2800
026	2900
027	3000
028	3100
029	3200
030	3300
031	3400
032	3500
033	3600
034	3700
035	3800
036	3900
037	4000
038	4100
039	4200
040	4300
041	4400
042	4500
043	4600

DMX VALUES	COLOR TEMPERATURE (K)
044	4700
045	4800
046	4900
047	5000
048	5100
049	5200
050	5300
051	5400
052	5500
053	5600
054	5700
055	5800
056	5900
057	6000
058	6100
059	6200
060	6300
061	6400
062	6500
063	6600

DIM SPEEDS

DMX VALUES	DELAY TIME
141	0.1 sec
142	0.2 sec
143	0.3 sec
144	0.4 sec
145	0.5 sec
146	0.6 sec
147	0.7 sec
148	0.8 sec
149	0.9 sec
150	1.0 sec
151	1.5 sec
152	2.0 sec
153	3.0 sec
154	4.0 sec
155	5.0 sec
156	6.0 sec
157	7.0 sec
158	8.0 sec
159	9.0 sec
160	10.0 sec

DIM MODES

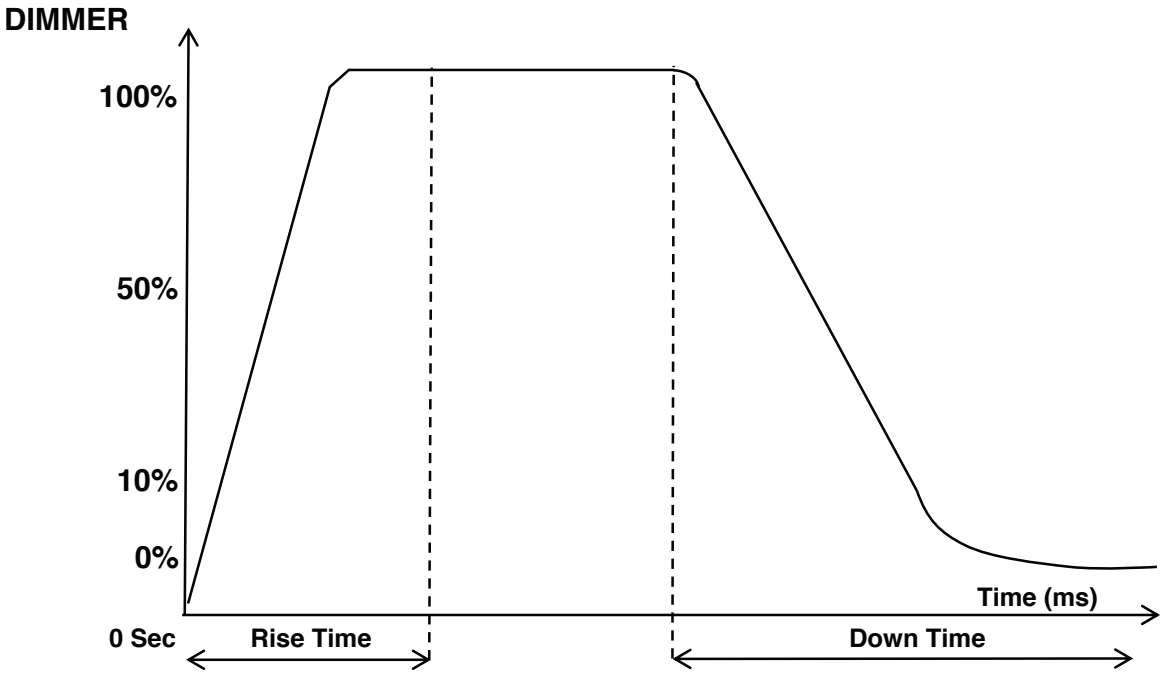

Dimming Curve Ramp Effect	0 sec Fade Time (255 / 0)		1 sec Fade Time (255 / 0)	
	Rise Time (ms)	Down Time (ms)	Rise Time (ms)	Down Time (ms)
Standard (default)	0	0	0	0
Stage	780	1100	1540	1660
TV	1180	1520	1860	1940
Architectural	1380	1730	2040	2120
Theatre	1580	1940	2230	2280
Stage 2	0	1100	0	1660

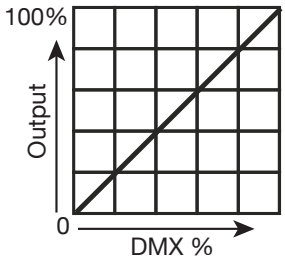

LINEAR

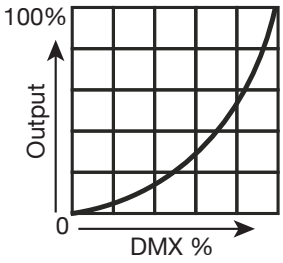

SQUARE

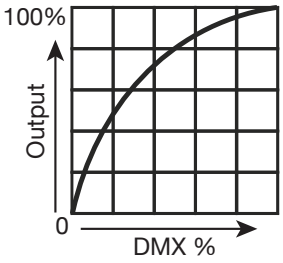

INVERSE SQUARE

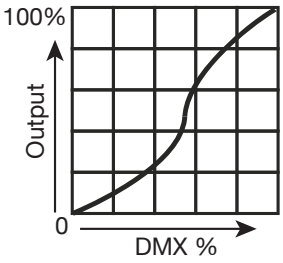

S-CURVE

PRIMARY-SECONDARY SET UP

This function allows you to link units together to run in a Primary-Secondary set-up, in which one unit will act as the controlling unit and the others will react to the controlling unit's built-in programs. Any unit can be configured to act as a Primary or as a Secondary, but only one unit in a given system can be programmed to act as the Primary.

Primary-Secondary Connections and Settings:

1. Daisy chain your units via the XLR connectors on the rear panels of each unit. Use standard XLR data cables to link your units together. Remember that the male XLR connector is the input and the female XLR connector is the ouput. The first unit in the chain (primary) will use the female XLR connector only, while the last unit in the chain will use the male XLR connector only.
2. Use the display screen and control panel to navigate to Personality > Prim/Sec Mode. Select this sub-menu using the ENTER button, and use the arrows to toggle between "Primary" and "Secondary". Press ENTER to confirm your selection.
3. Repeat Step 2 for each unit in the system. Make sure that only one unit is designated as the Primary, while all other units are designated as Secondaries.
4. The secondary units will now follow the behavior of the primary unit.

MULTI UNIT POWER LINKING

This features allows you to connect the fixtures to one another using the power cable input and output sockets.

The maximum number of units that can be linked in this manner is as follows:

- **3 units when running on 240V power.**
- **NO POWER LINKING ALLOWED ON 110V POWER! Each unit must be connected to power individually.**

DO NOT EXCEED THIS MAXIMUM NUMBER WHEN POWER LINKING UNITS!

All linked units must be of the same make and model type. Do not mix and match units!

MAINTENANCE GUIDELINES



DISCONNECT POWER BEFORE PERFORMING ANY MAINTENANCE!

CLEANING

Frequent cleaning is recommended to ensure proper function, optimized light output, and an extended life. The frequency of cleaning depends on the environment in which the fixture operates: damp, smoky, or particularly dirty environments can cause greater accumulation of dirt on the fixture's optics. Clean the external lens surface regularly with a soft cloth to avoid dirt/debris accumulation.

NEVER use alcohol, solvents, or ammonia-based cleaners.

MAINTENANCE

Regular inspections are recommended to ensure proper function and extended life. There are no user serviceable parts inside this fixture. Please refer all other service issues to an authorized ADJ service technician. Should you need any spare parts, please order genuine parts from your local ADJ dealer.

Please refer to the following points during routine inspections:

A. A detailed electrical check by an approved electrical engineer every three months, to make sure the circuit contacts are in good condition and prevent overheating.
B. Be sure all screws and fasteners are securely tightened at all times. Loose screws may fall out during normal operation, resulting in damage or injury as larger parts could fall.
C. Check for any deformations on the housing, color lenses, rigging hardware, and rigging points (ceiling, suspension, trussing). Deformations in the housing could allow for dust to enter into the fixture. Damaged rigging points or unsecured rigging could cause the fixture to fall and seriously injure a person(s).
D. Electric power supply cables must not show any damage, material fatigue, or sediments.

NEVER remove the ground prong from the power cable.

SOFTWARE UPDATES

For software updates, please contact ADJ service to obtain a software uploader and detailed instructions. Refer to the ***Introduction*** section of this manual for contact information.

FIXTURE DISASSEMBLY

The following points should be observed after performing any maintenance procedure that requires disassembly of the unit:

- After the unit has been reassembled, open the valve, and allow the light to run for approximately 2 hours in order to dry out any moisture that has been trapped inside the fixture. The process should continue until indicated humidity drops below 15% for the head and 30% for the base.
- Once this has been achieved, the light can be switched off, but the unit should remain connected to power so that the cooling fan can cool down the unit. Please note that allowing cool down time should ALWAYS be done after lamp operation.
- Some units may require partial disassembly in order to gain access to the valve. Please contact ADJ service for information regarding the location and access procedure for the valve on your specific unit model.

TORQUE SETTINGS FOR SCREWS

ALL SCREWS MUST BE TIGHTENED WITH A TORQUE DRIVER. All screws are Allen head screws. Please refer to the table and diagram below for screw locations, quantity, and torque settings.

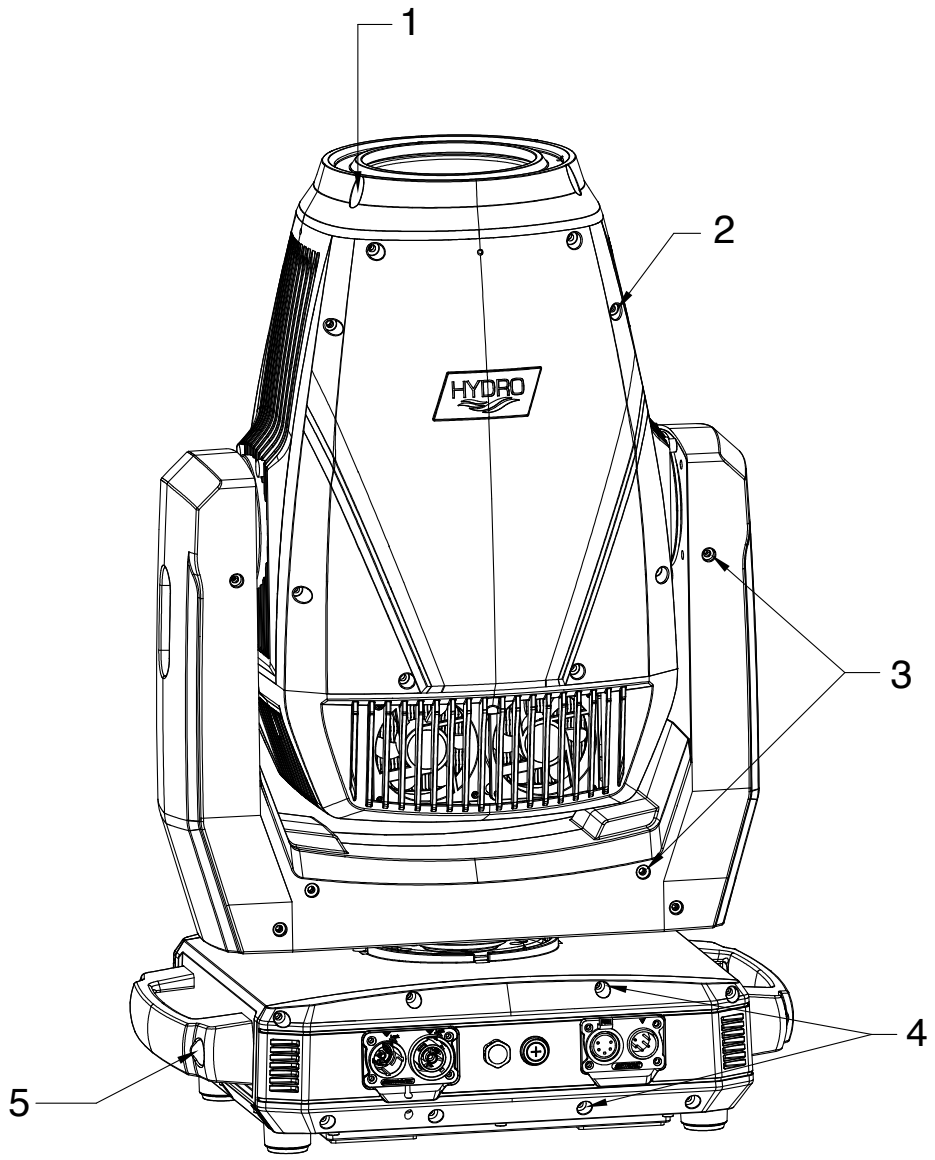

Zone No.	Description	Quantity	Torque Spec
1	Lens Frame	4	6.9 ± 0.6 in-lb (8.0 ± 0.7 Kg-cm)
2	Main Head Cover	8 per side (16 total)	6.9 ± 0.6 in-lb (8.0 ± 0.7 Kg-cm)
3	Arm Cover	6 per side (12 total)	4.3 ± 0.4 in-lb (5.0 ± 0.5 Kg-cm)
4	Base Side Cover	8 per side (16 total)	6.9 ± 0.6 in-lb (8.0 ± 0.7 Kg-cm)
5	Carry Handle	2 per handle (4 total)	6.9 ± 0.6 in-lb (8.0 ± 0.7 Kg-cm)

TORQUE SETTINGS FOR SCREWS

TORQUE DRIVERS (Recommended): UTICA TS-30 (Shown)

TORQUE DRIVER (Alternate):

- **Proto J6107A**
- **Wiha 28887**



CAUTION! DO NOT OVER TORQUE SCREWS AS THIS CAN CAUSE LEAKAGE ISSUES! TO CONFIRM THE IP65 INTEGRITY AFTER A LAMP REPLACEMENT, TEST THE FIXTURE USING THE IP TESTER. CONTACT ADJ SERVICE FOR MORE DETAILS.

CAUTION! THE USE OF PROTECTIVE GLOVES AND SAFETY GOGGLES IS STRONGLY RECOMMENDED WHILE PERFORMING THE IP PRESSURE TEST! AVOID PLACING YOUR FACE, EYES, HANDS, ETC IN CLOSE PROXIMITY TO THE FIXTURE'S LENS WHILE PERFORMING THE TEST!



IP PRESSURE TESTING PARAMETERS		
Low Pressure Limit	**High Pressure Limit**	**Steady/Hold Time**
2.9 psi (20 KPa)	3.3 psi (23 Kpa)	15 sec

ERROR CODES

When power is applied, the unit will automatically enter a ***"Reset/Test"*** mode. This mode brings all the internal motors to a home position. If there is an internal problem with one or more of the motors, an error code will flash in the display, as described in the chart below. For example, when the display shows "Pan" it means there is some type of error with the Pan motor. If there are multiple errors during the start-up process, they will all flash in the display. For example: if the fixtures have errors on Pan, Tilt, and Cyan all at the same time, you will see the error message "Pan", "Tilt", and "Cyan" flash in sequence. The error sequence will repeat 5 times.

If an error does occur during the initial start-up procedure, the fixture will self-generate a second reset signal and try to realign all the motors and correct the errors. If the error persists after a second attempt, a third attempt will be made. If after a third attempt all the errors have not been corrected, the fixture will make the following determinations:

- **3 or More Errors:** The fixture cannot function properly with three or more errors. Therefore the fixture will place itself in a stand-by mode until subsequent repairs can be made.
- **Less Than 3 Errors:** The fixture has less than 3 errors. Therefore, most other functions will work properly. The fixture will attempt to operate normally until the errors can be correct by a technician. The errors in question will remain flashing in the display as a reminder of internal errors.

Error Code	Description
Pan	Pan Error
Tilt	Tilt Error
Cyan	Cyan Error
Magenta	Magenta Error
Yellow	Yellow Error
CTO	CTO Error
Color Wheel	Color Wheel Error
Gobo	Gobo Error
Rot Gobo	Rotating Gobo Error
Fixed Gobo	Fixed Gobo Error
Focus	Focus Error
Zoom	Zoom Error
Prism 1	Prism 1 Error
Prism 1 Rot	Prism 1 Rotation Error
Prism 2	Prism 2 Error
Prism 2 Rot	Prism 2 Rotation Error
Animation	Animation Error
LED Fan	LED Fan Error
Base Fan	Base Fan Error
Gobo Fan	Gobo Fan Error
LED Temp	LED Temperature Error
Base Temp	Base Temperature Error

DIMENSIONAL DRAWINGS

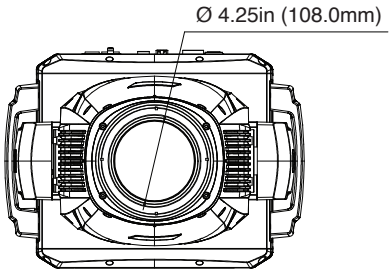

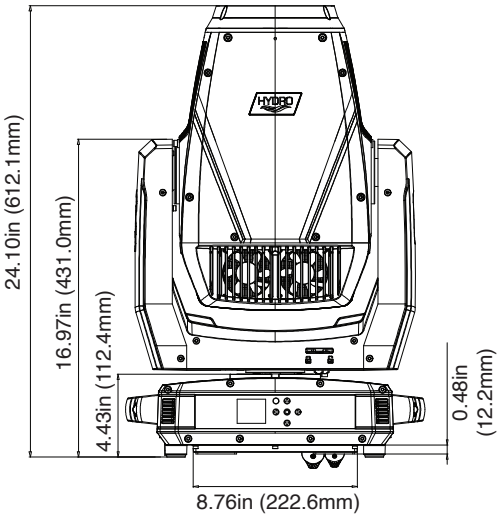

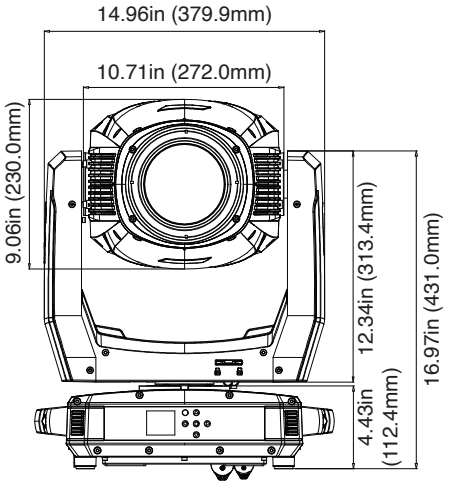

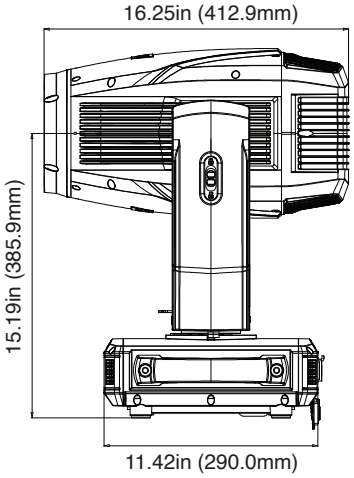

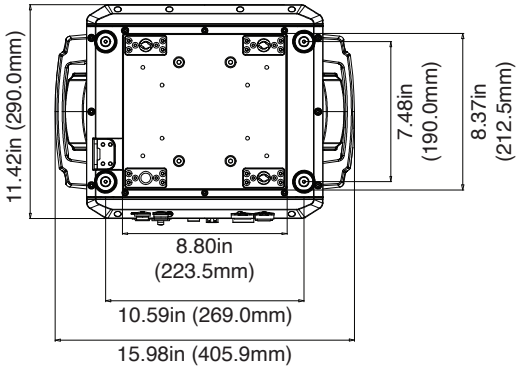

Drawings are not to scale.

SPECIFICATIONS

Light Source:
- 320W Cool White LED Engine (50,000 hr.)
- 15,000 Lumens

Features:
- Motorized Focus
- 2 Frost Filters
- Motorized Zoom: 8° ~ 41°
- Animation Wheel
- 2 Prism FX: Rotating 5-facet Linear & rotating 6-facet Circular
- 0-100% smooth dimming
- Various strobe speeds
- 2 cooling fans

Color:
- CMY color mixing system
- Variable CTO flag
- Color wheel with 7 dichroic colors + white (includes CTB and High CRI filters

Gobo Wheels:
- (1) Rotating Gobo wheel with 7 Gobos
- (1) Static Gobo wheel with 8 Gobos
- All Gobo's on rotating wheel are replaceable
- Gobo Shake Effect on both wheels
- Aluminum Gobo size: 23mm (outer); 19mm (viewable); 0.5mm (thickness)
- Glass gobo size: 23mm (outer); 19mm (viewable); 3.3mm (thickness)

Prism Wheel:
- Prism Wheel 1: Rotatable 6-facet Circular
- Prism Wheel 2: Rotatable 5-facet Linear
- Both Prisms are indexable

Frost Filters:
- Frost 1: Heavy frost for wash effect
- Frost 2: Medium frost creates lightly blurred edges for Gobo and Prism FX

Control:
- 3 DMX Channel Modes: 23/27/34
- Color LCD display with 6-button function menu
- Control Mode: DMX512 or internal programs
- 6 Dim Modes: Standard, Stage, TV, Architectural, Theatre, Stage2
- 4 Dim Curves: Square, Linear, Inv. Square and S. Curve
- Selectable LED Refresh Rates (900 Hz~25K Hz)
- 0-100% smooth dimming
- Various strobe speeds
- RDM (Remote Device Management)
- With Wired Digital Communication Network

Pan/Tilt:
- Pan: 540/630 degrees
- Tilt: 270 degrees

Connections:
- DMX Connections: 5-pin XLR In/Out
- Power Connections: IP65 PowerLock In/Out to daisy chain power

Electrical:
- Multi-voltage operation: 90-240V, 50/60Hz
- Max power consumption: 400W

Dimensions & Weight:
- Dimensions (LxWxH): 11.42" x 16.70" x 23.51" (290x424x597mm)
- Weight: 57.2lbs (26kg)

Approvals / Rating:
- ETL Approved / CE Certified
- IP65 with Marine Coated Exterior and conformal coated p.c.b's



Intertek
4010765

Please Note: Specifications and improvements in the design of this unit and this manual are subject to change without any prior written notice.