FUJINON TV LENS
富士能电视镜头
UA125×8BESM-S35

取扱説明書 /Operation Manual/ 使用手册

富士フイルム株式会社
FUJIFILM Corporation
富士胶片株式会社

A
BB00049248-101
LP555A-S35 0202

ENGLISH VERSION

◆ This operation manual is composed of the Japanese version, English version, Chinese version, and Technical Drawings.

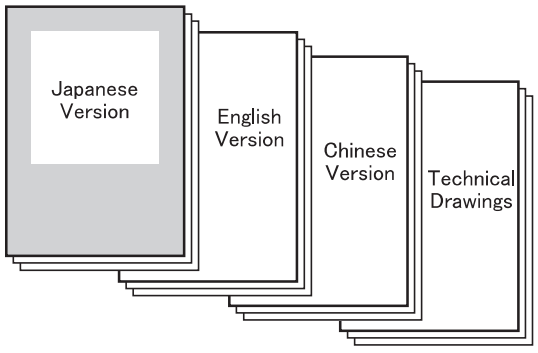

FCC REGULATIONS

This device complies with part 15 of the FCC Rules. Operation is subject to the following two conditions: (1) This device may not cause harmful interference, and (2) this device must accept any interference received, including interference that may cause undesired operation.

Note: This equipment has been tested and found to comply with the limits for a Class A digital device, pursuant to part 15 of the FCC Rules. These limits are designed to provide reasonable protection against harmful interference when the equipment is operated in a commercial environment. This equipment generates, uses, and can radiate radio frequency energy and, if not installed and used in accordance with the instruction manual, may cause harmful interference to radio communications. Operation of this equipment in a residential area is likely to cause harmful interference in which case the user will be required to correct the interference at his own expense.

CAUTION : Changes or modifications not expressly approved by the party responsible for compliance could void the user's authority to operate the equipment.

Canadian Radio Interference Regulation

CAN ICES-3(A) / NMB-3(A)
CAUTION : This Class A digital apparatus complies with Canadian ICES-003.

Disposal of Electrical and Electronic Equipment in Private

In the European Union, Norway, Iceland and Liechtenstein:
This symbol on the product, or in the manual, and/or on its packaging indicates that this product shall not be treated as household waste. Instead it should be taken to an applicable collection point for the recycling of electrical and electronic equipment.
By ensuring this product is disposed of correctly, you will help prevent potential negative consequences to the environment and human health, which could otherwise be caused by inappropriate waste handling of this product.



CONTENTS

FOR YOUR SAFETY USE ····· ii
PRIOR TO USE ····· iv
(1) Before Installing onto Camera ····· iv
(2) Caution when using the lens supporter ····· iv
(3) Enclosure of Desiccant ····· iv
(4) Setting of Camera Mode ····· v
1. GENERAL DESCRIPTION ····· 1
2. LIST OF COMPONENTS ····· 1
3. SPECIFICATIONS ····· 2
4. NAMES AND FUNCTIONS ····· 3
5. INSTALLATION ····· 5
6. SETTING AND ADJUSTMENT OF THE LENS ····· 6
6.1 Dip Switch Settings ····· 7
6.2 Settings and Operations Performed by LCD Panel ····· 7
7. ADJUSTMENT OF FLANGE FOCAL LENGTH ····· 8
8. OPERATING INSTRUCTION ····· 10
8.1 FOCUSING OPERATION ····· 10
8.2 ZOOMING OPERATION ····· 10
8.3 IRIS OPERATION ····· 10
8.4 EXTENDER SELECTION ····· 11
8.5 MACRO OPERATION ····· 11
9. ADJUSTMENT OF IRIS AMPLIFIER ····· 12
10. BREATHING COMPENSATION TECHNOROGY (BCT) ····· 12
11. OPTICAL STABILIZER FUNCTION ····· 12
12. MAINTENANCE ····· 13
13. SPECIFICATIONS OF ENCODER OUTPUT SIGNAL ····· 14
14. OPTIONAL ACCESSORY ····· 15
14.1Focus Servo / Zoom Servo System ····· 15
14.2Other Accessories ····· 16

TECHNICAL DRAWINGS

OUTLINE DRAWING
WIRING DIAGRAM
SETTING OF EACH BOARD

Note. For detailed descriptions on operation and functions of the LCD panel, refer to the detailed user manual.
The detailed user manual can be downloaded from our website.
URL https://www.fujifilm.com/support/optical_devices/tv_cine/manuals/

FOR YOUR SAFETY USE

This content explains important notices for all the users to use this product safely. Read the content carefully before using, and follow the instructions.
The following signs show:

⚠WARNING Indicates the possibility of causing death or serious injury when misused.
⚠CAUTION Indicates the possibility of causing injury or substantial damage when misused.

Indicates what the user "should not do."

⚠WARNING

◆ Do not moisten inside of the appliances. It may cause fire or electric shock. If the incident occurs, shut off the power supplied to the lens immediately.

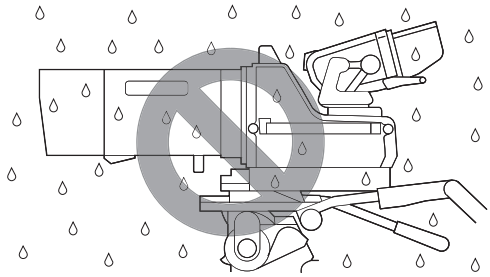

◆ Do not attach something to the lens other than Fujinon optional accessories that are designed to be attached to the lens; do not put something on the lens. An abnormal object attached to or on the lens may fall in operation of the camera causing a serious accident.

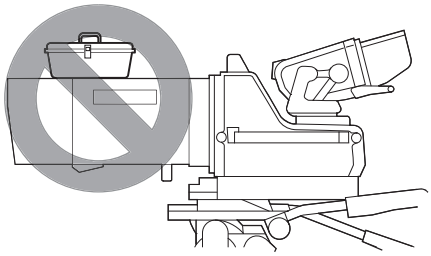

◆ If the camera is declined by 45 degrees or more, there may be a case that the lens installed on the camera falls. If it is required to shoot an object with the camera in the posture stated above, before using the camera, a proper measure should be taken on the lens to avoid falling.

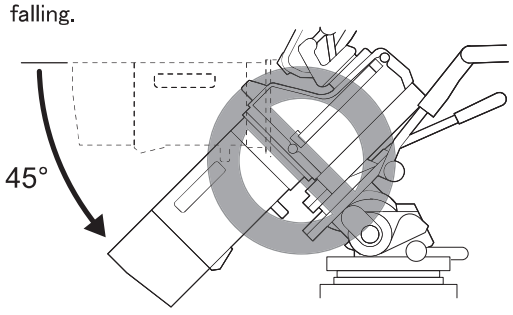

◆ Do not look at any sorts of strong illuminant such as the sun through the lens. Eyes could be harmed.

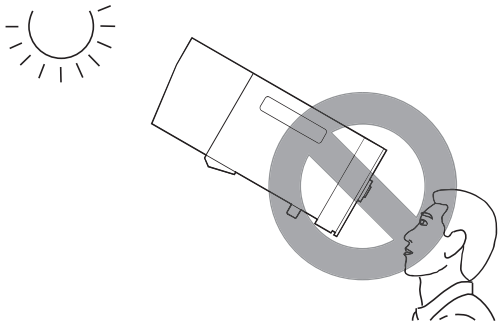

◆ Be sure to attach all the parts securely. Dropping any parts from a height may cause severe accidents.
◆ Before operating the camera, confirm that there is no object in the range of camera movement.
If the lens is bumped against an object with a strong force, there may be a case that the lens falls from the camera causing a serious accident.

FOR YOUR SAFETY USE

⚠ CAUTION

- Take care when carrying the lens. Dropping the lens while carrying may cause injury.
- Before supplying the power to the lens, make sure all the parts are connected correctly.
- Before connecting or disconnecting the lens cable, be sure to shut off the system power. If the lens cable is connected or disconnected while power is supplied, that may cause trouble or a malfunction.
- In order to install or release the lens cable, be sure to hold the joint part. Do not damage the cable by gripping. It may cause fire or electric shock.
- If any sorts of incidents such as unusual smoke, noise, smell or obstacles are found, shut off the power supplied to the lens and pull out the lens cable immediately. Please notify the sales agent from which you purchased the lens.
- Do not remodel the product: it may impair the functions of product or cause electric shock.

NOTICE

- Lens and its accessories are extremely precise instrument, then be sure not to apply the strong impacts to them.

  The bayonet mount part of this product protrudes from the flange surface of the lens mount (with hook) toward the rear. Be sure not to subject the bayonet mount part and lens part to impact when attaching or detaching the lens.
- There may be a case that the glasses of the lens mist when the lens is carried from a cool place to a place of high temperature and high humidity. To avoid a mist on the glasses, before moving the lens, let the lens adjust to the ambient temperature of the place where the lens will be used.
- Be sure not to apply impact to the front part of the lens when operating the camera.
- Put the cap on the lens while the camera is not used.
- If an accessory to be attached to the lens is equipped with a mechanical drive relaying part, before attaching it, check the joint part and get rid of all obstacles. If there are any unusual conditions, please contact the sales agent from which you purchase the product.
- When the lens is used in the weather of fog, raining, or snowing, cover up the lens to prevent it from the water.
- When this product is used or is attached or detached in an environment with an excess of dust or fine particles, make sure to prevent dust or fine particles from entering into the product. If dust sticks to or gets inside the product, it may cause a malfunction.
- When this product is used, stored, or put in standby state in a high- or low-temperature environment, provide heat shielding or thermal insulation measures to prevent damage to this product and the entire camera system.
- To minimize the impact to the lens in transportation, set the zoom to the wide end and the focus to the infinity side end before releasing the lens from the camera.

MEMO

PRIOR TO USE

(1) Before Installing onto Camera

When it is required to install this lens on a Sony studio camera (Ex. HDC-4300) or on a Sony large lens adapter (Ex. HDLA-1500), remove the pin on the bayonet mount of the lens, and attach it to the threaded hole in the mount frame. To install this lens on another camera, reinstall the pin on its former position.

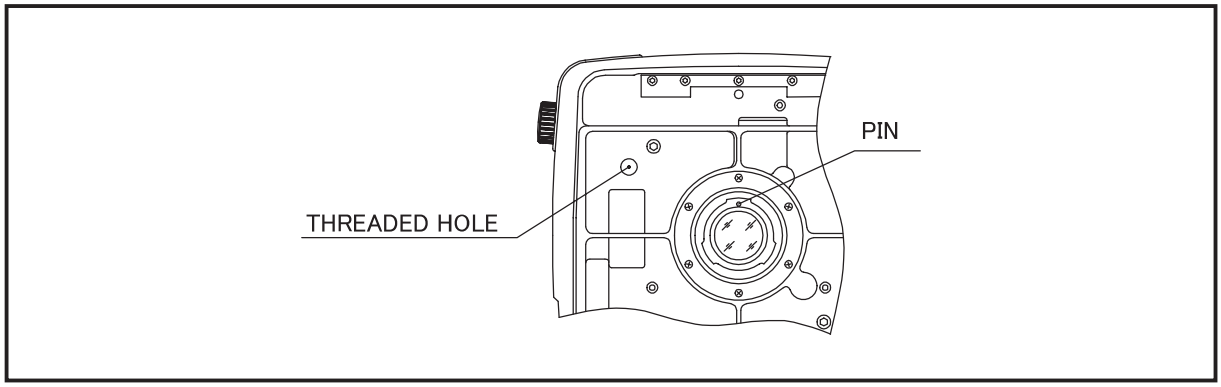

(2) Caution when using the lens supporter

When using this lens with a Fujinon lens supporter (ELH-*) attached, use a power source connecter (see "Name and Function of Each Part") to supply power from the lens side. If power is not supplied, correct operation may not occur.

(3) Enclosure of Desiccant

The inside of this lens is able to enclose desiccant in order to eliminate humidity that may mist the surfaces of the internal glasses. A desiccant bag for storage was enclosed in the desiccant enclosure place before shipment at the factory. Prior to use, take out this bag first, and put new desiccant bags in that place as follows:

a. There are twelve desiccant bags in the trunk. Take out two of them to use. The rest should be used when the exchange of the desiccant is required.
b. Loosen the two lens shroud attaching knobs on the both sides of the lens. Draw the shroud towards the front of the lens to detach it from the body.
c. Remove the four screws to take off the lid.
d. Take out the desiccant bag for storage.
e. Fold new desiccant bag and put it in the desiccant enclosure place.
f. Put the detached lid in its place and reinstall the four screws. Finally, reinstall the lens shroud.

Note 1. Perform the above procedure in a dust-free place.

Note 2. In a humid region, it is recommended to change the desiccant bags two times a year. The desiccant being jellied indicates the time when it must be exchanged.

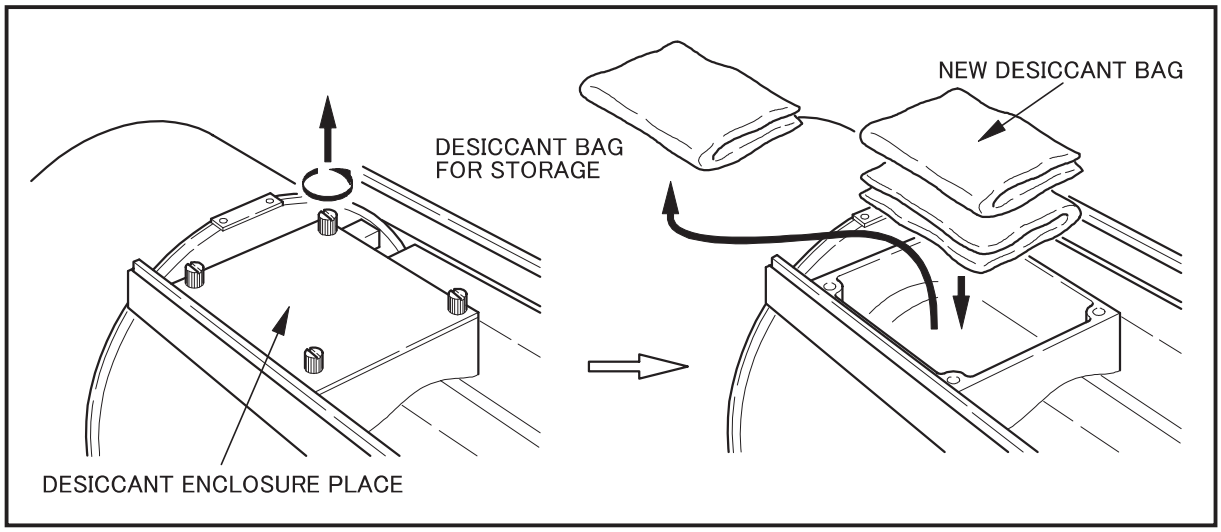

(4) Setting of Camera Mode

If the camera to be used with is not capable of serial communication with a lens, set the communication mode (camera mode) of the lens to OFF.

Setting Method

First, remove the shroud.

The shroud can be removed by pulling it towards the front after loosening the two lens shroud attaching knobs on both sides of the lens.

When the shroud is removed, the MECCON board can be seen on the right side surface of the lens (viewed from front of the lens).

Set the dip switch (SW3150) No. 1 (CAMERA-SER) on the MECCON board to "OFF."

Note. The serial communication function is set to "ON" before shipment at the factory.

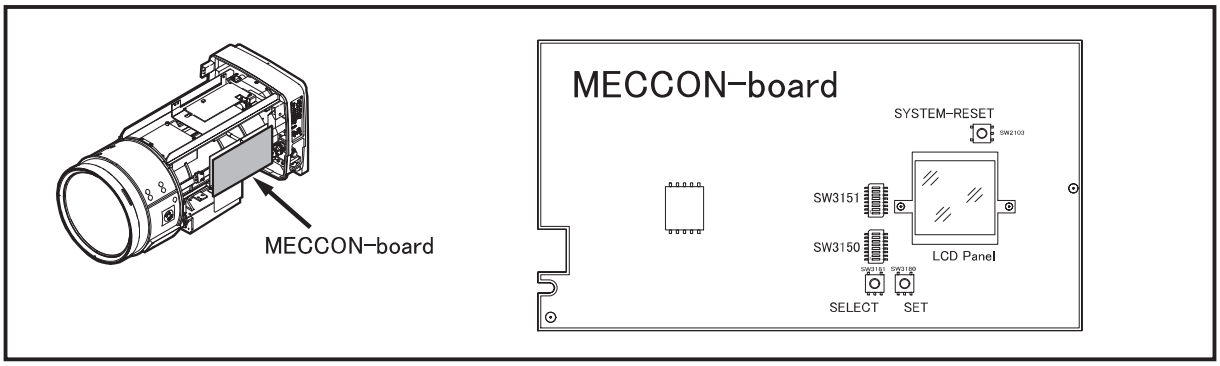

MEMO

MEMO

1. GENERAL DESCRIPTION

Fujinon TV lens of UA125 × 8 series is a high performance zoom lens designed for 2/3" format UHD color cameras.

This lens has the following features.

- High magnification zoom
  Its super high zoom ratio of 125 times and a built-in 2 times range extender make it super narrow angle zoom lens with a maximum focal length of 2000 mm. In spite of super high zoom ratio, the maximum relative aperture is 1:1.7.
- Function of compensation for change of field angle
  This lens incorporates a function that compensates for the change of the field angle caused by focusing.
  The setting of this function can be switched to "ON" or "OFF" using the switch on the control board.
- Bilt-in Optical stabilizer mechanism
  This lens is equipped with an anti-vibration mechanism. With this mechanism, even in the location in the strong wind or on an unsteady platform, a stable image can be derived thanks to the vibration detecting sensor and the compensating optical system in the lens.
- High precision digital control
  This lens is a digitally controlled by a high performance processor.
  By performing high-speed digital processing, each part of the lens is controlled with high precision
  In addition, this lens can be controlled with an external controller or computer using the RS - 232C interface.

With all features described above, this lens is compact in size and light in weight, therefore the lens is particularly useful for field applications.

2. LIST OF COMPONENTS

■ Standard Components

1. Lens package ····· 1
2. Front lens cap ····· 1
3. Rear lens cap ····· 1
4. Claening kit ····· 1
5. Operation manual（This book） ····· 1

3. SPECIFICATIONS

ITEM \ LENS		UA125×8BESM-S35	
Application		2/3" Format Color Camera (Prism Optical System)	
Aspect Ratio		16 : 9	
Image Format		9.59 × 5.39 mm (ϕ 11.0 mm)	
Focal Length		8 ～ 1000 mm	[16 ～ 2000 mm] *1
Zoom Ratio		125 ×	
Extender magnification Ratio		2 ×	
Maximum Relative Aperture (F No.)		F1.7 (8 ～ 340 mm) ～ F5 (1000 mm)	[F3.4 (16 ～ 680 mm) ～ F10 (2000 mm)] *1
Iris Range		F1.7 ～ F16、close	
Flange Focal Length (in Air)		48 mm (See Fig. 1.)	
Minimum Object Distance (from Front of Lens)		3 m (0.3 m in Macro Operation)	
Field Angle (H×V)	Wide	61.9° × 37.2°	[33.4° × 19.1°] *1
	Tele	0.55° × 0.31°	[0.27° × 0.15°] *1
Object Area at M.O.D. (H×V)	Wide	3198 × 1799 mm	[1677 × 943 mm] *1
	Tele	27 × 15 mm	[14 × 8 mm] *1
Operation range of tilt		± 45°	
Iris Control		Servo	
Zoom Control		Servo (Min. Op. Time: Approx. 1 s *2)	
Focus Control		Servo (Min. Op. Time: Approx. 0.8 s) or Manual	
Anti-vibration Mechanism			
Direction of Compensation		Vertical + Horizontal or Vertical Only	
Compensation mode		HIGH or STD.	
Mount		Bayonet mount (See Fig. 1.)	
Power Consumption (at 12V DC, Approx.)	Quiescent	9.6 W	
	Maximum	27 W	
Dimentions (H × W × L)		258 × 264 × 635 mm	
Mass (Approx.)		26.6 kg	

*1 The values in the brackets are given when the 2 × range extender is used.

*2 With the zoom high speed servo module, the minimum operating time is about 0.6 sec.

MEMO

4. NAMES AND FUNCTIONS

Note. The encircled numbers indicate the numbers in the outline drawing (Fig. 1).

①Tally Lights (2 places)

②Handles (2 places)
To carry this lens, hold these handles with both hands.

③Shroud Attaching Knobs (2 places)
The knobs to fix the lens shroud to the body of the lens.

④Extender Remote/Manual Select Switch
To select the extender manually, set this switch to "MANU."
To select the extender by means of a remote control unit such as a range selector, set this switch to "REMO."

⑤Extender Select Knob
The extender manual selection is performed by means of this knob.

⑥Zoom, Iris, Extender Indicator
This indicator shows the present positions of the zoom, iris and extender.

⑦Indicator ON/OFF Select Switch
Operation of this switch can select ON or OFF of "Zoom, Iris, Extender Indicator."

⑧Hood
This hood prevents the extra light from entering the lens.

⑨Servo Modules (2 places)
To control the lens with servo control units, install servo modules.

⑩Manual Module (2 places)
To control the lens with manual control units, install manual modules.

⑪ RS-232C Connector
In either self-diagnosis operation using a Fujinon Find System or remote-control operation using a computer, the communication with a computer can be made through this connector.
The RS-232C connecter is located inside the lens.
When it is required to control the lens using a personal computer, detach the partial cover under the connector.
The cover can be detached by removing the four screws that attach the cover.
(For the lens control protocol, contact the sales agent from which you purchased the lens.)

⑫Connector for Macro Control
This connector is provided for a macro control unit.

⑬Connector for Encoder Output (HR25-9R-20S, HIROSE)
The connector for outputting digital signals derived from the iris, focus, and zoom encoders.
For the output signal, refer to section "Specifications of Encoder Output Signal" on page 12.

⑭Connector to Range Selector
This connector is provided for either a range selector or an iris control unit.

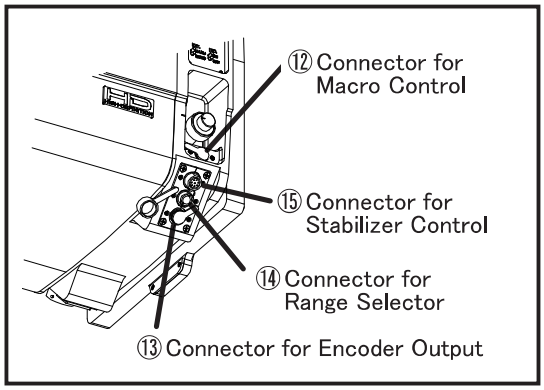

⑮Connector for Stabilizer Control
This connector is provided for an optical stabilizer control unit with which the camera operator can select the optical stabilizer function of the lens. (To select the optical stabilizer function using an optical stabilizer control unit, set the stabilizer H+V/OFF/V select switch of the lens to OFF.)

⑯ F.f Adjusting Knob

The flange focal length of the lens is adjusted by means of this knob.

⑰ F.f Locking Knob

This knob secures the F.f adjusting knob.

⑱ Bayonet Mount

The bayonet type mount used in installation onto a portable camera.

⑲ Pin

In installation of the lens, align this pin with the appropriate hole in the mounting surface of the camera or the lens supporter.

⑳ Hook

In installation of the lens, hang this hook on that on the mounting surface of the camera or the lens supporter.

㉑ Pin

In installation of the lens onto a portable camera, align this pin with the hole in the mounting surface of the camera.

㉒ Spring Pin

In installation of the lens, this spring pin enters the appropriate hole in the mounting surface of the camera or the lens supporter and prevent shaking of the lens.

㉓ Connector to Camera

The electrical connection with the camera is made through this connector.

㉙ Stabilizer HIGH/STD. Select Switch

The stabilizing characteristic of the optical stabilizer can be selected by means of this switch. (When an optical stabilizer control unit is connected to this lens, the setting of the select switch on the optical stabilizer control unit has priority to the setting of this switch. If the optical stabilizer control unit connected to this lens is not equipped with a select switch, the stabilizing characteristic cannot be changed.)

㉕ Tally Lights HIGH/LOW/OFF Select Switch

The intensity of illumination of the tally lights can be selected from High or Low intensity.
When the switch is set to OFF, the tally lights go out.

㉖ Connector for Focus, Zoom Control (PT02A-16-26S, BENDIX)

This connector is provided for a connection cable, one or two ends of which are connected to a focus control unit and a zoom control unit.

㉗ Connector for Power Source (XLR-4-32-F152, ITT CANNON)

This connector is provided for a DC power source.
If the camera is not able to supply sufficient electric power to the lens, use a DC power source.

Connctor	ITT CANNON (XLR-4-32-F152)
Pin1	GND(0V)
Pin2	NC
Pin3	NC
Pin4	+12V(+12 ～ +16V), More than 3A

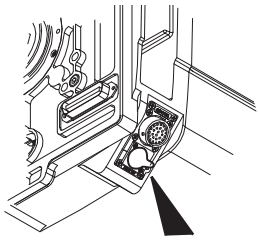

Mount a cap on the power connector towards the horizontal.

㉘ Stabilizer H+V/OFF/V Select Switch

With this switch set to "H+V," the optical stabilizer functions responding to the vibration of both vertical and horizontal directions, while set to "V," it functions responding to the vibration of only vertical direction.
When this switch is set to "OFF," the anti-vibration mechanism does not operate.
(When an optical stabilizer control unit is connected to this lens, the setting of the select switch on the optical stabilizer control unit has priority to the setting of this switch.)

㉔ Macro ON/OFF Select Switch

With this switch set to ON, the macro operation (taking a close-up shot) can be performed.

5. INSTALLATION

Description in this section applies to installation of a lens onto a studio camera.

For installation onto a portable camera, a lens supporter is required. Refer to the operation manual of the lens supporter.

Note1. Prior to installation, turn off the power of the camera.

Note2. After installation, when the power of the camera is turned on, the initial settings of the stabilizer mechanism and the main lens are carried out for about ten seconds and several seconds respectively at the same time. During the setting of the stabilizer mechanism, do not perform panning or tilting operation of the camera; the indicator of the optical stabilizer control unit linked to the lens blinks. During the setting of the main lens, the operation of the lens cannot be performed. After the setting, the zoom returns to its former position.

⚠ WARNING Be sure to attach all the parts securely. Dropping any parts from a height may cause severe accidents.

■ Installation onto Studio Camera

a. Holding the lens package with both hands, hang the hook at the top rear of the package on the hook at the top front of the camera, and align the pin on the lens mount with the groove in the camera mount.

b. Swing the package down so that the spring pin on the lens mount gets in the hole in the camera mount. In this procedure, the electrical connections, via the connectors on both mounting surfaces, is automatically made.

c. Securely fix the lens package by means of the lens mount locking knob attached to the camera mount.

Note. Make sure to adjust the flange focal length when installing the lens on a camera for the first time or installing it on another camera (refer to the next page for details).

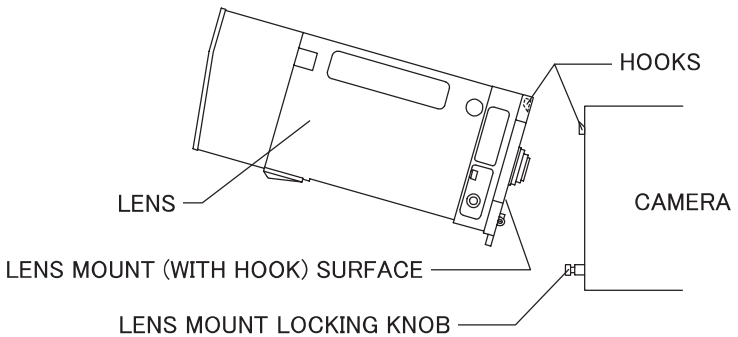

MEMO

6. SETTING AND ADJUSTMENT OF THE LENS

The various settings of the entire lens are performed using the dip switches installed on the control board. The detailed settings and adjustments of the functions of this lens are performed using the menus on the LCD panel.

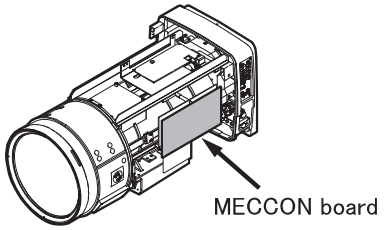

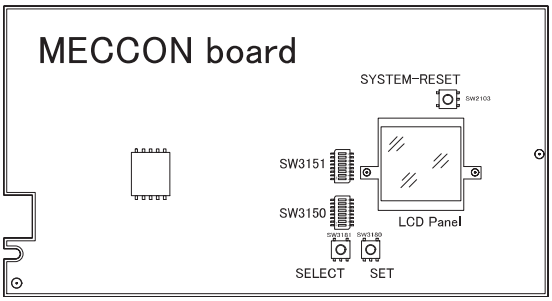

To operate the dip switches and LCD panel, remove the shroud.

Note. Be sure not to operate switches or control knobs that are not described in this operation manual. If the settings of the switches or control knobs used for the system are changed, the lens may not operate properly.

MEMO

6.1 Dip Switch Settings

The functions of the dip switches installed on the MECCON board are described below:

SW3151

Switch No.	Name of function	Default setting	Function	Description
1	CAM[0]	OFF	Camera manufacturer selection	Indicates the manufacture of the camera (communication protocol) to be connected to the lens using CAM[1 : 0]. Seetting : [OFF,OFF]=SONY,[OFF,ON]=Panasonic, [ON,OFF]=GrassValley,[ON,ON]=Hitachi/Ikegami
2	CAM[1]	OFF		
3	RESERVE3	OFF	REserved	Not used : Do not change the default value setting of this switch.
4	RESERVE4	OFF		
5	RESERVE5	OFF		
6	RESERVE6	OFF		
7	TALLY-ADJUST	OFF	Tally light level adjustment ON/OFF	Sets the light level of the tally lamp. (TALLY-LOW) ON = The tally lamp will turn on at the light level that was set using the menu on the LCD panel. OFF = The tally lamp will turn on at the light level that was set before shipment at the factory.
8	BACKLIGHT	OFF	LCD backlight adjustment ON/OFF	Sets the light level of the LCD panel backlight. ON = The backlight will turn on at the light level that was set using the menu on the LCD panel. OFF = The LCD backlight will turn on using the default light level (default value).

SW3150

Switch No.	Name of function	Default setting	Function	Description
1	CAMERA-SR	ON	Camera serial communication ON/OFF	Permits or prohibits serial communications with the camera. ON =Enables serial communications. OFF=Disables serial communications.
2	BCT	ON	Field angle compensation function ON/OFF	Compensates for the change in the field angle caused by the focusing operation. (BCT : Breathing Compensation Technorogy) ON =Enables compensation for change in the field angle. OFF=Disables compensation for change in the field angle.
3	IRIS-GAINUP	ON	Increase Autoiris-gain function ON/OFF	Switches the feedback gain of iris in the auto iris mode. ON =1/8 OFF=1/16
4	IRIS-COMP	ON	Iris compensation function ON/OFF	Compensates for the phenomenon where the transmitted light intensity changes depending on whether the extender is used or not. ON =Compensates iris. OFF=Does not compensate iris.
5	IRIS-CLOSE	ON	Iris forced close function ON/OFF	Sets the characteristic of the control function for closing the iris by either a camera or external device. ON =Forcibly closes the iris when the iris control signal exceeds the threshold. OFF=Closes the iris in accordance with the iris control signal sent from the camera.
6	RESERVE1	ON	Reserved	Not used : Do not change the default value setting of this switch.
7	Z/F-CUSTOM	ON	Customization function ON/OFF	Sets whether the operating characteristic curve and starting/stopping speed of zooming and focusing operations are set by a user or fixed to default values. ON =Uses the customization function. OFF=Uses default values for the characteristic of the zooming and focusing operations. (The settings for the characteristic of the zooming and focusing operations can be set to “ON” or “OFF” individually using the menus on the LCD panel.)
8	RESERVE2	ON	Reserved	Not used : Do not change the default value setting of this switch.

Note1. Even when some of the functions are set to “ON” using the dip switches, those same functions have been set to “OFF” using the menus on the LCD panel. For system operating conditions, check the settings in the respective menus of the LCD panel.

6.2 Settings and Operations Performed by LCD Panel

This lens allows detailed characteristics of the lens (e.g. response characteristics and optical compensation) to be set and adjusted using the menus on the LCD panel of the control board.

Note2. For detailed descriptions on the menu operation of the LCD panel, refer to the LCD panel user manual.
You can download the LCD panel user manual from the Fujifilm website.
URL https://www.fujifilm.com/support/optical_devices/tv_cine/manuals/

7. ADJUSTMENT OF FLANGE FOCAL LENGTH

The flange focal length is the distance from the flange (mounting surface) of a lens to the focal plane.

If the focal plane of the lens does not coincide with the image plane of the camera, the object will be out of focus during a zoom operation.
To prevent this from happening, the adjustment of the flange focal length is required.
Make sure to carry out the adjustment when installing the lens to a camera for the first time or installing it to another camera.

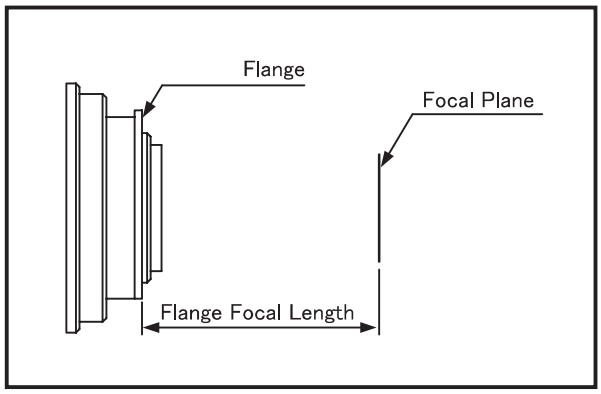

7.1 Conditions of Object and Iris Position

Object : an object that provides clear and easy focusing even at the wide end
Object distance : about 7.5m (measured from front glass of the lens)
Iris position : maximum aperture or near that condition

7.2 Adjustment

Carry out the adjustment observing a monitor.
For the operation of focusing and zooming, refer to sections “Focusing Operation” and “Zooming Operation (page 8).

a. Loosen the F.f locking knob by rotating it counterclockwise.
b. At the wide end in the zoom range, focus on the object by means of the F.f adjusting knob.
c. At the tele end, focus on the object by means of a focus control unit.
d. Repeat steps ‘b’ and ‘c’ several times so that the F.f is adjusted completely.
e. Finally tighten the F.f locking knob by rotating it in the direction of the arrow.

Note. Before adjustment, set the macro ON/OFF select switch on this lens to OFF. If a remote macro control unit (EA-3A-10A, 11A, etc) is linked to this lens, set the remote macro ON-OFF select switch on the unit to OFF.

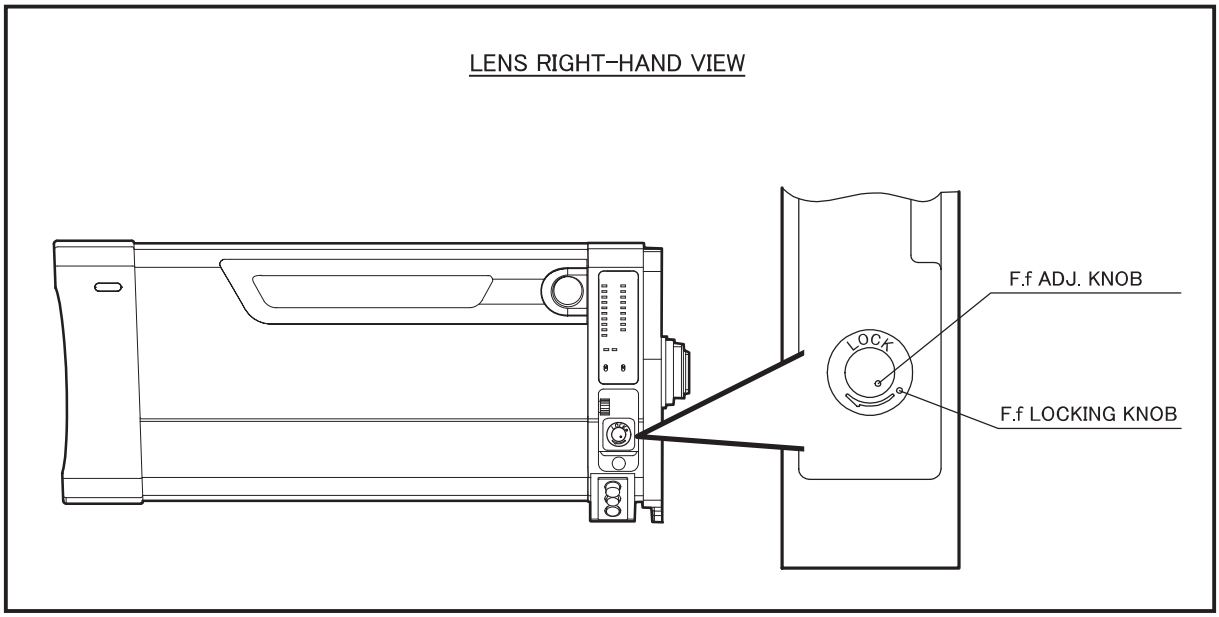

7.3 Adjustment by F.f Manual Adjusting knob

The flange focal length adjustment mechanism incorporated in this lens is driven under servo control.
However, even in the case that the power is not supplied to the flange focus length adjustment mechanism for any reason, the adjustment can be carried out using the F.f manual adjusting knob located inside the lens.

a. Rmove the shroud.

The shroud can be removed by pulling it towards the front after loosening the two lens shroud attaching knobs on both sides of the lens.

b. Set dip switch SW2305 (F.f. SERVO : flange focal length servo) on the MECCON board to "OFF."

c. At the wide end in the zoom range, focus on the object by means of the F.f adjusting knob.

d. At the tele end, focus on the object by means of a focus control unit.

e. Repeat steps 'c' and 'd' several times so that the F.f is adjusted completely.

Note. For normal operation, set dip switch SW2305 on the MECCON board to "ON."
If dip switch SW2305 is set to "ON," the flange focal length adjustment mechanism will be driven under servo control.

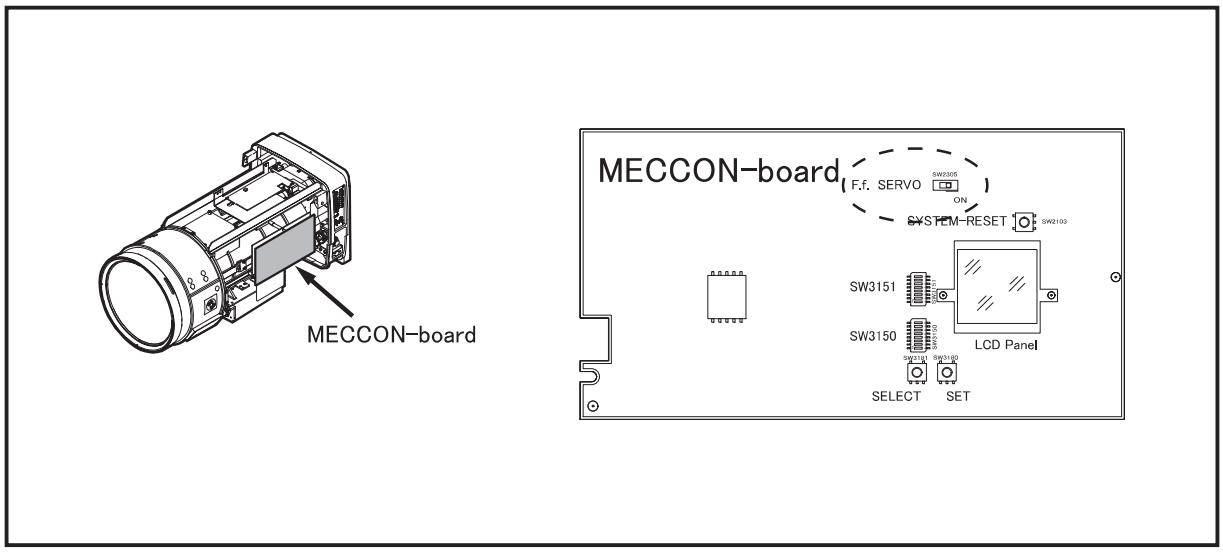

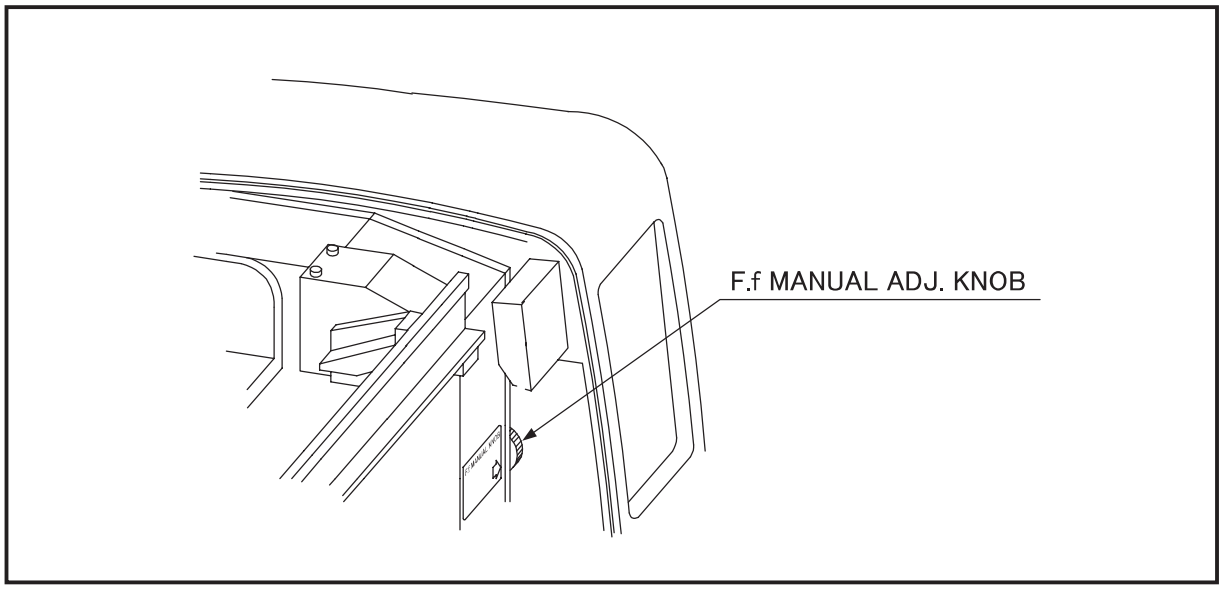

8. OPERATING INSTRUCTION

⚠ WARNING If the camera is declined by 45 degrees or more, there may be a case that the lens installed on the camera falls.
If it is required to shoot an object with the camera in the posture stated above, before using the camera, a proper measure should be taken on the lens to avoid falling.

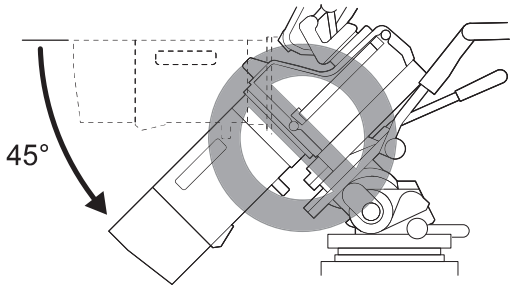

8.1 FOCUSING OPERATION

Focus is controlled by means of a control unit linked with the lens.
For operating instruction of a control unit, refer to the operation manual of the control unit.

Control Unit for Servo Operation

- Focus Position Demand Unit : EPD-＊
- Shot Box : ESB-＊

Control Unit for Manual Operation

- Focus Grip : BFH-＊

Note1: To control the focus of this lens by servo operation, use the digital control unit.
Note2: When using the control unit for manual operation, be sure the internal mechanism is not pressed hard against the final control element. If the internal mechanism is subjected to a strong impact, this may cause the adjustment to deviate or cause a malfunction.

8.2 ZOOMING OPERATION

Zoom is controlled by means of a control unit linked with the lens.
For operating instruction of a control unit, refer to the operation manual of the control unit.

Control Unit for Servo Operation

- Zoom Rate Demand Unit : ERD-＊
- Shot Box : ESB-＊

Control Unit for Manual Operation

- Zoom Handle : BZH-＊

Note1: To control the focus of this lens by servo operation, use the digital control unit.
Note2: When using the control unit for manual operation, be sure the internal mechanism is not pressed hard against the final control element. If the internal mechanism is subjected to a strong impact, this may cause the adjustment to deviate or cause a malfunction.

8.3 IRIS OPERATION

Iris is controlled by an iris control signal (auto iris or manual) derived from the camera.
Iris can also be controlled by means of an iris control unit (EIC-＊) linked with the lens.
For operating instruction of an iris control unit, refer to the operation manual of the iris control unit.

8.4 EXTENDER SELECTION

There are two methods of extender selection: “Manual Selection” using the extender select knob on the lens and “Selection by Accessory” using an optional accessory.

8.4.1 Manual Selection

a. Set the extender remote/manual select switch on the lens (viewed from front glass side of lens) to “MANU.”
b. Rotate the extender select knob on the lens to select the extender.

8.4.2 Selection by Accessory

The extender can be selected by means of a range selector or an accessory that has an extender selection switch.

a. Set the extender remote/manual select switch on the lens to “REMO.”
b. Select the extender by means of an accessory linked with the lens. For operating instruction of an accessory, refer to the operation manual of the accessory.

8.5 MACRO OPERATION

The macro operation (taking close shot) can be done by means of either a remote macro control unit (EA-3A-10A, 11A, etc) or a zoom control unit (zoom rate demand unit, etc.).

8.5.1 Operaion by Remote Macro Control Unit

a. Set the zoom at the wide end by means of a zoom control unit (zoom rate demand unit, etc.), and the focus at the M.O.D. side end by means of a focus control unit (focus position demand unit, etc.).
b. Set the remote macro function to “ON” by means of a remote macro control unit.
c. Perform the focusing by means of the position set knob of the remote macro control unit.

For operating instruction of control units, refer to their operation manuals.

8.5.2 Operation by Zoom Control Unit

a. Set the focus at the M.O.D. side end by means of a focus control unit (focus position demand unit, etc.).
b. Set the remote macro function to “ON” by means of a remote macro control unit.
c. Perform the focusing by means of a zoom control unit (zoom rate demand unit, etc.).

For operating instruction of control units, refer to their operation manuals.

MEMO

9. ADJUSTMENT OF IRIS AMPLIFIER

Depending on matching with a camera, hunting of the iris movement occurs.
If the iris operation continues to be unstable or the response is too slow, the iris can be adjusted using the gain adjustment trimmer (RV2421) on the MECCON board. (Refer to "Teble 2" of Technical Drawings)
For the iris adjustment method, refer to the detailed user manual.
The detailed user manual can be downloaded from our website.
URL https://www.fujifilm.com/support/optical_devices/tv_cine/manuals/

10. BREATHING COMPENSATION TECHNOROGY(BCT)

This lens incorporates a function that compensates for the change of the field angle caused by focusing.
This function is enabled when dip switch (SW3150) No. 2 on the MECCON board is set to "ON."

Note : Even when this function is set to "ON" using the dip switch, the function may be set to "OFF" using the menu on the LCD panel. (refer to page 7)

This function works when the lens is operated with a digital zoom rate demand unit and a digital or servo focus position demand unit.

11. OPTICAL STABILIZER FUNCTION

This lens incorporates the optical stabilizer function that optically compensates for the shakes of the lens and base mount.
This function can be operated using the operation switches of the lens, external stabilizer controller, and either a zoom rate demand unit or a focus position demand unit with a stabilizer control function.
For priorities and detailed descriptions on the operations of each controller, refer to the detailed user manual.

Note :To use the stabilizer function for this product, connect the CN2100 jumper switch 2-3 on the MECCON board.

11.1 Stabilizer ON/OFF Control

11.1.1 Operation by Stabilizer Controller

When the optional stabilizer controller (EA-12A-xxxx) is connected to the connector for stabilizer control ⑮ of this product, the stabilizer function of the lens can be controlled from the stabilizer controller. In addition to the setting of the stabilizer ON/OFF control function, the stabilizing direction (H+V/V) can be set from the stabilizer controller.

11.1.2 Operation by Lens Switch

When the stabilizer H+V/OFF/V select switch ㉘ on the lens of the switch lens main body is set either to "H+V" or "V," the stabilizer function is activated. When the switch is set to "H+V," it compensates for vibration in both vertical and horizontal directions; while set to "V," it compensates for vibration in only the vertical direction. When it is set to "OFF," the operation of the stabilizer function is stopped.

11.1.3 Operation by Focus Control Unit or Zoom Control Unit

The stabilizer function can be set to "ON" or "OFF" by means of either a zoom rate demand unit or focus position demand unit that has the stabilizer control function, if such a unit is connected to the lens.

11.2 Selection of Stabilizing Characteristic

The stabilizing characteristic of the stabilizer function can be selected using the stabilizer HIGH/STD. select switch on the lens or stabilizer controller.

- HIGH mode : This mode is suitable for reducing shake while shooting in a stationary state.
- STD mode : This mode is suitable for suppressing unnatural motion caused by the stabilizer control.

12. MAINTENANCE

12.1 DAILY MAINTENANCE

■ Lens Cleaning

Prepare a mixture of 20% alcohol and 80% ether; soft, clean and lint free cloth or lens cleaning paper.

a. Brush off any dust and dirt from the glass surface with a soft brush.

b. Fold the cloth to a suitable size and moisten it with the mixture
Lightly wipe the glass surface by moving the cloth in a spiral course from the center to the periphery.

c. If the glass does not come clean for the first time, use another cloth and wipe similarly. Repeat step 'b' several times until the glass is thoroughly cleaned.

■ Check Connection Cords

Carefully inspect outer covering and terminals for cuts, scratches or other damages.

■ Optional Accessories

When the driving power is achieved by using optional accessories, any meshing part must be normal in shape and free from dust or any other foreign matter. Carefully check all the optional equipment prior to its installation. Any foreign matter should be removed immediately, and any malformed part should be serviced as soon as possible.

■ Lens Cap

If the lens is left in position on the camera body and the camera is not in use, be sure to place the lens cap (or the hood cap when the lens hood is on) in order to protect the front glass surface of the camera.

12.2 ELIMINATION OF WATER

If the moisture contained in the air is collected in the lens unit, it may produce stubborn soils on the glasses and rust on the metal parts.

Remove such moisture in the following manner:

1) Wipe away any moisture that has collected on the outside of the lens unit. Then place the lens unit in a sealed vinyl bag together with a drying agent so that the agent can absorb any moisture that remains.

2) If ample time is available for dehumidifying, leave the lens unit in a dry room after the moisture on the outside of the unit has been removed.

Note. The time required for total drying will vary according to the size of the lens unit, the amount of moisture present and the quantity of the drying agent used.
However, it is recommended that the lens unit be left in the bag for at least three hours. A new drying agent should be used for maximum effect.

12.3 STORAGE OF LENS

After use, wipe the lens clean, and with the lens cap on, place the unit in its storage box.

For safe storage of the lens, avoid hot or humid place, and avoid places containing corrosive gas or salt.

The lens should be occasionally removed and dried if stored for prolonged periods of time.

12.4 INSPECTION

If an abnormality occurs on the lens, contact the sales agent from which you purchased the lens.

To maintain the high performance for a long term for use, we recommend that a periodic inspection is conducted at least once a year.

Note that we may not be able to inspect and repair our products that have been remodeled on the user's end.

13. SPECIFICATIONS OF ENCODER OUTPUT SIGNAL

13.1. Connector

HIROSE HR25-9R-20S

13.2. Pin Assignment of Connector

See following table.

Pin Number	Signal	
1	N.C.	
2	GND (Digital)	
3	N.C.	
4	+5V (Zo Output Impedance : 1k Ω)	
5	N.C.	
6	N.C.	
7	N.C.	
8	Iris Encoder	Phase A (H 5V / L : 0V)
9		Phase B (H 5V / L : 0V)
10	Zoom Position	(Wide : 2 V / Tele : 7 V)
11	Stabilizer ON/OFF Signal	(ON : H = Open 、 OFF : L = 0V)
12	Zoom Encoder	Phase Z (H 5V / L : 0V)
13	Focus Position	(Near : 2 V / Far : 7 V)
14	Extender Signal	(× 1 : Open / × 2 : L = 0V) Open collector output.
15	Reference Voltage	5.0 V
16	Zoom Encoder	Phase A (H 5V / L : 0V)
17		Phase B (H 5V / L : 0V)
18	Focus Encoder	Phase A (H 5V / L : 0V)
19		Phase B (H 5V / L : 0V)
20	Signal GND (Analog)	

13.3. Waveforms of Output Signals

(1) Waveforms of Focus Encoder Output Signals
(when focus moves from inf. side toward MOD side)

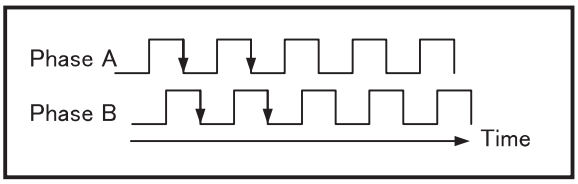

(2) Waveforms of Zoom Encoder Output Signals
(when zoom moves from wide side toward tele side)

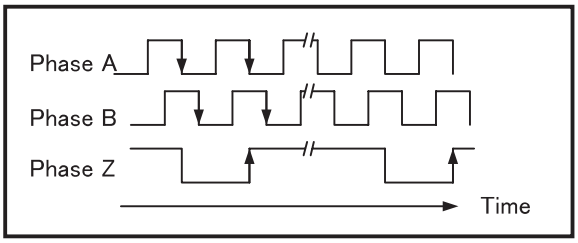

* The position of phase Z is not regulated to that of phase A or B.

(3) Waveforms of Iris Encoder Output Signals
(when iris moves from closed side toward open side)

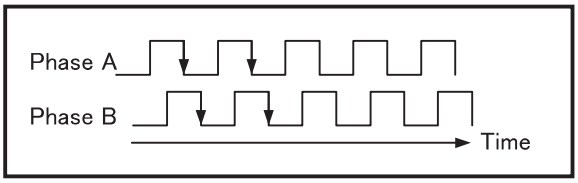

13.4. Resolution

	Resolution
FOCUS	16 bits
ZOOM	16 bits
IRIS	10 bits

14. OPTIONAL ACCESSORY

※ Use Fujinon original accessories, otherwise inherent performance of the lens may not be derived.

14.1 Focus Servo / Zoom Servo System

	ACCESSORY NAME	MODEL	REMARKS	
①	Servo Module	ESM-D51B	Normal speed module for driving zoom.	
		ESM-D52B	High speed module for driving zoom.	
②	Focus Position Demand Unit	EPD-51A-D02	Control unit for focus positional servo control.	having a knob with rods
③	Zoom Rate Demand Unit	ERD-30A-D01	Control unit for zoom rate control.	directly mounted on a pan bar
④	Connection Cable	EFZ-11E	For electrical connection between lens and EPD, ERD,	
⑤	Mounting Clamp	MCA-51	Used with EPD-51A-D02 for its installation.	

Configuration (Ex.)	Focus Servo/Zoom Servo System

※ Older servo module can not be used.
(ESM-D51, D52, etc.)

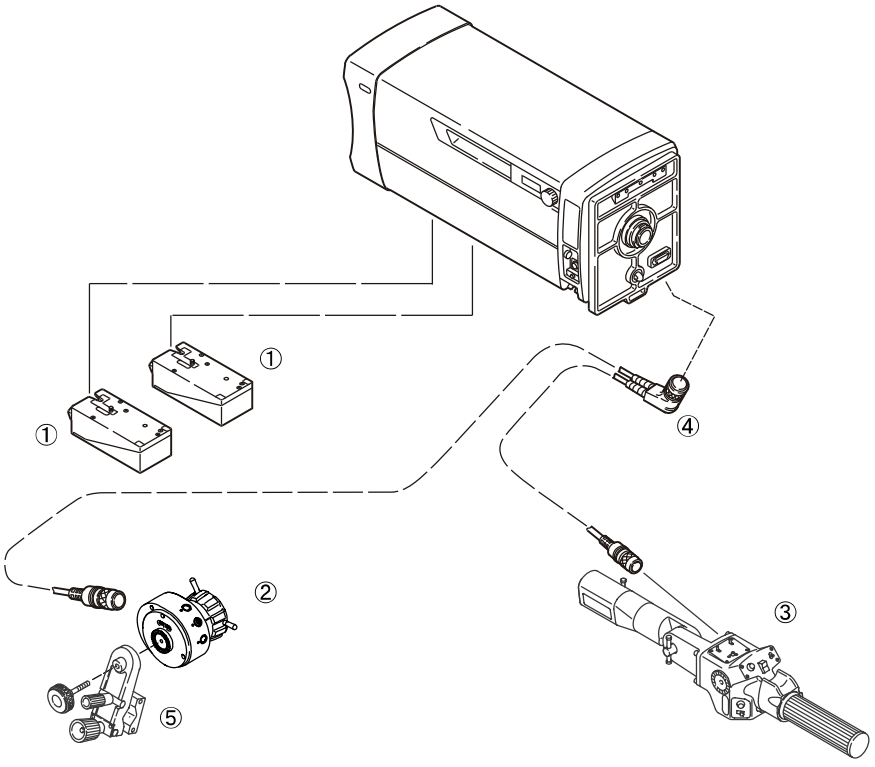

14.2 Other Accessories

	ACCESSORY NAME	MODEL	REMARKS
①	Range Selector	ERS-51B	Controller for local selection of extender. Required in zoom manual operation system.
②	Iris Control Unit	EIC-51B	Control unit for local iris control.
③	Remote Macro Control Unit	EA-3A-10A	Control unit used for focusing in macro operation.
④	Optical Stabilizer Control Unit	EA-12A-02B	Control unit for control of anti-vibration function.

Configuration (Ex.)	Other Accessories

