FUJINON TV LENS
富士能电视镜头

UA27×6.5BESM-E35

取扱説明書/Operation Manual/使用手册

富士フイルム株式会社
FUJIFILM Corporation
富士胶片株式会社

BB00039584-100
LP281B-E35 2903

日本語
ENGLISH
中文版
技術資料/Technical Drawings/技术资料

ENGLISH VERSION

◆ This operation manual is composed of the Japanese version, English version, Chinese version, and Technical Drawings.

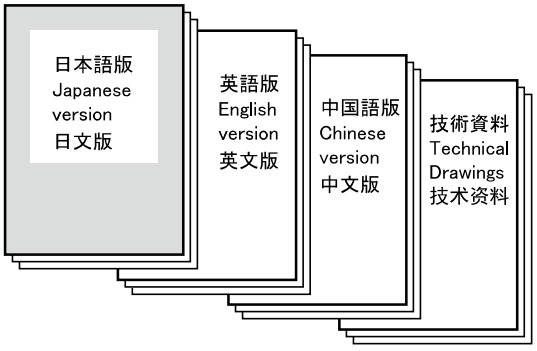

FCC REGULATIONS

This device complies with part 15 of the FCC Rules. Operation is subject to the following two conditions: (1) This device may not cause harmful interference, and (2) this device must accept any interference received, including interference that may cause undesired operation.

Note: This equipment has been tested and found to comply with the limits for a Class A digital device, pursuant to part 15 of the FCC Rules. These limits are designed to provide reasonable protection against harmful interference when the equipment is operated in a commercial environment. This equipment generates, uses, and can radiate radio frequency energy and, if not installed and used in accordance with the instruction manual, may cause harmful interference to radio communications. Operation of this equipment in a residential area is likely to cause harmful interference in which case the user will be required to correct the interference at his own expense.

CAUTION : Changes or modifications not expressly approved by the party responsible for compliance could void the user's authority to operate the equipment.

Canadian Radio Interference Regulation

CAN ICES-3(A) / NMB-3(A)

CAUTION : This Class A digital apparatus complies with Canadian ICES-003.

Disposal of Electrical and Electronic Equipment in Private Households

In the European Union, Norway, Iceland and Liechtenstein:

This symbol on the product, or in the manual, and/or on its packaging indicates that this product shall not be treated as household waste. Instead it should be taken to an applicable collection point for the recycling of electrical and electronic equipment.



By ensuring this product is disposed of correctly, you will help prevent potential negative consequences to the environment and human health, which could otherwise be caused by inappropriate waste handling of this product.

CONTENTS

■ FOR YOUR SAFETY USE ····· ii

■ PRIOR TO USE ····· iv

- BEFORE INSTALLING ONTO CAMERA ····· iv
- CAUTION WHEN USING THE LENS-SUPPORTER ····· iv
- ENCLOSURE OF DESICCANT ····· iv
- SELECTION OF CAMERA ····· v
- SETTING OF CAMERA MODE ····· vi

■ GENERAL DESCRIPTION ····· 1

■ LIST OF COMPONENTS ····· 1

■ SPECIFICATIONS ····· 2

■ NAMES AND FUNCTIONS ····· 3

■ INSTALLATION ····· 5

■ ADJUSTMENT OF FLANGE FOCAL LENGTH ····· 6

■ OPERATING INSTRUCTION ····· 8

①FOCUSING OPERATION ····· 8

②ZOOMING OPERATION ····· 8

③IRIS OPERATION ····· 8

④EXTENDER SELECTION ····· 9

⑤MACRO OPERATION ····· 9

■ ADJUSTMENT OF IRIS AMPLIFIER ····· 10

■ ABOUT FUNCTION OF COMPENSATION FOR CHANGE OF FIELD ANGLE ····· 11

■ SPECIFICATIONS OF ENCODER OUTPUT SIGNAL ····· 12

■ MAINTENANCE ····· 13

①DAILY MAINTENANCE ····· 13

②ELIMINATION OF WATER ····· 13

③STORAGE OF LENS ····· 13

④INSPECTION ····· 13

■ TECHNICAL DRAWINGS

1. Outline drawing ····· Fig. 1
2. Wiring diagram ····· Fig. 2
3. Camera–Lens Interface ····· Table. 1
4. Setting of switches : A-board ····· Table. 2
5. Setting of switches : B-board ····· Table. 3

FOR YOUR SAFETY USE

This content explains important notices for all the users to use this product safely. Read the content carefully before using, and follow the instructions.

The following signs show:

⚠WARNING
Indicates the possibility of causing death or serious injury when misused.

⚠CAUTION
Indicates the possibility of causing injury or substantial damage when misused.

Indicates what the user "should not do."

⚠WARNING

◆ Do not moisten inside of the appliances. It may cause fire or electric shock. If the incident occurs, shut off the power supplied to the lens immediately.

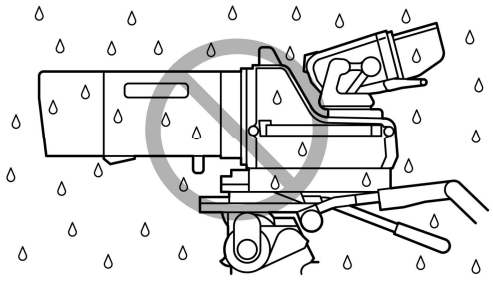

◆ Do not attach something to the lens other than Fujinon optional accessories that are designed to be attached to the lens; do not put something on the lens. An abnormal object attached to or on the lens may fall in operation of the camera causing a serious accident.

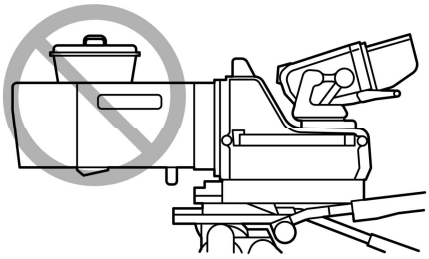

◆ If the camera is declined by 45 degrees or more, there may be a case that the lens installed on the camera falls. If it is required to shoot an object with the camera in the posture stated above, before using the camera, a proper measure should be taken on the lens to avoid falling.

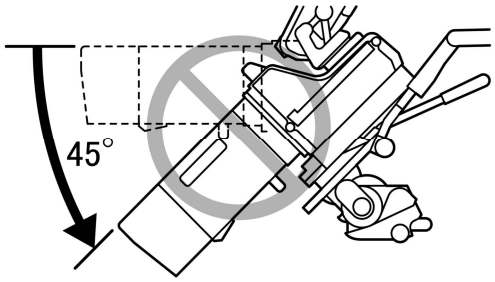

◆ Do not look at any sorts of strong illuminant such as the sun through the lens. Eyes could be harmed.

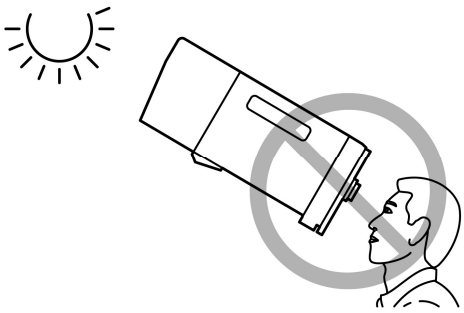

◆ Be sure to attach all the parts securely. Dropping any parts from a height may cause severe accidents.

◆ Before operating the camera, confirm that there is no object in the range of camera movement. If the lens is bumped against an object with a strong force, there may be a case that the lens falls from the camera causing a serious accident.

⚠CAUTION

- ◆ Take care when carrying the lens. Dropping the lens while carrying may cause injury.
- ◆ Before supplying the power to the lens, make sure all the parts are connected correctly.
- ◆ In order to install or release the lens cable, be sure to hold the joint part. Do not damage the cable by gripping. It may cause fire or electric shock.
- ◆ If any sorts of incidents such as unusual smoke, noise, smell or obstacles are found, shut off the power supplied to the lens and pull out the lens cable immediately. Please notify the sales agent from which you purchased the lens.
- ◆ Do not remodel the product: it may impair the functions of product or cause electric shock.

NOTICE

- ◆ Lens and its accessories are extremely precise instrument, then be sure not to apply the strong impacts to them. If the lens is of a type in which the rear lens protrudes from the flange surface of the lens mount, be sure not to apply impact to the lens part when installing or releasing.
- ◆ There may be a case that the glasses of the lens mist when the lens is carried from a cool place to a place of high temperature and high humidity. To avoid a mist on the glasses, before moving the lens, let the lens adjust to the ambient temperature of the place where the lens will be used.
- ◆ Be sure not to apply impact to the front part of the lens when operating the camera.
- ◆ Put the cap on the lens while the camera is not used.
- ◆ If an accessory to be attached to the lens is equipped with a mechanical drive relaying part, before attaching it, check the joint part and get rid of all obstacles. If there are any unusual conditions, please contact the sales agent from which you purchase the product.
- ◆ When the lens is used in the weather of fog, raining, or snowing, cover up the lens to prevent it from the water.
- ◆ To minimize the impact to the lens in transportation, set the zoom to the wide end and the focus to the infinity side end before releasing the lens from the camera.

PRIOR TO USE

■ Before Installing onto Camera

When it is required to install this lens on a Sony studio camera (Ex. HDC-2000) or on a Sony large lens adapter (Ex. HDLA-1507), remove the pin on the bayonet mount of the lens, and attach it to the threaded hole in the mount frame. To install this lens on another camera, reinstall the pin on its former position.

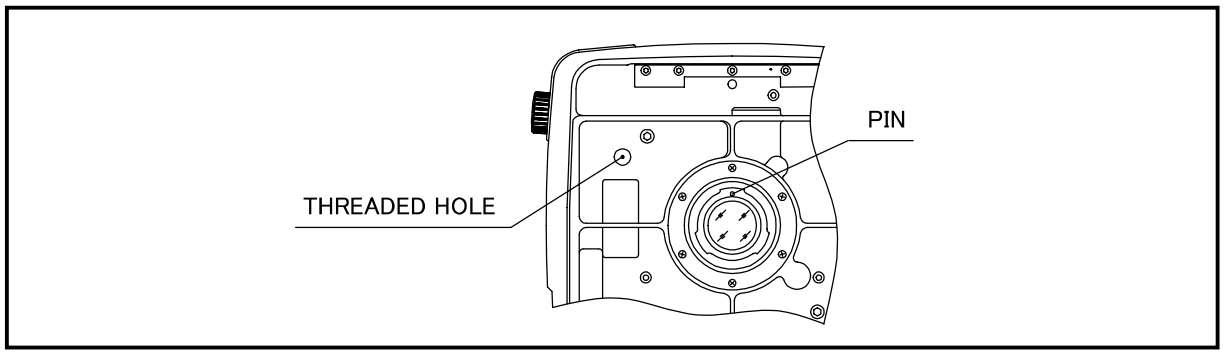

■ Cautions when using the lens supporter

When using this lens with a Fujinon lens supporter (ELH-*) attached, use a power source connecter (see "Name and Function of Each Part") to supply power from the lens side. If power is not supplied, correct operation may not occur.

■ Enclosure of Desiccant

The inside of this lens is able to enclose desiccant in order to eliminate humidity that may mist the surfaces of the internal glasses. A desiccant bag for storage was enclosed in the desiccant enclosure place before shipment at the factory. Prior to use, take out this bag first, and put new desiccant bags in that place as follows:

a. There are twelve desiccant bags in the trunk. Take out one of them to use. The rest should be used when the exchange of the desiccant is required.
b. Loosen the two lens shroud attaching knobs on the both sides of the lens. Draw the shroud towards the front of the lens to detach it from the body.
c. Remove the four screws to take off the lid.
d. Take out the desiccant bag for storage.
e. Fold new desiccant bag and put it in the desiccant enclosure place.
f. Put the detached lid in its place and reinstall the four screws. Finally, reinstall the lens shroud.

Note 1. Perform the above procedure in a dust-free place.

Note 2. In a humid region, it is recommended to change the desiccant bags two times a year. The desiccant being jellied indicates the time when it must be exchanged.

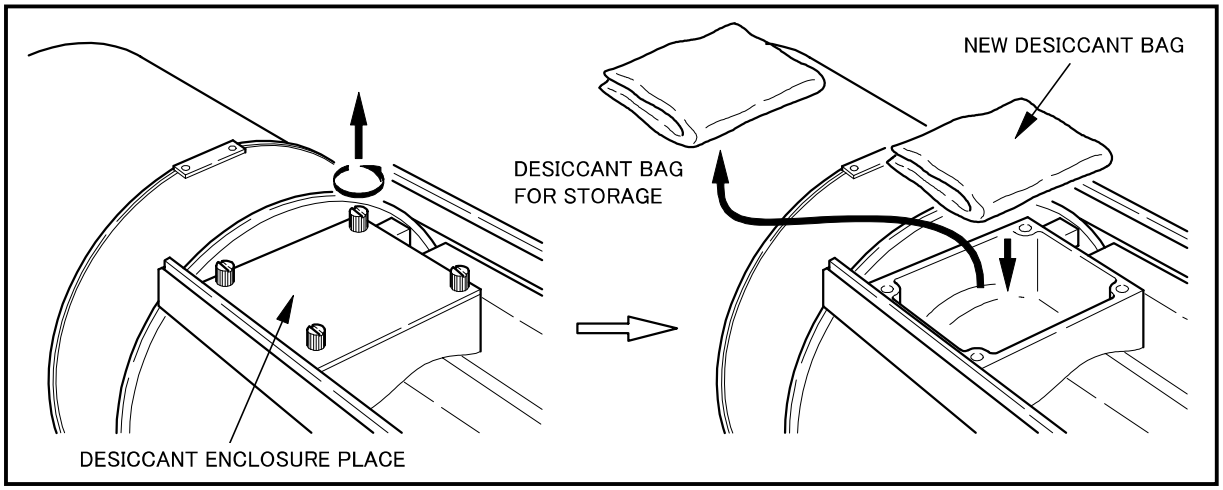

■Selection of Camera

The behavior of the intercom select switch in an accessory differs by types of camera. If required, change the setting of dip switch (S710-7) on the A-board in the lens according to the type of camera.
At the factory, the switch is set to "TYPE 1."
The circuits relative to the dip switch are shown below.

Ⅰ. TYPE 1 CAMERA: BVP-270 series (NTSC) and BVP-370 series (NTSC)

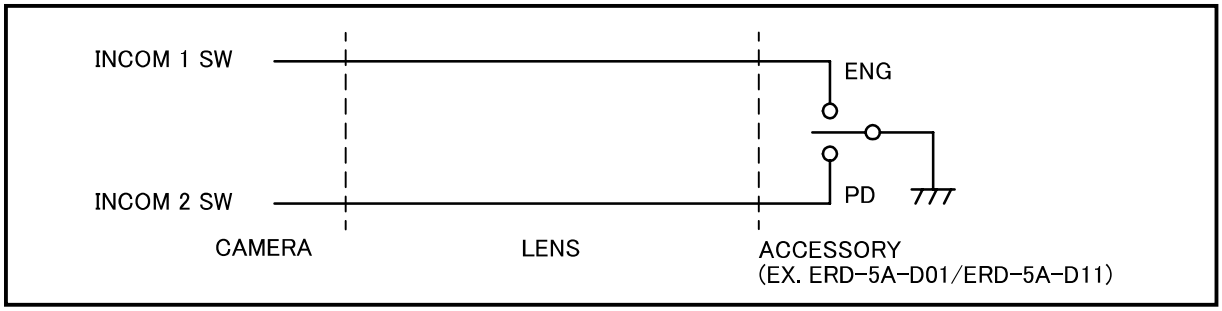

Ⅱ. TYPE 2 CAMERA: BVP-370 series (PAL)

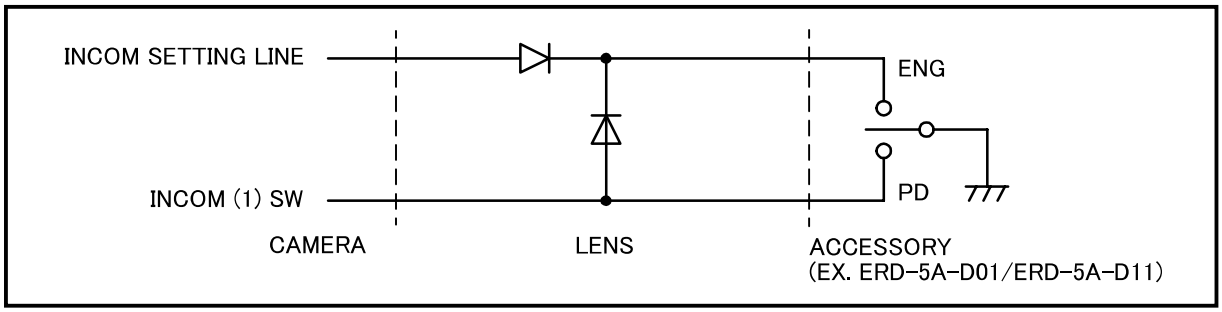

Note. If the camera is of TYPE 2, set the intercom select switch on the camera side to "PD."
At the position of "ENG," "PD" can not be selected from a zoom rate demand unit.

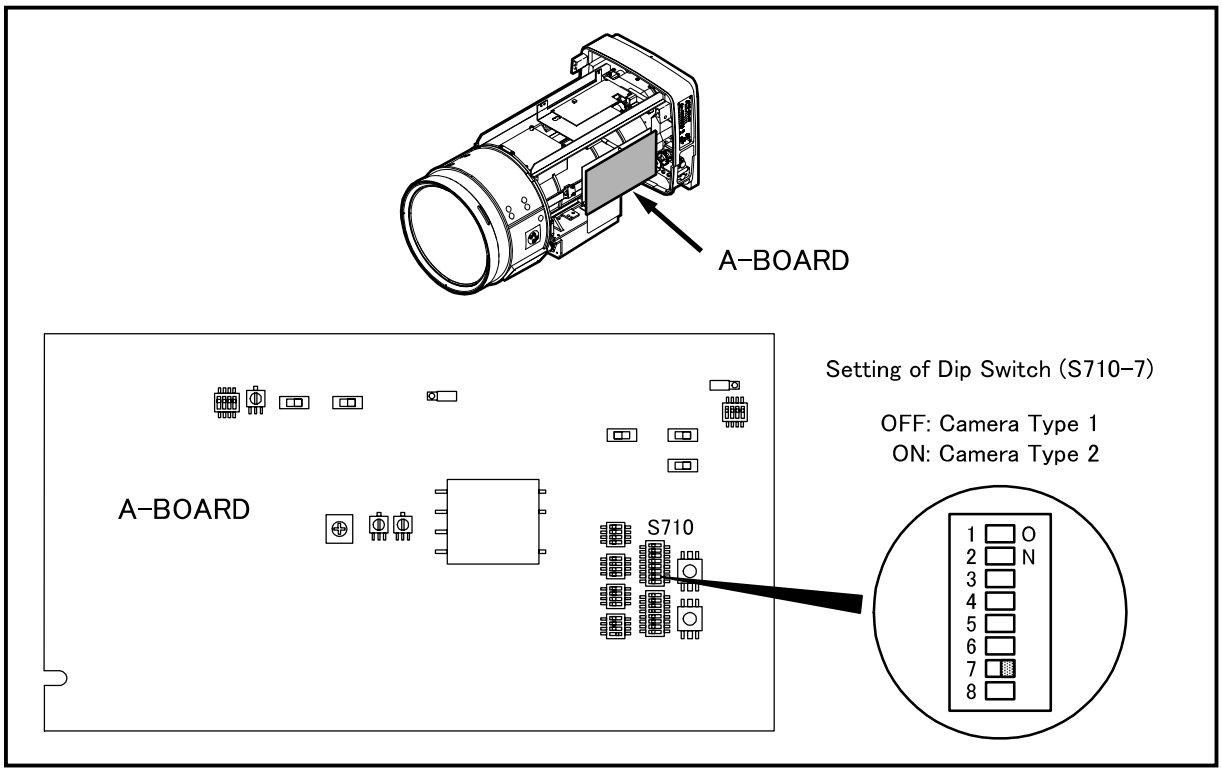

■Setting of Camera Mode

If the camera to be used with is not capable of serial communication with a lens, set the communication mode (camera mode) of the lens to OFF.

Setting Method

First, remove the shroud. The shroud can be removed by pulling it towards the front after loosening the two lens shroud attaching knobs on both sides of the lens.

The switch S703 (on A–board) can be seen on the right–hand side (viewed from front of lens) of the lens by removing the lens shroud. Set this switch to "OFF."

Note. Before shipping at the factory, S703 is set to ON.

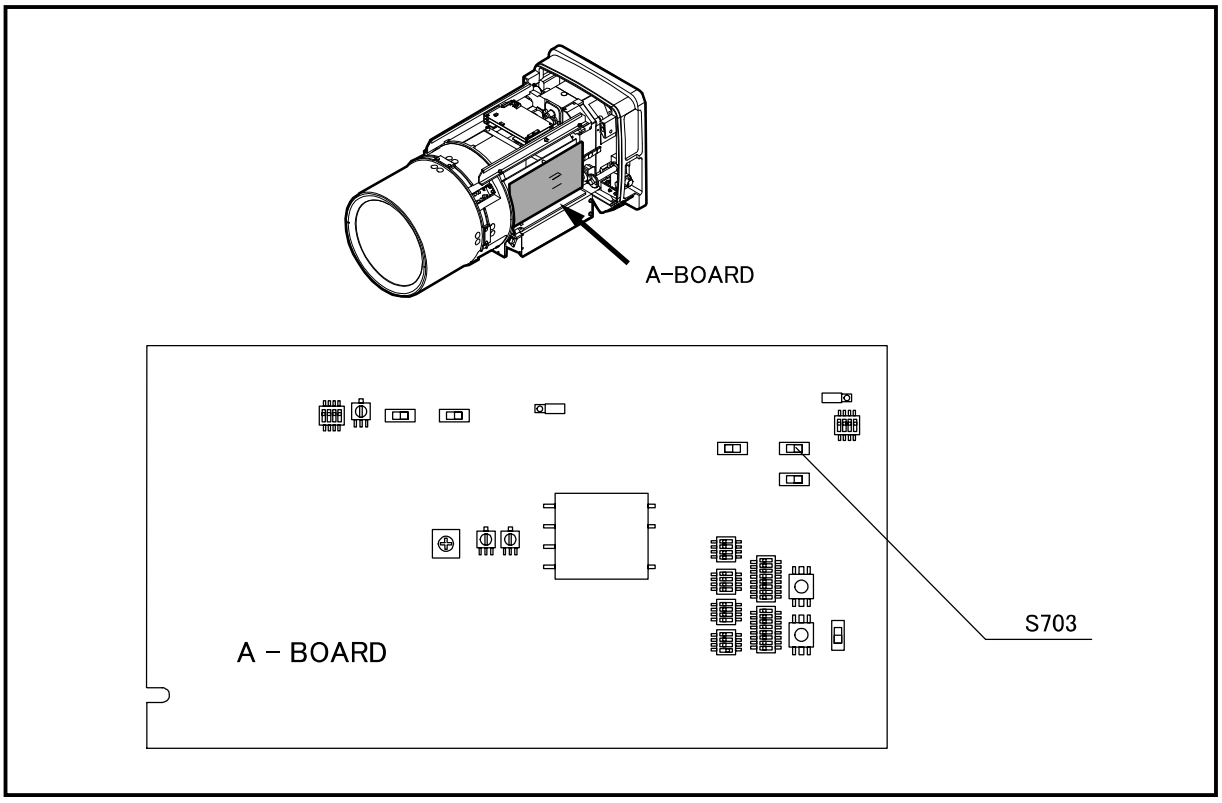

GENERAL DESCRIPTION

Fujinon TV lens of UA27 × 6.5 series is a high performance zoom lens designed for 2/3″ format 4K-UHD TV.

This lens embodies 27 times zoom ratio consistent with a focal length of 6.5 mm at wide end.

This lens is a digitally controlled by a high performance processor.
By performing high-speed digital processing, each part of the lens is controlled with high precision.
In addition, this lens can be controlled with an external controller or computer using the RS - 232C interface.

LIST OF COMPONENTS

■Standard Components

- Lens package····· 1
- Front lens cap····· 1
- Rear lens cap····· 1

SPECIFICATIONS

ITEM \ LENS	UA27×6.5BESM-E35
Application	2/3" Format Color Camera (Prism Optical System)
Aspect Ratio	16 : 9
Image Format	9.59 × 5.39 mm (φ11.0 mm)
Focal Length	6.5 ～ 180 mm [13 ～ 360 mm] *1
Zoom Ratio	27×
Maximum Relative Aperture (F No.)	F1.5 (6.5 ～ 123 mm) ～ F2.2 (180 mm) [F3.0 ～ F4.4]
Iris Range	F1.5 ～ F16、Closed
Flange Focal Length (in Air)	See Fig. 1.
Minimum Object Distance (from Front of Lens)	0.6 m (0.05m in Macro Operation)
Field Angle (H×V) at Wide End at Tele End	72°50'×45°02' [40°30'×23°25'] 3°03'×1°43' [1°32'×0°51']
Object Area at M.O.D. at Wide End at Tele End	1063×597 mm [529×297 mm] 38× 21 mm [20× 11 mm]
Operation range of tilt	±45°
Iris Control	Servo
Zoom Control	Servo (Min. Op. Time: Approx. 1 s *2)
Focus Control	Servo (Min. Op. Time: Approx. 0.8 s) or Manual
Mount	See Fig. 1.
Power Consumption (at 12V DC)	3.6 W (Quiescent) 25 W (Maximum)
Mass	22.8 kg (Approx.)

*1 The values in the brackets are given when the 2× range extender is used.

*2 With the zoom high speed servo module, the minimum operating time is about 0.6 sec.

NAMES AND FUNCTIONS

Note. The encircled numbers indicate the numbers in the outline drawing (Fig. 1).

① Tally Lights (2 places)

② Handles (2 places)
To carry this lens, hold these handles with both hands.

③ Shroud Attaching Knobs (2 places)
The knobs to fix the lens shroud to the body of the lens.

④ Zoom, Iris, Extender Indicator
This indicator shows the present positions of the zoom, iris and extender.

⑤ Extender Remote/Manual Select Switch
To select the extender manually, set this switch to "MANU."
To select the extender by means of a remote control unit such as a range selector, set this switch to "REMO."

⑥ Indicator ON/OFF Select Switch
Operation of this switch can select ON or OFF of "Zoom, Iris, Extender Indicator."

⑦ Extender Select Knob
The extender manual selection is performed by means of this knob.

⑧ Hood
This hood prevents the extra light from entering the lens.

⑨ Servo Modules (2 places)
To control the lens with servo control units, install servo modules.

⑩ Focus Manual Module (for Focus Control)
To control the lens with manual control units, install manual modules.

⑪ RS-232C Connector
In either self-diagnosis operation using a Fujinon Find System or remote-control operation using a computer, the communication with a computer can be made through this connector. The RS-232C connecter is located inside the lens. When it is required to control the lens using a personal computer, detach the partial cover under the connector.
The cover can be detached by removing the four screws that attach the cover.
(For the lens control protocol, contact the sales agent from which you purchased the lens.)

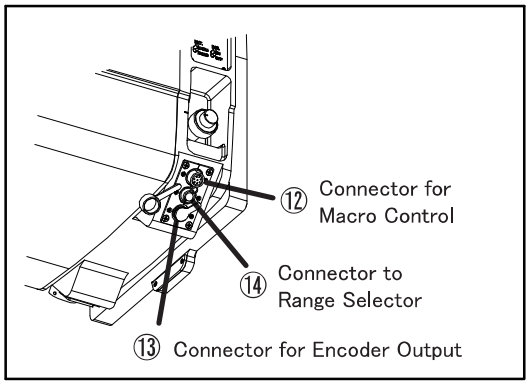

⑫ Connector for Macro Control
This connector is provided for a macro control unit.

⑬ Connector for Encoder Output
The connector for outputting digital signals derived from the iris, focus, and zoom encoders.
For the output signal, refer to section "Specifications of Encoder Output Signal" on page 12.

⑭ Connector to Range Selector
This connector is provided for either a range selector or an iris control unit.

⑮ F.f Adjusting Knob

The flange focal length of the lens is adjusted by means of this knob.

⑯ F.f Locking Knob

This knob secures the F.f adjusting knob.

⑰ Bayonet Mount

The bayonet type mount used in installation onto a portable camera.

⑱ Pin

In installation of the lens, align this pin with the appropriate hole in the mounting surface of the camera or the lens supporter.

⑲ Hook

In installation of the lens, hang this hook on that on the mounting surface of the camera or the lens supporter.

⑳ Pin

In installation of the lens onto a portable camera, align this pin with the hole in the mounting surface of the camera.

㉑ Spring Pin

In installation of the lens, this spring pin enters the appropriate hole in the mounting surface of the camera or the lens supporter and prevent shaking of the lens.

㉒ Connector to Camera

The electrical connection with the camera is made through this connector.

㉓ Tally Lights HIGH/LOW/OFF Select Switch

The intensity of illumination of the tally lights can be selected from High or Low intensity.
When the switch is set to OFF, the tally lights go out.

㉔ Connector for Focus, Zoom Control

This connector is provided for a connection cable, one or two ends of which are connected to a focus control unit and a zoom control unit.

㉕ Connector for Power Source

This connector is provided for a DC power source.
If the camera is not able to supply sufficient electric power to the lens, use a DC power source.

CONNECTOR	ITT CANNON (XLR-4-32-F152)
Pin 1	GND (0V)
Pin 2	NC
Pin 3	NC
Pin 4	+12V(+12～+16V), More than 3A

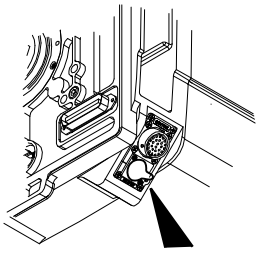

Mount a cap on the power connector towards the horizontal.

㉖ Macro ON/OFF Select Switch

With this switch set to ON, the macro operation (taking a close-up shot) can be performed.

INSTALLATION

Description in this section applies to installation of a lens onto a studio camera.
For installation onto a portable camera, a lens supporter is required. Refer to the operation manual of the lens supporter.

Note 1. Prior to installation, turn off the power of the camera.

Note 2. After installation, when the power of the camera is turned on, the initial settings of the stabilizer mechanism and the main lens are carried out for about ten seconds and several seconds respectively at the same time.
During the setting of the stabilizer mechanism, do not perform panning or tilting operation of the camera; the indicator of the optical stabilizer control unit linked to the lens blinks.
During the setting of the main lens, the operation of the lens cannot be performed. After the setting, the zoom returns to its former position.

⚠WARNING

Be sure to attach all the parts securely. Dropping any parts from a height may cause severe accidents.

■ Installation onto Studio Camera

a. Holding the lens package with both hands, hang the hook at the top rear of the package on the hook at the top front of the camera, and align the pin on the lens mount with the groove in the camera mount.

b. Swing the package down so that the spring pin on the lens mount gets in the hole in the camera mount. In this procedure, the electrical connections, via the connectors on both mounting surfaces, is automatically made.

c. Securely fix the lens package by means of the lens mount locking knob attached to the camera mount.

Note. Make sure to adjust the flange focal length when installing the lens on a camera for the first time or installing it on another camera (refer to the next page for details).

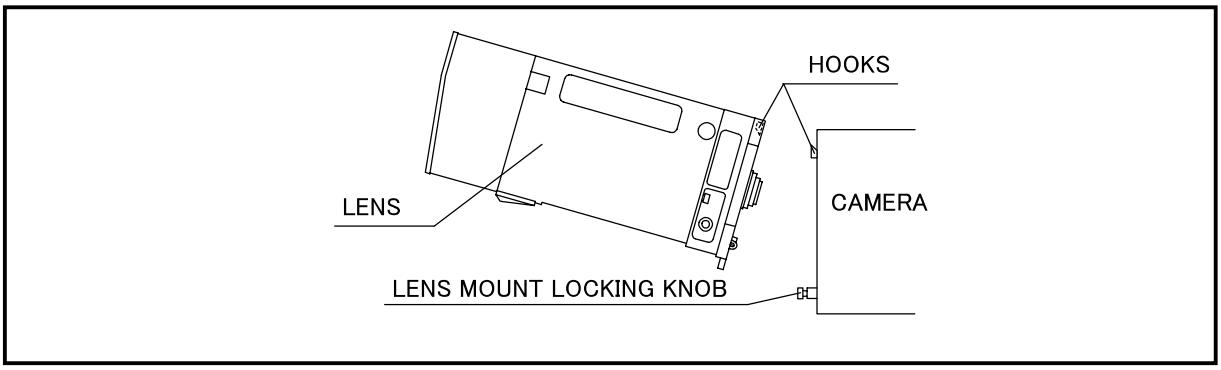

ADJUSTMENT OF FLANGE FOCAL LENGTH

The flange focal length is the distance from the flange (mounting surface) of a lens to the focal plane.

If the focal plane of the lens does not coincide with the image plane of the camera, the object will be out of focus during a zoom operation.
To prevent this from happening, the adjustment of the flange focal length is required.
Make sure to carry out the adjustment when installing the lens to a camera for the first time or installing it to another camera.

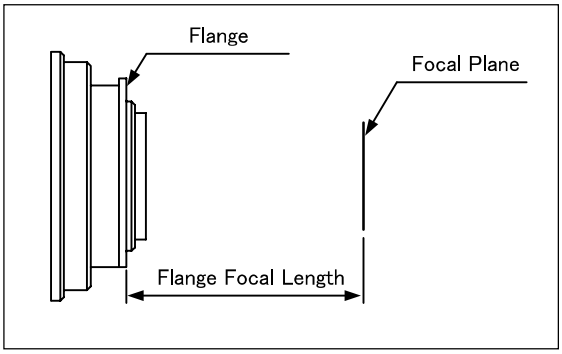

■ Conditions of Object and Iris Position

1. Object : an object that provides clear and easy focusing even at the wide end
2. Object distance : about 7.5m (measured from front glass of the lens)
3. Iris position : maximum aperture or near that condition

■ Adjustment

Note. Before adjustment, set the macro ON/OFF select switch on this lens to OFF. If a remote macro control unit (EA-3A-10A, 11A, etc) is linked to this lens, set the remote macro ON-OFF select switch on the unit to OFF.

Carry out the adjustment observing a monitor.

For the operation of focusing and zooming, refer to sections “Focusing Operation” and “Zooming Operation (pages 11 and 12).

a. Loosen the F.f locking knob by rotating it counterclockwise.
b. At the wide end in the zoom range, focus on the object by means of the F.f adjusting knob.
c. At the tele end, focus on the object by means of a focus control unit.
d. Repeat steps ‘b’ and ‘c’ several times so that the F.f is adjusted completely.
e. Finally tighten the F.f locking knob by rotating it in the direction of the arrow.

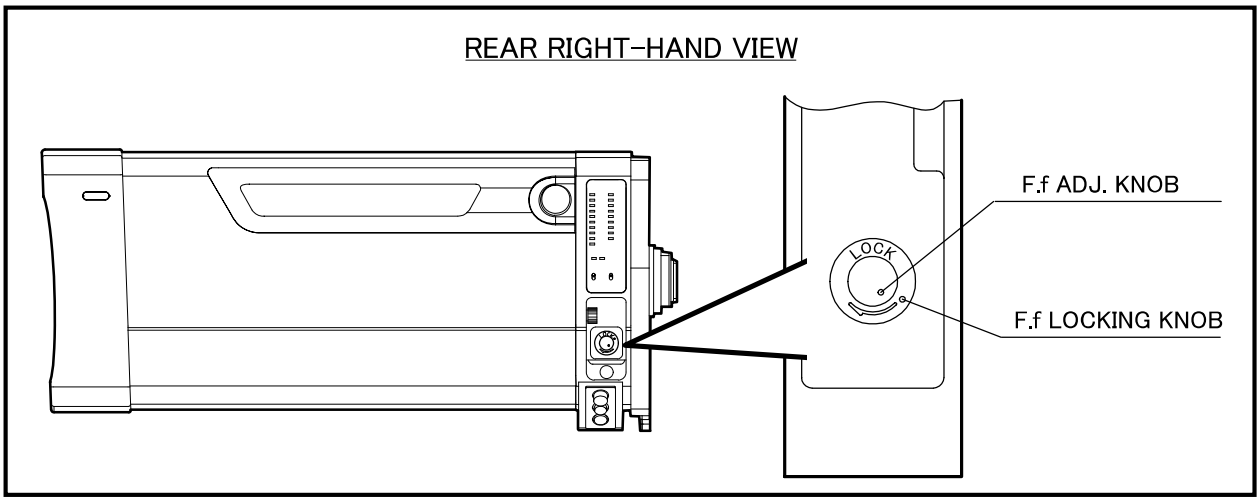

Adjustment by F.f Manual Adjusting knob

The flange focal length adjustment mechanism incorporated in this lens is driven under servo control.
However, even in the case that the power is not supplied to the flange focus length adjustment mechanism for any reason, the adjustment can be carried out using the F.f manual adjusting knob located inside the lens.

a. Remove the shroud.
   The shroud can be removed by pulling it towards the front after loosening the two lens shroud attaching knobs on both sides of the lens.
b. Set the switch SW501 on the F-AMP to OFF.
c. At the wide end in the zoom range, focus on the object by means of the F.f manual adjusting knob.
d. At the tele end, focus on the object by means of a focus control unit.
e. Repeat steps 'c' and 'd' several times so that the F.f is adjusted completely.

Note. Unless the adjustment is performed using the F.f manual adjusting knob, set switch SW501 to "ON".

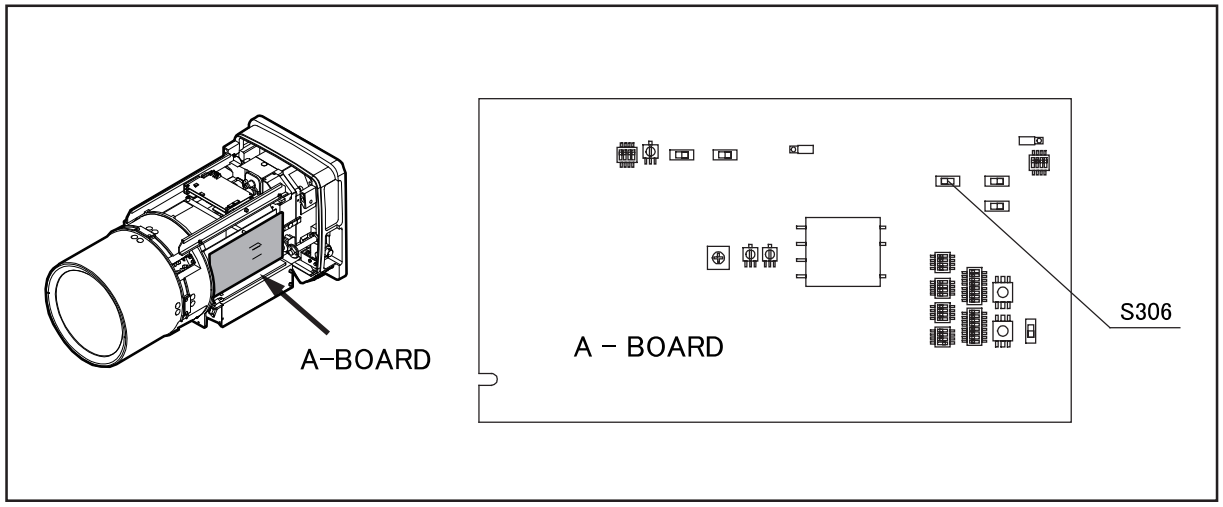

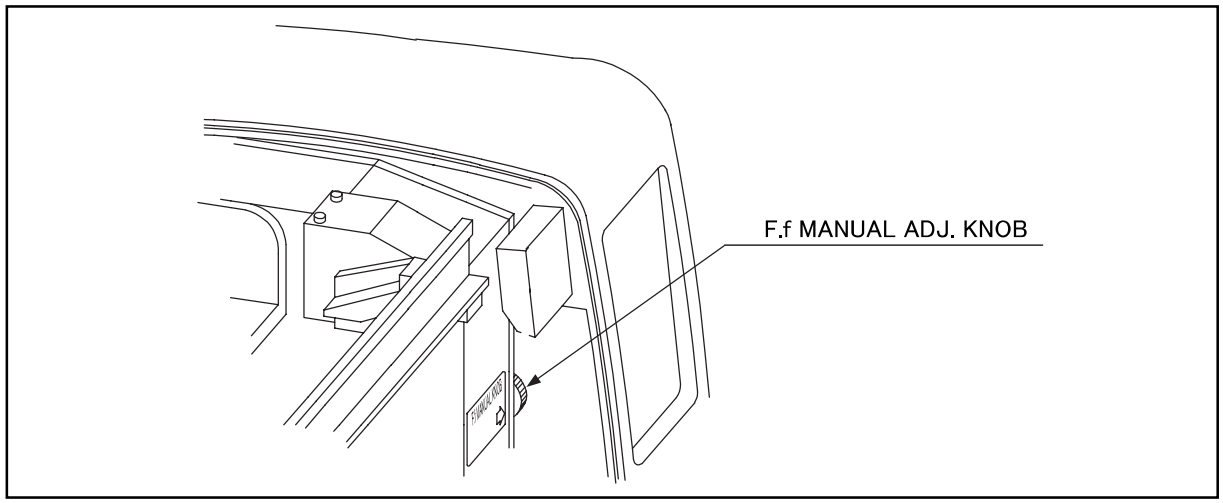

OPERATING INSTRUCTION

⚠WARNING

If the camera is declined by 45 degrees or more, there may be a case that the lens installed on the camera falls.
If it is required to shoot an object with the camera in the posture stated above, before using the camera, a proper measure should be taken on the lens to avoid falling.

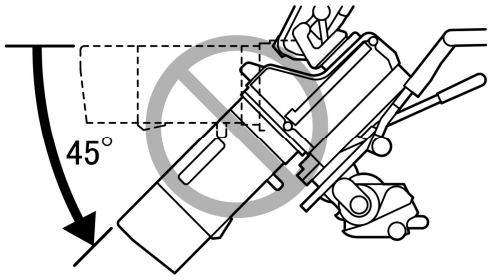

① FOCUSING OPERATION

Focus is controlled by means of a control unit linked with the lens. For operating instruction of a control unit, refer to the operation manual of the control unit.

Control Unit for Servo Operation
- Focus Position Demand Unit·····EPD-*
- Shot Box····· ESB-*

Control Unit for Manual Operation
- Focus Grip····· BFH-*

② ZOOMING OPERATION

Zoom is controlled by means of a control unit linked with the lens. For operating instruction of a control unit, refer to the operation manual of the control unit.

Control Unit for Servo Operation
- Zoom Rate Demand Unit····· ERD-*
- Shot Box····· ESB-*

③ IRIS OPERATION

Iris is controlled by an iris control signal (auto iris or manual) derived from the camera. Iris can also be controlled by means of an iris control unit (EIC-*) linked with the lens. For operating instruction of an iris control unit, refer to the operation manual of the iris control unit.

④ EXTENDER SELECTION

There are two methods of extender selection: "Manual Selection" using the extender select knob on the lens and "Selection by Accessory" using an optional accessory.

■ Manual Selection

a. Set the extender remote/manual select switch on the lens (viewed from front glass side of lens) to "MANU."
b. Rotate the extender select knob on the lens to select the extender.

■ Selection by Accessory

The extender can be selected by means of a range selector or an accessory that has an extender selection switch.

a. Set the extender remote/manual select switch on the lens to "REMO."
b. Select the extender by means of an accessory linked with the lens. For operating instruction of an accessory, refer to the operation manual of the accessory.

⑤ MACRO OPERATION

The macro operation (taking close shot) can be done by means of either a zoom control unit (zoom rate demand unit, etc.) or a remote macro control unit (EA-3A-10A, 11A, etc).

■ Operation by Zoom Control Unit

a. Set the macro ON/OFF select switch on the lens to "ON."
b. Bring the focus to the M.O.D. position, by means of a focus control unit (focus position demand unit, etc.).
c. Focus on the object by means of a zoom control unit.

■ Operation by Remote Macro Control Unit

Note. To perform the macro operation using a remote macro control unit, set the macro ON/OFF select switch on the lens to "OFF."

The macro operation can be done using a remote macro control unit linked with the lens. For operating instruction of a remote macro control unit, refer to the operation manual of it. (With the use of a remote macro control unit, ON/OFF selection of the macro function can be done by means of the unit.)

ADJUSTMENT OF IRIS AMPLIFIER

Depending on matching with a camera, hunting of the iris movement occurs. If it occurs, carry out the Gain Adjustment described below. Use a small screwdriver or similar implement to operate the trimmers.

■ Removal of Shroud

First, remove the shroud. The shroud can be removed by pulling it towards the front after loosening the two lens shroud attaching knobs on both sides of the lens.

■ Gain Adjustment

a. Set the iris control mode to AUTO on the camera side (CCU).
b. Operate the "Gain Adjustment Trimmer" (RV306) on the A-board so that the maximum iris gain is obtained within the range hunting does not occur.

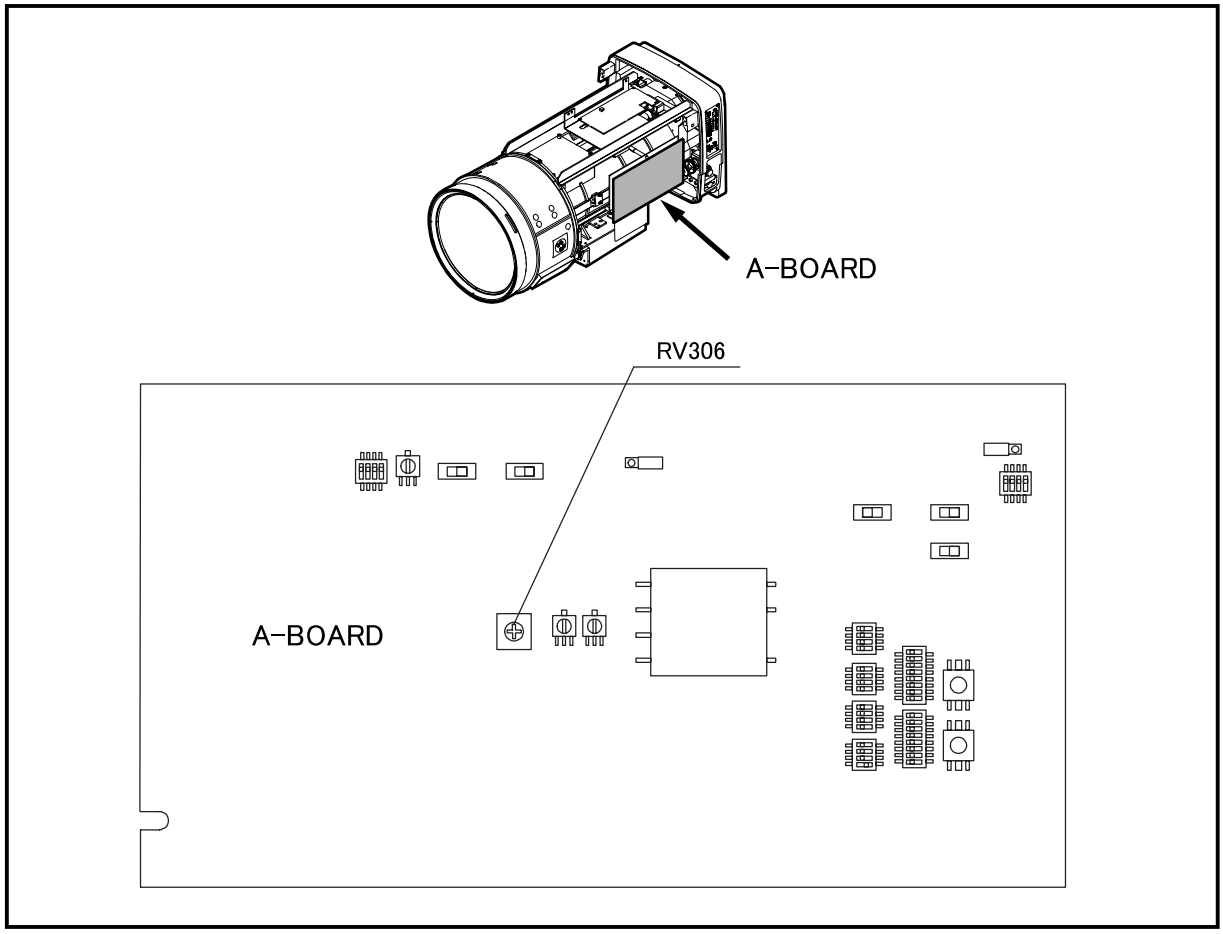

ABOUT FUNCTION OF COMPENSATION FOR CHANGE OF FIELD ANGLE

This lens incorporates a function that compensates for the change of the field angle caused by focusing.

This function can be used, with switch S704 set to “ON.”
(Switch S704 has been set to ON at the factory before shipment.)

This function works when the lens is operated with a digital zoom rate demand unit and a digital or servo focus position demand unit.

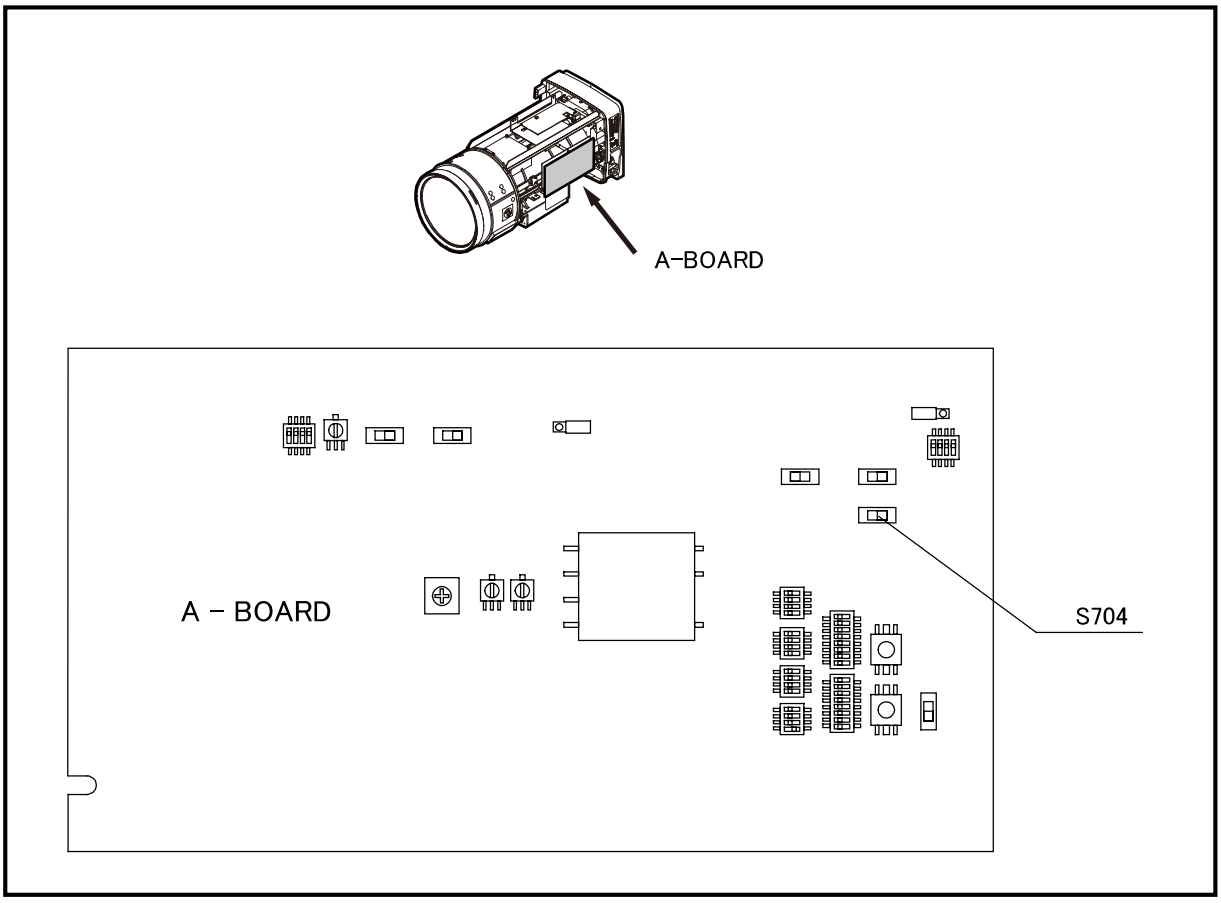

SPECIFICATIONS OF ENCODER OUTPUT SIGNAL

1. Connector HIROSE HR25-9R-20S
2. Pin Assignment of Connector See following table.

Pin Number	Signal
1	N.C.
2	GND (Digital)
3	N.C.
4	+5V (Zo Output Impedance: 1kΩ)
5	N.C.
6	N.C.
7	N.C.
8	Iris Encoder Phase A (H:5V, L:0V)
9	Iris Encoder Phase B (H:5V, L:0V)
10	Zoom Position (W: 2V, T: 7V)
11	Stabilizer ON/OFF Signal (ON: H、OFF: L)
12	Zoom Encoder Phase Z (H:5V, L:0V)
13	Focus Position (N: 2V, F: 7V)
14	Extender Signal (X2: L (Open Collector))
15	Reference Voltage 5.0V
16	Zoom Encoder Phase A (H:5V, L:0V)
17	Zoom Encoder Phase B (H:5V, L:0V)
18	Focus Encoder Phase A (H:5V, L:0V)
19	Focus Encoder Phase B (H:5V, L:0V)
20	Signal GND (Analog)

3. Waveforms of Output Signals

(1) Waveforms of Focus Encoder Output Signals
(when focus moves from inf. side toward MOD side)

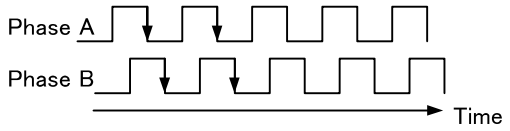

(2) Waveforms of Zoom Encoder Output Signals
(when zoom moves from wide side toward tele side)

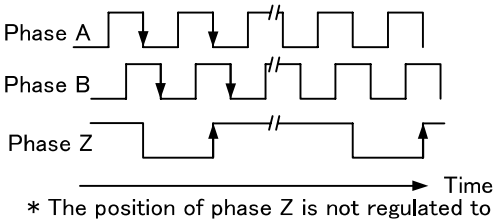

* The position of phase Z is not regulated to that of phase A or B.

(3) Waveforms of Iris Encoder Output Signals
(when iris moves from closed side toward open side)

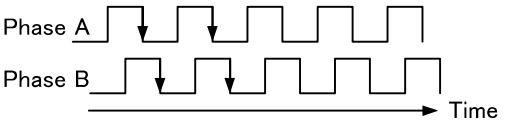

4. Resolution
   - Focus: 16 bits
   - Zoom: 16 bits
   - Iris: 10 bits

MAINTENANCE

① DAILY MAINTENANCE

■ Lens Cleaning

Prepare a mixture of 20% alcohol and 80% ether; soft, clean and lint free cloth or lens cleaning paper.

a. Brush off any dust and dirt from the glass surface with a soft brush.

b. Fold the cloth to a suitable size and moisten it with the mixture.
Lightly wipe the glass surface by moving the cloth in a spiral course from the center to the periphery.

c. If the glass does not come clean for the first time, use another cloth and wipe similarly.
Repeat step 'b' several times until the glass is thoroughly cleaned.

■ Check Connection Cords

Carefully inspect outer covering and terminals for cuts, scratches or other damages.

■ Optional Accessories

When the driving power is achieved by using optional accessories, any meshing part must be normal in shape and free from dust or any other foreign matter. Carefully check all the optional equipment prior to its installation.

Any foreign matter should be removed immediately, and any malformed part should be serviced as soon as possible.

■ Lens Cap

If the lens is left in position on the camera body and the camera is not in use, be sure to place the lens cap (or the hood cap when the lens hood is on) in order to protect the front glass surface of the camera.

② ELIMINATION OF WATER

If the moisture contained in the air is collected in the lens unit, it may produce stubborn soils on the glasses and rust on the metal parts. Remove such moisture in the following manner:

1. Wipe away any moisture that has collected on the outside of the lens unit. Then place the lens unit in a sealed vinyl bag together with a drying agent so that the agent can absorb any moisture that remains.
2. If ample time is available for dehumidifying, leave the lens unit in a dry room after the moisture on the outside of the unit has been removed.

Note. The time required for total drying will vary according to the size of the lens unit, the amount of moisture present and the quantity of the drying agent used. However, it is recommended that the lens unit be left in the bag for at least three hours. A new drying agent should be used for maximum effect.

③ STORAGE OF LENS

After use, wipe the lens clean, and with the lens cap on, place the unit in its storage box.
For safe storage of the lens, avoid hot or humid place, and avoid places containing corrosive gas or salt.
The lens should be occasionally removed and dried if stored for prolonged periods of time.

④ INSPECTION

If an abnormality occurs on the lens, contact the sales agent from which you purchased the lens.

To maintain the high performance for a long term for use, we recommend that a periodic inspection is conducted at least once a year.

Note that we may not be able to inspect and repair our products that have been remodeled on the user's end.

MEMO