FUJIFILM

FUJINON

FUJINON CINE LENS

富士能电影镜头

ZK2.5x14-SAF(B)/SAM(B)
ZK4.7x19-SAF(B)/SAM(B)
ZK3.5x85-SAF(B)/SAM(B)

取扱説明書

Operation Manual

使用手册

富士フイルム株式会社
FUJIFILM Corporation
富士胶片株式会社

BB00038386-100
LP700-702-SAF/M 2808

ENGLISH VERSION

◆ This operation manual is composed of the Japanese version, English version, Chinese version, and Technical Drawings.

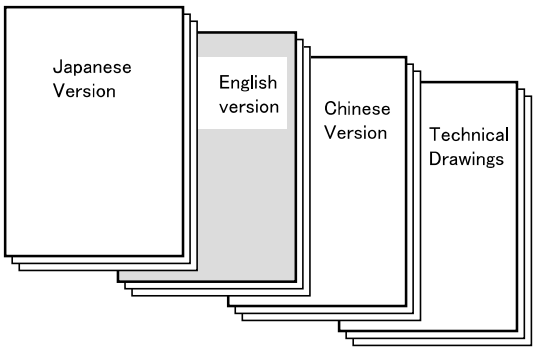

FCC REGURATIONS

This device complies with part 15 of the FCC Rules. Operation is subject to the following two conditions: (1) This device may not cause harmful interference, and (2) this device must accept any interference received, including interference that may cause undesired operation.

Note: This equipment has been tested and found to comply with the limits for a Class B digital device, pursuant to part 15 of the FCC Rules. These limits are designed to provide reasonable protection against harmful interference in a residential installation. This equipment generates, uses and can radiate radio frequency energy and, if not installed and used in accordance with the instructions, may cause harmful interference to radio communications. However, there is no guarantee that interference will not occur in a particular installation. If this equipment does cause harmful interference to radio or television reception, which can be determined by turning the equipment off and on, the user is encouraged to try to correct the interference by one or more of the following measures:

- Reorient or relocate the receiving antenna.
- Increase the separation between the equipment and receiver.
- Connect the equipment into an outlet on a circuit different from that to which the receiver is connected.
- Consult the dealer or an experienced radio/TV technician for help.

CAUTION : Changes or modifications not expressly approved by the party responsible for compliance could void the user's authority to operate the equipment.

Canadian Radio Interference Regulation

CAN ICES 3(B) / NMB-3(B)
CAUTION : This Class B digital apparatus complies with Canadian ICES-003.

Disposal of Electrical and Electronic Equipment in Private Households

In the European Union, Norway, Iceland and Liechtenstein:
This symbol on the product, or in the manual, and/or on its packaging indicates that this product shall not be treated as household waste. Instead it should be taken to an applicable collection point for the recycling of electrical and electronic equipment.



By ensuring this product is disposed of correctly, you will help prevent potential negative consequences to the environment and human health, which could otherwise be caused by inappropriate waste handling of this product.

FOR YOUR SAFETY

This content explains important notices for all the users to use this product safely. Read the content carefully before using, and follow the instructions.

The following signs of ⚠WARNING and ⚠ CAUTION show :

⚠WARNING	Indicates the possibility of causing death or serious injury when misused.
⚠CAUTION	Indicates the possibility of causing injury or substantial damage when misused.

⚠WARNING

- Do not moisten inside of the appliances. It may cause fire or electric shock.
  If the incident occurs, shut off the power supplied to the lens immediately.
- Be sure to attach all the parts securely. Dropping any parts from a height may cause severe accidents.
- Do not look at any sorts of strong illuminant such as the sun through the lens. Eyes could be harmed.

⚠CAUTION

- Take care when carrying the lens. Dropping the lens while carrying may cause injury.
- Be sure to confirm that the camera to be used with the lens system (lens and accessories) is able to supply sufficient electric power to the lens system. If not, the lens system may not work normally and the camera will be damaged.
  The values of the power consumption of the lens and the accessories are described in “Specifications” section of their operation manuals.
- Before supplying the power to the lens, make sure all the parts are connected correctly.
- In order to install or release a cable, be sure to hold the joint part. Do not damage the cable by gripping. It may cause fire or electric shock.
- If any sorts of incidents such as unusual smoke, noise, smell or obstacles are found, shut off the power supplied to the lens and detach the lens from the camera immediately. Please notify the sales agent from which you purchased the product.
- Do not remodel the instrument: it may impair the functions of product or cause electric shock.

NOTICE

- Lens and its accessories are extremely precise instrument, then be sure not to apply the strong impacts to them. If the lens is of a type in which the rear lens protrudes from the flange surface of the lens mount, be sure not to apply impact to the lens part when installing or releasing.
- There may be a case that the glasses of the lens mist when the lens is carried from a cool place to a place of high temperature and high humidity. To avoid a mist on the glasses, before moving the lens, let the lens adjust to the ambient temperature of the place where the lens will be used.
- Be sure not to apply impact to the front part of the lens when operating the camera.
- Put the cap on the lens while the camera is not used.
- If an accessory to be attached to the lens is equipped with a mechanical drive relaying part, before attaching it, check the joint part and get rid of all obstacles. If there are any unusual conditions, please contact the sales agent from which you purchased the product.
- When the lens is used in the weather of fog, raining, or snowing, cover up the lens to prevent it from the water.
- To minimize the impact to the lens in transportation, set the zoom to the wide end and the focus to the infinity side end before releasing the lens from the camera.
- In the case the lens is used without the drive unit (drive unit is detached from lens barrel), if the lens is inclined by more than 45 degrees, the zoom ring might rotate under its own weight. Please have it in mind.
- In the case the lens is used with the drive unit attached to the lens barrel, if the iris ring is rotated using an external motor, the drive unit may be broken. So, when using an external motor, detach the drive unit before using the external motor. For the method of detachment, see the “REMOVAL AND MOUNTING OF DRIVE UNIT” section in this manual.

INITIALIZATION WHEN POWER OF LENS IS TURNED ON

After the power for the lens is turned on, the lens must be initialized.

- The focus and zoom setting methods vary depending on the status of the respective servo/manual select knobs of focus and zoom of the lens when the power is turned on.

  ① When the knob is set to “Servo”:
  Both focus and zoom are automatically initialized.

  ② When the knob is set to “Manual”:
  Focus and zoom are initialized by turning each ring manually.
  When using a communication function such as LDS, always perform initialization. See the following table for the details of the initialization method.

- The iris setting method differs depending on the setting of the lens “function/mode changeover switch SW 1-④”when the power is turned on, regardless of the setting of the iris mode changeover switch.
  (Refer to Page 15.)

  ① When set to ON:
  Initialization is automatically performed.

  ② When set to OFF:
  Initialization is performed by manually turning the iris ring.
  When using a communication function such as LDS or controlling the iris from an external device, be sure to perform initialization.

Setting of Servo/Manual Select Knob / Section of Lens	①Servo (Auto)	② Manual
Focus	The focus operates and is initialized automatically.	By turning the focus ring manually by about 60 degrees, the focus is initialized*1. (Turn the ring within a two-second period.)
Zoom	The zoom operates and is initialized automatically.	By turning the zoom ring manually by about 90 degrees, the focus is initialized*1. (Turn the ring within a two-second period.)

Setting the lens function/ mode changeover switch / Lens Components	① ON	② OFF
IRIS	The iris operates and initialization is automatically performed.	Initialization is performed by manually turning the iris ring approx. 45° . *2 (Turn the ring so that it moves between the open end and the close end within two seconds.)

*1 If the servo / manual select knob is set to servo in a state where the ring has not been turned to the specified angle and initialization is therefore not performed, focus / zoom starts initializa-tion automatically.

*2 If the ring has not been turned to the predetermined angle and initialization has not been performed, turning ON the lens function/mode changeover switch SW 1 ④ causes the iris to automatically start initialization.

MEMO

TABLE OF CONTENTS

- TABLE OF CONTENTS 1
- General Description 2
- List of Components 2
- Installation 4
- Adjustment of Flange Focal Length 5
- Iris Operation 6
- Focus Operation 7
- Zoom Operation 8
  - (1) Manual Operation 9
  - (2) Operation by Zoom Seesaw Control Lever 9
  - (3) QuikZoom Operation 10
  - (4) Auto Cruising Zoom Operation 11
- Macro Operation 12
- Other Functions 13
- Connector pin assignments 14
- About Function & Mode Select Switches 15
- Iris Adjustment 18
- Removal and Mounting of Drive Unit 19
- Changing Focus Ring and Adjustment of Optical Axis 22
  - (1) Changing Focus Ring 23
  - (2) Adjustment of Optical Axis 24
- Maintenance 25
- Specifications 26

■ ILLUSTRATIONS

Fig.	1-1	Outline drawing	ZK2.5×14-SAFB / ZK2.5×14-SAMB
Fig.	1-2	Outline drawing	ZK4.7×19-SAFB / ZK4.7×19-SAMB
Fig.	1-3	Outline drawing	ZK3.5×85-SAFB / ZK3.5×85-SAMB

Note. The products shown in the illustrations in this manual may differ from their actual shapes.

GENERAL DESCRIPTION

A zoom lens designed for 35 mm PL mount cameras.

LIST OF COMPONENTS

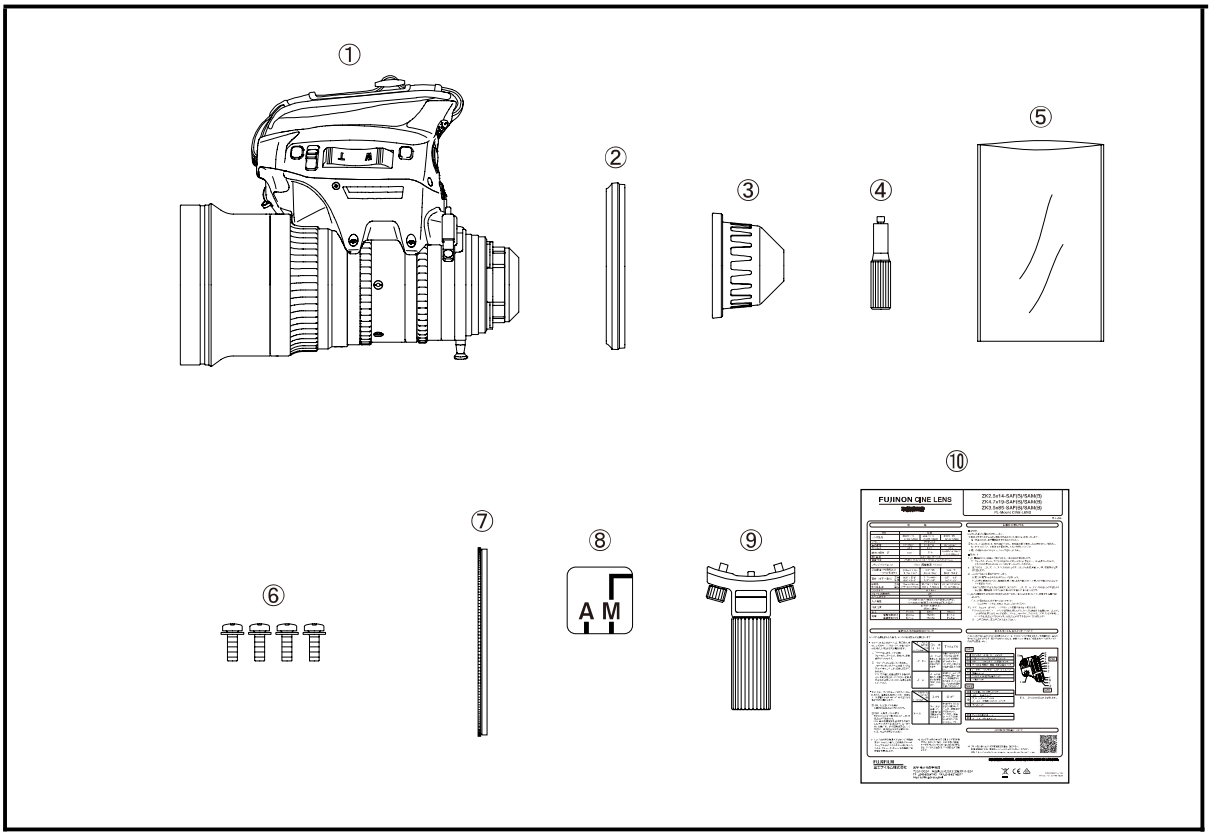

		Q'ty
①	Zoom Lens	1
②	Front Lens Cap	1
③	Rear Lens Cap	1
④	Zoom Lever	1
⑤	Vinyl Bag for Drive Unit	1
⑥	Attaching Screws for Drive Unit (Spare)	4
⑦	Protective Filter	1
⑧	Iris Mode Indication Label	1
⑨	Bracket	1
⑩	Operation Manual	1

* About Bracket

- Bracket is provided for fixing lens onto support rods. Use it either when total mass of lens and attached accessories exceeds 4 kg, or when camera is used on the shoulder and mass of which exceeds 6 kg.
- The supporting screw is detachable from the bracket, so the bracket is available for two types of lens support systems having a different height from each other.

■ INSTALLAION OF THE BRACKET ONTO THE LENS

a. Align the pin at the upper center of the bracket with the hole on the lens, and insert it.

b. The bracket has a mounting screw on both sides. Tighten the screws into the lens.

INSTALLATION OF BRACKET

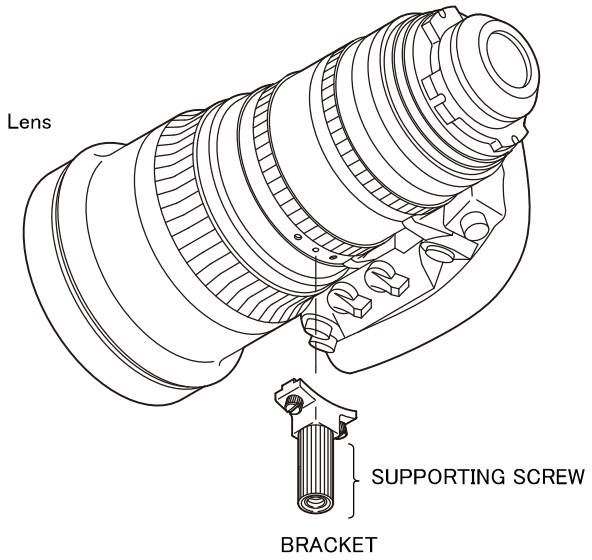

INSTALLATION

■ INSTALLATION ONTO CAMERA

Note. Prior to installation of the lens, turn off the power of the camera and, if used, the external power source.

⚠ WARNING **Be sure to attach all the parts securely.**
Dropping any parts from a height may cause severe accidents.

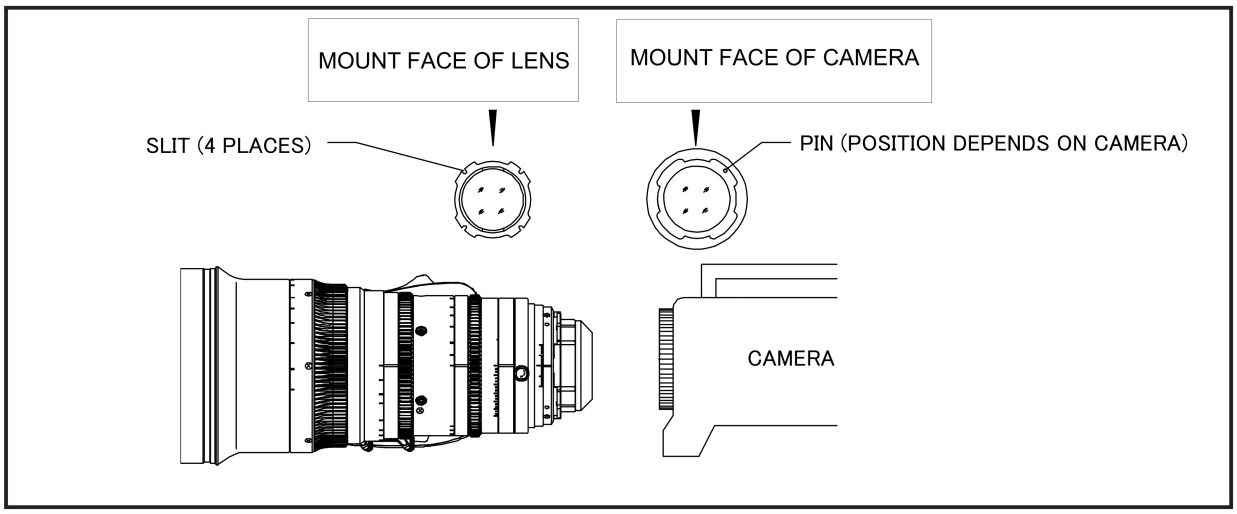

a. Take the rear lens cap off.
b. Rotate the mount clamp ring on the camera fully counterclockwise.
c. Fit the mounting surface of the lens to that of the camera, aligning the pin on the camera with a slot in the lens. (The position of the pin depends on the model of the camera.)
d. Rotate the mount clamp ring fully clockwise.

Note. **Make sure to adjust the flange focal length when installing the lens on a camera for the first time or installing it on another camera (refer to page 5).**

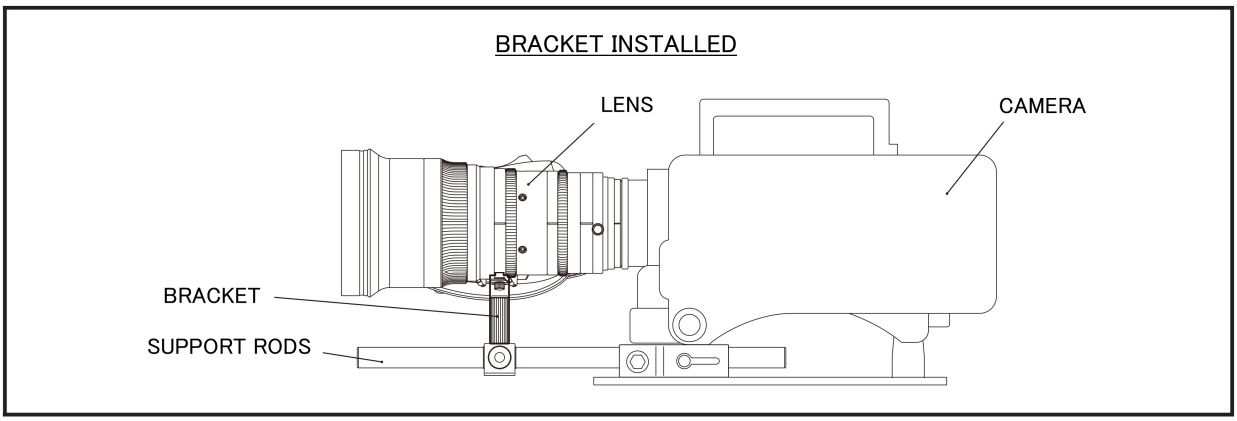

ADJUSTMENT OF FLANGE FOCAL LENGTH

The flange focal length is the distance from the flange (mounting surface) of a lens to the focal plane.

Depending on the camera or conditions such as ambient temperature, there may be a case where the back focus is changed.
If this occurs, perform the adjustment according to the following procedure.

■ CONDITIONS OF OBJECT AND DIAPHRAGM

1. Object — cut out the "Siemens Star" chart at the back of this manual and use it as the object
2. Distance of Object — about 3 meters
3. Diaphragm — open or as near to open as possible

■ ADJUSTMENT

For the operation of focus and zoom, refer to pages 7 and 8.

a. Loosen the F.f locking knob by rotating it counterclockwise.
b. Operate the zoom to set it to the wide end.
c. Rotate the F.f adjusting ring using the F.f locking knob to focus on the Siemens Star located approximately 3 meters away.
   The position where the radial black and white lines become sharpest is the optimum focus position.
d. Operate the zoom to set it to the telephoto end.
e. Operate the focus to bring the object into focus.
f. Operate the zoom to set it to the wide end again, and check that the optimum focus position adjusted in step 'c' is kept.
g. To adjust precisely, repeat the above steps 'b' through 'f' several times.
   (If the most optimum focus position usually holds in all zoom areas, the flange focal length is adjusted precisely. If it is not focused, the flange focal length is not adjusted sufficiently. In this case, start adjusting again from step 'b.')
h. Finally tighten the F.f locking knob firmly.

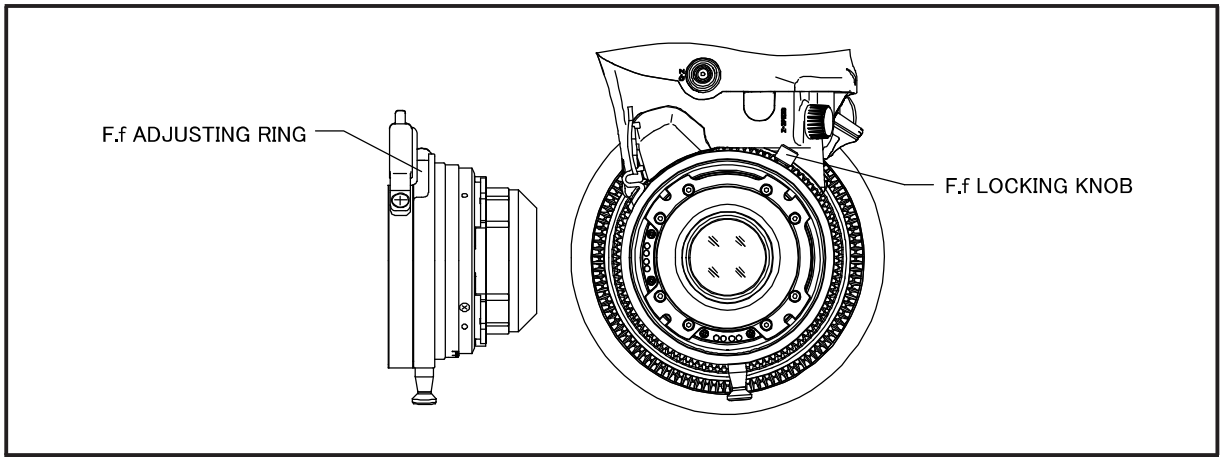

IRIS OPERATION

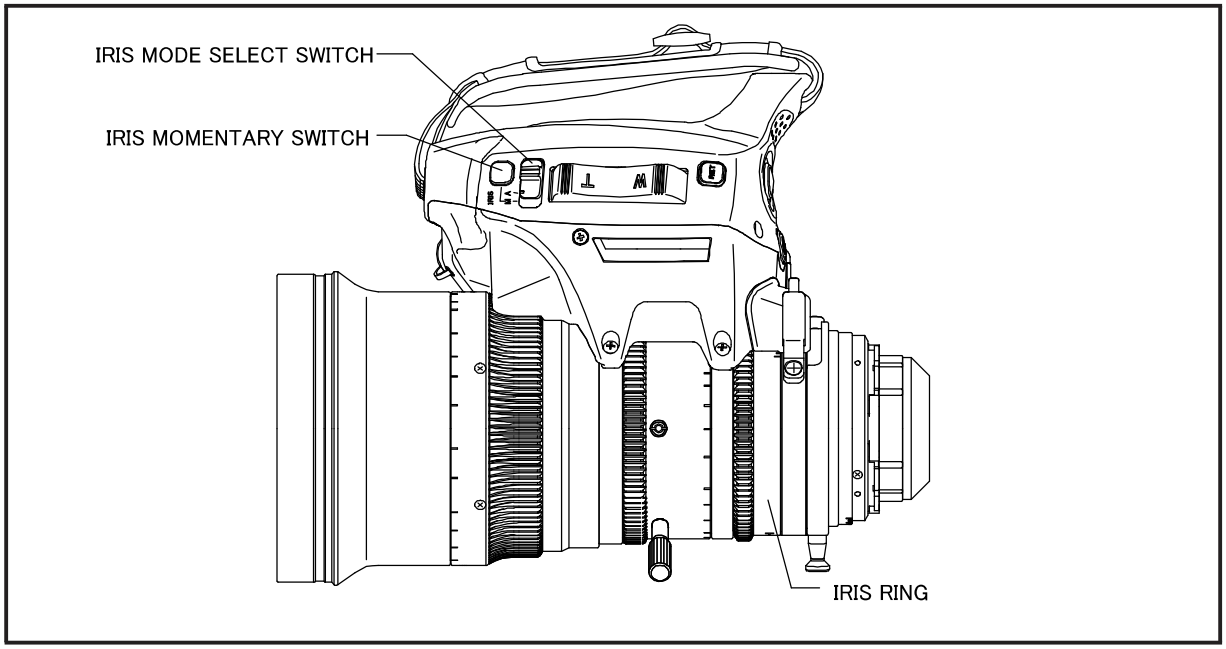

There are two iris operation modes: auto iris mode and manual mode.
For the operating instruction in each mode, refer to the description on each mode.

Note. The auto iris mode only operates if the camera supports this mode. (The auto iris mode may not function normally due to the compatibility with the camera. In that case, use the manual mode.)

■ AUTO IRIS MODE

Set the iris mode select switch to "A." The iris of the lens will automatically be adjusted responding to the object brightness.

■ MANUAL MODE

a. Set the iris mode select switch to "M."

b. Rotate the iris ring by hand to adjust the iris. Clockwise rotation of the ring causes the iris to move toward the closed side and counterclockwise rotation toward the open side.

Note 1. Although the iris operation mode is in Manual, the iris is adjusted automatically while the iris momentary switch is being pressed.

Note 2. The positions of the auto iris mode and the manual mode in the iris mode select switch can be interchanged by setting the iris A-M position change switch (refer to page 15) to ON.
When the positions are interchanged, apply the mode indication label, enclosed with the lens, onto the mode indication part of the lens so as not to cause confusion.

FOCUS OPERATION

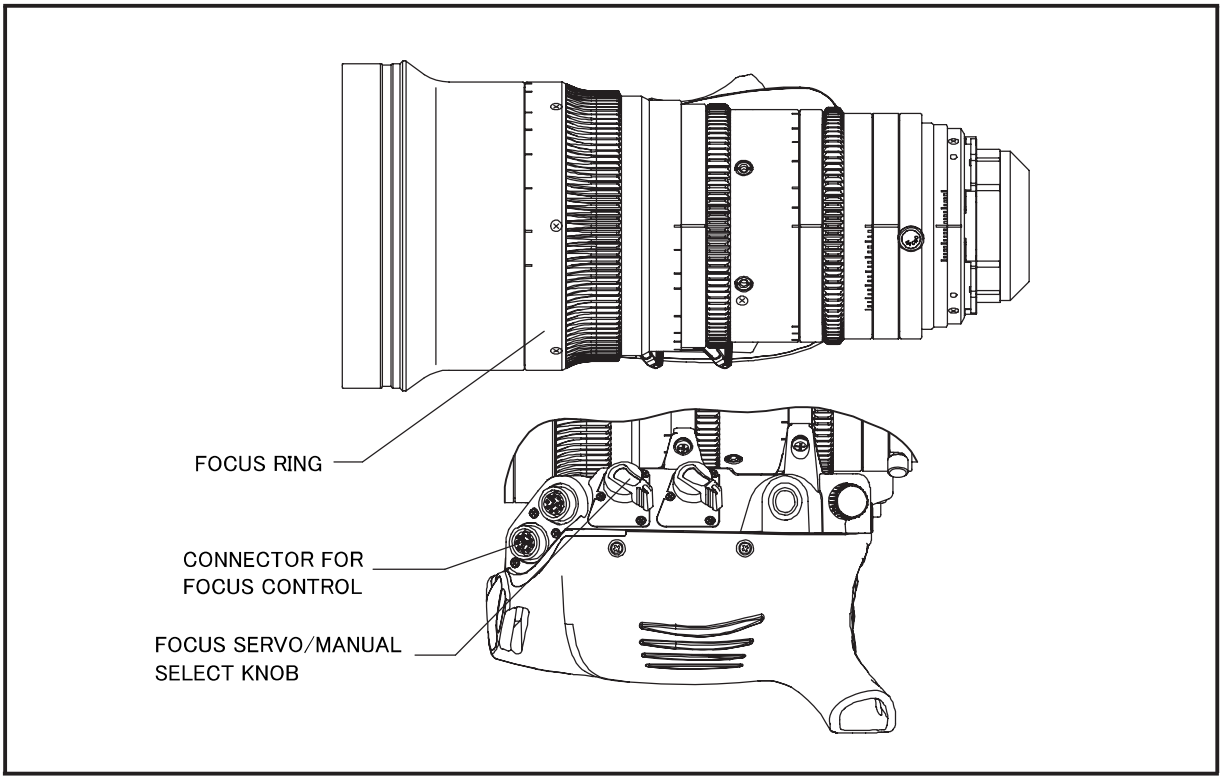

Focusing can be done by directly rotating the focus ring by hand.
Rotate the focus ring clockwise from the camera side to focus on an object on the near side.

The remote control operation is also available with optional accessories.
Set the focus servo/manual select knob to “S,” when using a servo control accessory.

ZOOM OPERATION

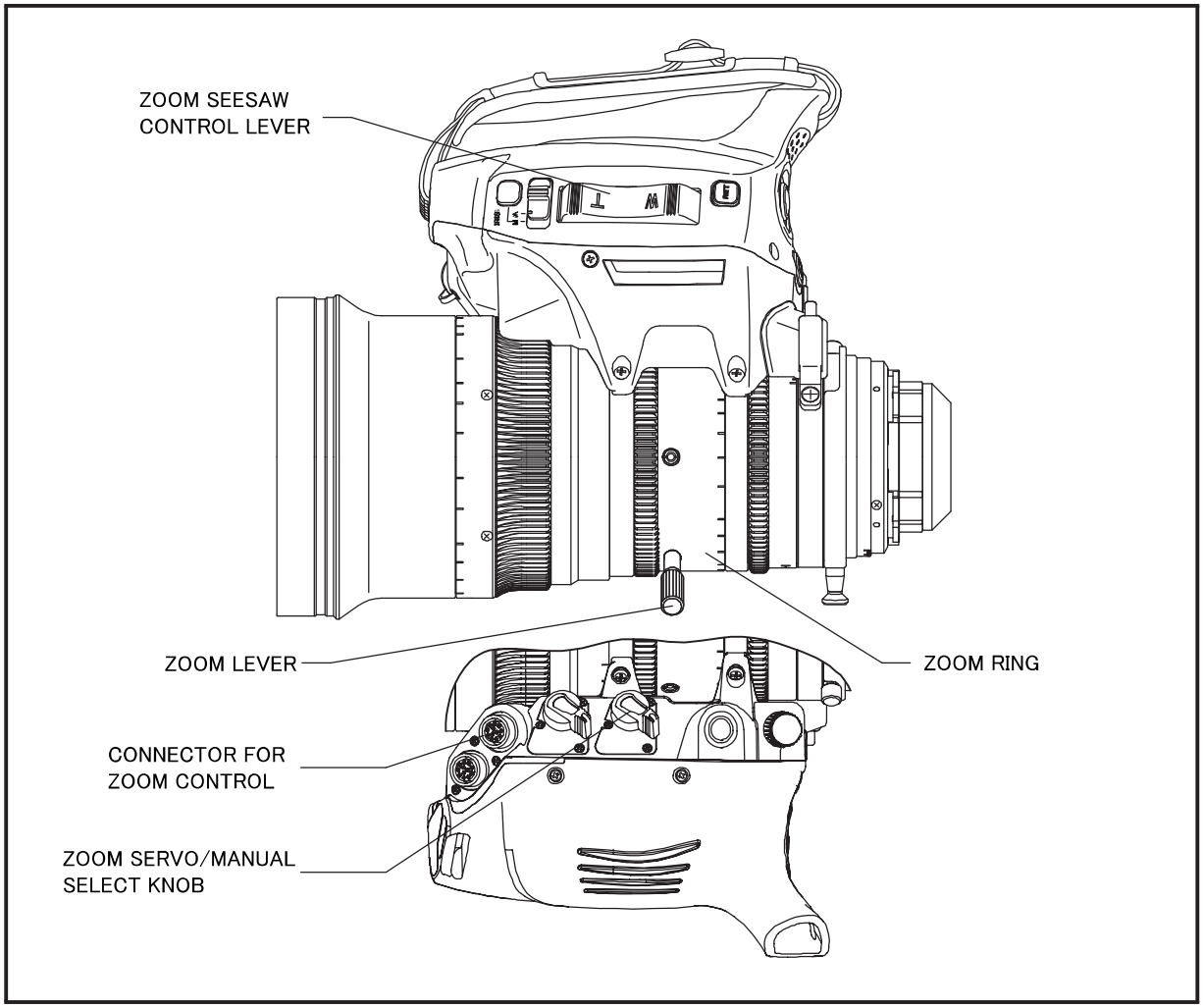

The zoom can be operated in the following four operation modes.

Page

(1) Manual Operation 9

(2) Operation by Zoom Seesaw Control Lever 9

(3) QuikZoom Operation 10

(4) Auto Cruising Zoom Operation 11

For the operating instruction in each mode, refer to the description on each mode.
The remote control operation is also available with optional accessories.

(1) Manual Operation

a. Set the zoom servo/manual select knob to “M.”

b. Rotate the zoom ring directly or using the zoom lever. Clockwise rotation of the zoom ring, viewed from the camera side, moves the zoom to the wide side, and counterclockwise rotation to the tele side. (When rotating the zoom ring directry, it is recommended to remove the zoom lever for smooth operation.)

(2) Operation by Zoom Seesaw Control Lever

a. Set the zoom servo/manual select knob to “S.”

b. Press the zoom seesaw control lever.
Press T-side of the lever to zoom to the tele side, and the W-side to zoom to the wide side.
For the speed control, adjust the strength to press the lever.
Pressing the lever deeply makes the zoom speed faster, and shallowly makes slower.

<Control of Zoom Maximum Speed>

By means of the zoom maximum speed control knob (see the illustration below), the zoom maximum speed can be changed in seven steps. Rotate the knob clockwise to increase the speed.

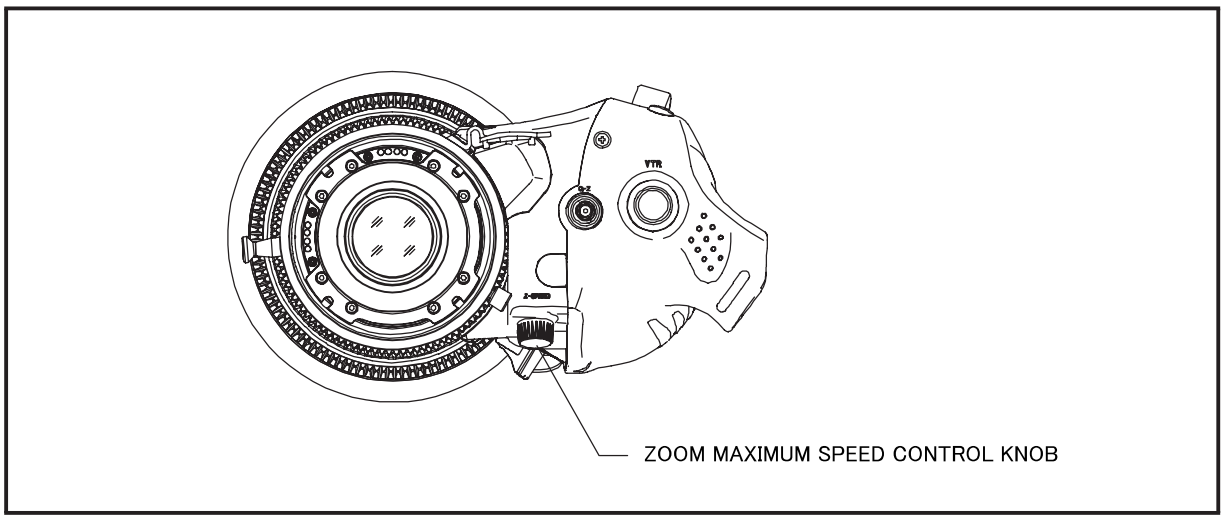

(3) QuickZoom Operation

In quickzoom operation, pressing a switch moves the zoom to the tele end quickly. The operator can use this function in such occasions listed below.

- When rapid zooming to the tele end is required to focus on the object precisely.
- To confirm, in a moment, the composition of the image in the extreme closeup shot.

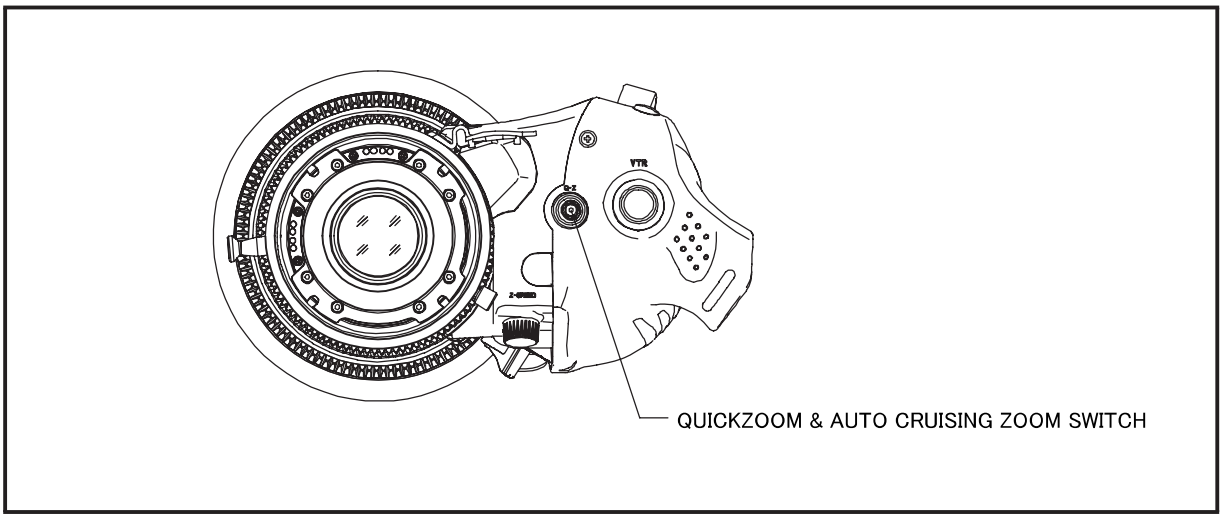

Operation

a. Set the zoom servo/manual select knob to "S."

b. Keep pressing the quickzoom & auto cruising zoom switch until the zoom reaches the tele end.

c. While pressing the quickzoom & auto cruising zoom switch, perform precise focusing or confirm the composition of the image in the extreme closeup shot.

d. Release the quickzoom & auto cruising zoom switch.

— The zoom will move to its former position quickly.

(If you press the quickzoom & auto cruising zoom switch again before the zoom returns to its former position, the quickzoom movement restarts. After this operation, if the switch is released, the zoom will move to its former position quickly.)

Note 1. By setting an appropriate switch in the area of "Function & Mode Select Switches" (see page 15), the return switch and the VTR switch can be used also as a quickzoom & auto cruising zoom switch.

Note 2. In quickzoom operation, the zoom moves at the maximum speed irrespective of the setting position of the zoom maximum speed control knob.

Note 3. If you press the quickzoom & auto cruising zoom switch while pressing the zoom seesaw control lever, the zoom moves in auto cruising zoom operation, not in quickzoom operation.

(4) Auto Cruising Zoom Operation

In auto cruising zoom operation, the zoom moves to the tele end or the wide end at a constant speed. This function is effective when a constant slow zoom speed is required across the zooming range.

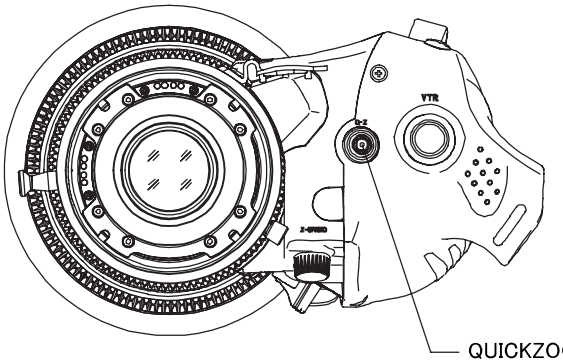

Operation

a. Set the zoom servo/manual select knob to "S."

b. Press the zoom seesaw control lever and adjust the zoom speed.

c. While pressing the zoom seesaw control lever, press the quickzoom & auto crusing zoom switch.
   — The auto cruising zoom function will work.

d. Release your hand from the zoom seesaw control lever.
   — The zoom will move to the tele end or the wide end at a constant speed that is determined when the quickzoom & auto cruising zoom switch is pressed.

Note. By setting an appropriate switch in the area of "Function & Mode Select Switches" (see page 15), the return switch and the VTR switch can be used also as a quickzoom & auto cruising zoom switch.

Releasing

There are three ways to release the auto cruising zoom operation mode.

1. Press the zoom seesaw control lever on the side of the direction of the zoom movement.
   — When the amount of displacement of the zoom seesaw control lever exceeds that determined when the auto cruising zoom operation is set, the auto cruising zoom operation mode will be released. After released, the zoom will move continuously toward the same direction as moved before releasing. (In this way, the auto cruising zoom operation mode can be released maintaining the smooth zoom movement.)
2. Press the zoom seesaw control lever on the reverse side of the direction of the zoom movement.
   — The auto cruising zoom operation mode will be released immediately, and the zoom will move toward the reverse direction.
3. Press the quickzoom & auto cruising zoom switch.
   — The auto cruising zoom operation mode will be released immediately, and the zoom will stop.

MACRO OPERATION

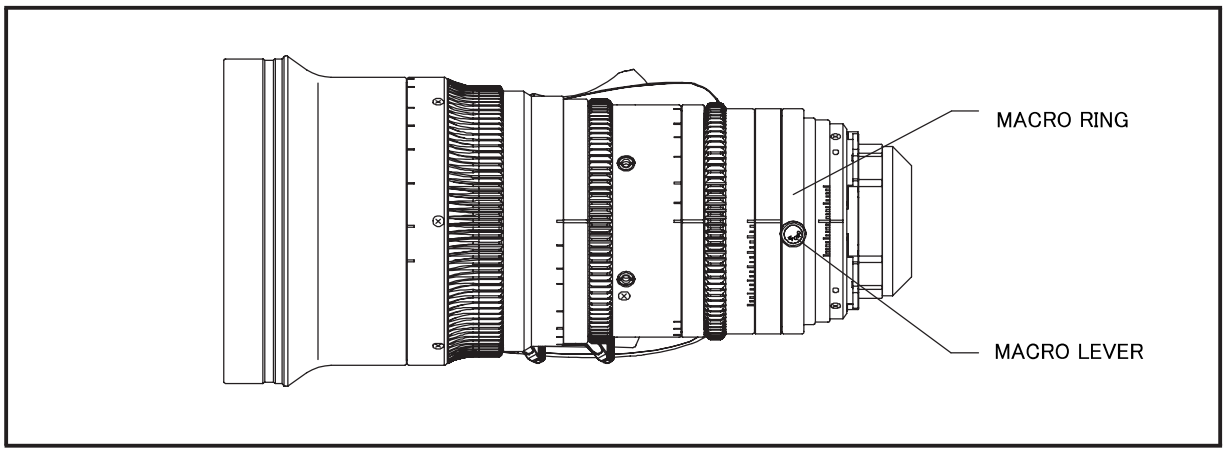

Carry out the following steps for the macro operation (taking a closeup shot).

a. Rotate the focus ring fully toward the M.O.D. side.

b. While pulling the macro lever, rotate the macro ring fully clockwise as viewed from the camera side.

c. Focus the lens by controlling the zoom.

Note. It is also possible to shoot an object while the macro ring is in an intermediate position. In this case, the values of the M.O.D. and the object area at M.O.D. are those of between a normal and a closeup shot.

■ PROCEDURE TO CANCEL

Rotate the macro ring counterclockwise until the macro lever automatically returns to its original position.

OTHER FUNCTIONS

■ VTR Switch

Note. The VTR switch operates only when the camera supports the function of the switch.

Operation of this switch starts or stops the VTR linked to the camera.

Note. If the setting of the function & mode select switches is properly arranged, this switch works as a quickzoom switch or a quickzoom & auto cruising zoom switch.
(refer to page 15)

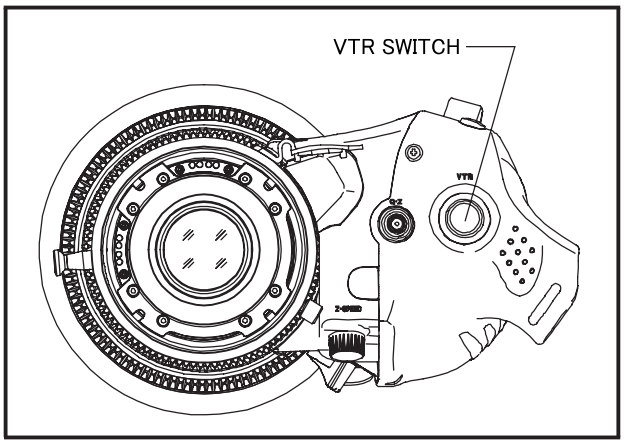

■ Return Switch

Note. The return switch operates only when the camera supports the function of the switch.

While pressing this switch, the return video picture can be seen through the viewfinder of the camera.

Note. If the setting of the function & mode select switches is properly arranged, this switch works as a quickzoom switch or a quickzoom & auto cruising zoom switch.
(refer to page 15)

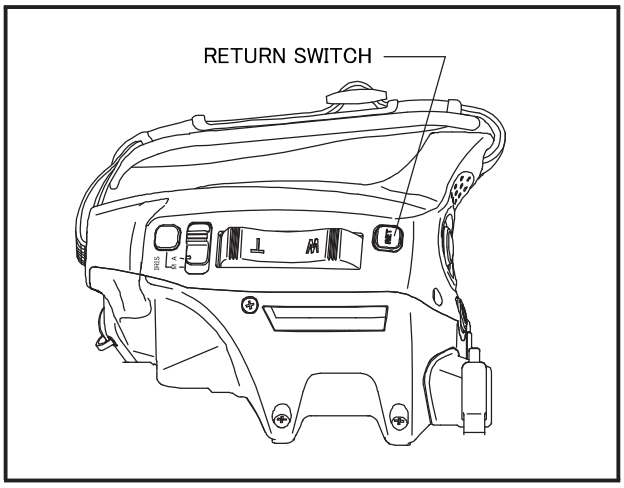

■ Connector for Expansion

This connector can be used in two applications listed below.

(1) To control the lens from a personal computer.

(2) To use the lens in a virtual studio system.
(This connector outputs encoder signals.)

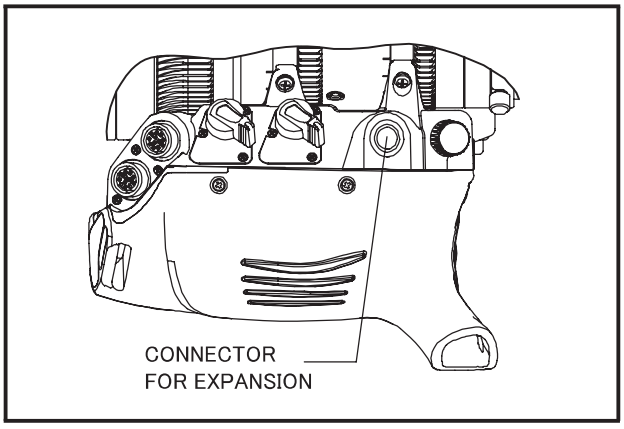

■ Data Interface (ARRI LDS, Cooke /i)

This lens supports both “ARRI LDS” and “Cooke /i” metadata interface with the camera. The choice of which metadata interface can be selected by setting the “LDS, /i select dip switch” (refer to page 15).

CONNECTOR PIN ASSIGNMENTS

The connector pin assignments and functions are listed below.

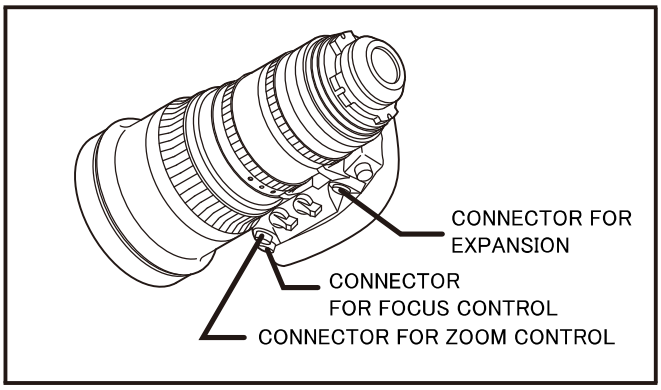

■ CONNECTOR FOR FOCUS CONTROL

HR10G-10R-12S (HIROSE)



	SIGNAL	
1	+V	(+12V DC)
2	GND	GND
3	COM+V	(7.5V DC)
4	COM (5.0V DC)	(5.0V DC)
5	COM-V	(2.5V DC)
6	FOCUS DEMAAND DETECT	(ANALOG DEMAND= +12V , DIGITAL DEMAND = 5V)
7	FOCUS CONTROL	(Far = 7.5V , Near = 2.5V) / RS485 B
8	FOCUS POSITION	(Far = 2.5V , Near = 7.5V) / RS485 A
9	RESERVED	
10	N.C.	
11	N.C.	
12	N.C.	

■ CONNECTOR FOR ZOOM CONTROL

HR10G-10R-12S (HIROSE)



	SIGNAL	
1	+V	(+12V DC)
2	GND	GND
3	COM+V	(7.5V DC)
4	COMMON	(5.0V DC)
5	COM-V	(2.5V DC)
6	ZOOM DEMAAND DETECT	(ANALOG DEMAND= OPEN , DIGITAL DEMAND = 5V)
7	ZOOM CONTROL	(WIDE = 7.5V , TELE = 2.5V) / RS485 B
8	ZOOM POSITION	(WIDE = 2.5V , TELE = 7.5V) / RS485 B
9	VTR SW	
10	VTR SW COM	
11	RET SW	
12	RET SW COM	

■ CONNECTOR FOR EXPANSION

HR25-9R-20S (HIROSE)

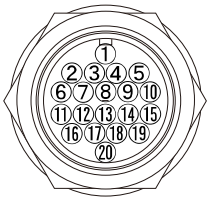

	SIGNAL	
1	+V	(+12V)
2	GND	
3	TxD	(RS-232C)
4	+5V	(1kΩ)
5	DTR	(RS-232C)
6	DSR	(RS-232C)
7	RxD	(RS-232C)
8	IRIS CONTROL	(F2.8 = 6.2V / F16 = 3.4V)
9	VTR SW	OFF＝OPEN / ON＝0V
10	RET SW	OFF＝OPEN / ON＝0V
11	IRIS POSITION	F2.8＝6.2V / F16＝3.4V
12	IRIS AUTO/REMOTE	AUTO＝0V / REMOTE＝5V
13	ZOOM POSITION	WIDE＝2V / TELE＝7V
14	EXT SIGNAL	×2＝L (＜0.5V)
15	TxD (カメラ)	(CAMERA)
16	ZOOM(A)	
17	ZOOM(B)	
18	FOCUS(A)	
19	FOCUS(B)	
20	RxD (カメラ)	(CAMERA)

ABOUT FUNCTION & MODE SELECT SWITCHES

The function of some switches incorporated in this lens can be changed to other functions.
The function can be changed by setting switches in the function & mode select switches.
The function & mode select switches are accessible by removing the round rectangular rubber cap on the front of the drive unit.

FUNCTION & MODE SELECT SWITCHES

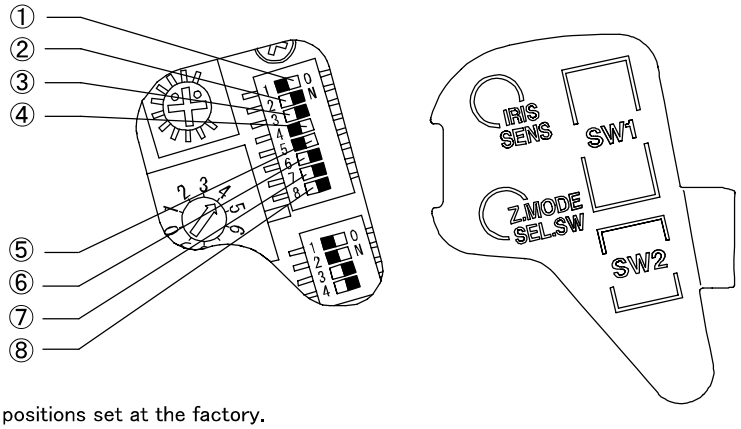

The illustration shows the positions set at the factory.

①	QUICKZOOM ON/OFF SWITCH	⑤	AUTO CRUISING ZOOM ON/OFF SWITCH
②	VTR → QUICKZOOM SELECT SWITCH	⑥	AUXILIARY SWITCH
③	RETURN → QUICKZOOM SELECT SWITCH	⑦	IRIS A-M POSITION CHANGE SWITCH
④	IRIS INITIALIZATION automatic/manual changeover switch	⑧	AUXILIARY SWITCH

① Quickzoom ON/OFF Switch

This switch changes the function of the quickzoom & auto cruising zoom switch to ON and OFF.

② VTR → QuickZoom Select Switch

This switch changes the function of the VTR switch to that of the quickzoom switch.
(The function of the VTR switch incorporated in the zoom rate demand unit or the shot box linked to this lens is also changed to that of the quickzoom switch.)

③ Return → QuickZoom Select Switch

This switch changes the function of the return switch to that of the quickzoom switch.
(The function of the return switch incorporated in the zoom rate demand unit or the shot box linked to this lens is also changed to that of the quickzoom switch.)

④ IRIS INITIALIZATION Automatic/Manual Changeover Switch

This switch switches the mode (automatic or manual) of the iris initialization to be performed when the power supply is turned on. This switch functions as follows, regardless of the setting of the iris mode changeover switch.

- ON : Automatic
- OFF : Manual

⑤ Auto Cruising Zoom ON/OFF Switch

This switch changes the auto cuising zoom function to ON and OFF. If this switch is set to OFF, an auto cruising zoom operation cannot be perfomed from all the switches that are set as an auto cruising zoom switch.

⑥ Auxiliary Switch

An auxiliary switch.

⑦ Iris A-M Position Change Switch

The positions of the auto iris mode and the manual mode set in the iris mode select knob can be interchanged by setting this switch.

⑧ Auxiliary Switch

An auxiliary switch.

FUNCTION & MODE SELECT SWITCHES

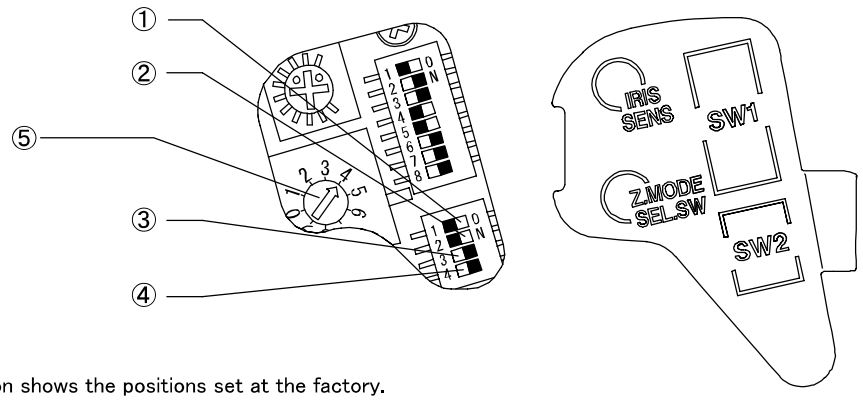

The illustration shows the positions set at the factory.

①	CAMERA COMMUNICATION ON/OFF SWITCH
②	LDS, /i SELECT SWITCH
③	ANALOG ZOOM DEMAND ZOOM MODE FUNCTION ON/OFF SWITCH
④	AUXILIARY SWITCH
⑤	ZOOM MODE SELECT SWITCH

① Camera Communication ON/OFF Switch

This switch changes the function of serial communication with a camera to ON and OFF.

Note. Set this switch to OFF when a malfunction occurs and it is assumed that the malfunction is caused by a serial communication failure.

② LDS, /i Select Switch

The choice of metadata interface with the camera can be selected from "ARRI LDS" or "Cooke /i" by setting this dip switch.

- ON : ARRI LDS
- OFF : Cooke /i

③ Analog Zoom Demand Zoom Mode Function ON/OFF Switch

In a zoom operation with an analog zoom demand control unit, the zoom mode function (function of selecting the characteristics of "zoom speed vs zoom control signal") can be switched to ON and OFF.

④ Auxiliary Switch

An auxiliary switch.

⑤ Zoom Mode Select Switch

The characteristics of "Zoom Speed vs Rotational Angle of Zoom Seesaw Control Lever" can be selected from ten modes. Refer to the following figure.

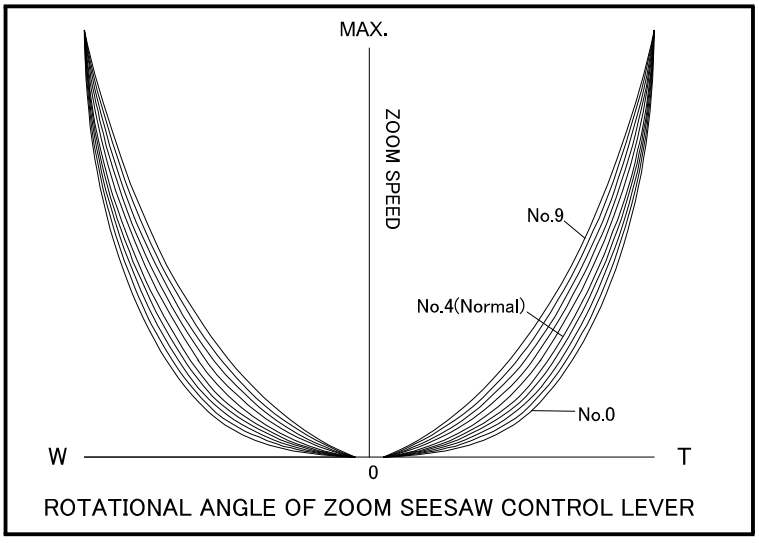

ROTATIONAL ANGLE OF ZOOM SEESAW CONTROL LEVER

■ TABLE OF SWITCH FUNCTIONS

The functions of switches (return switch, VTR switch, quickzoom & auto cruising zoom switch, and iris mode select switch) can be changed to other functions by combination of the settings of the function & mode select switches.
Refer to the following tables.

◎ Return Switch

Settings of Function & Mode Select Switches		Function of Return Switch
Sw1-3	Sw1-5	
RET→Quickzoom	Auto Cruising Zoom ON	
OFF	—	Return switch
ON	ON	Quickzoom & Auto Cruising Zoom switch
ON	OFF	Quickzoom switch

◎ VTR Switch

Settings of Function & Mode Select Switches		Function of VTR Switch
Sw1-2	Sw1-5	
VTR→Quickzoom	Auto Cruising Zoom ON	
OFF	—	VTR Switch
ON	ON	Quickzoom & Auto Cruising Zoom switch
ON	OFF	Quickzoom switch

◎ QuickZoom & Auto Cruising Zoom Switch

Settings of Function & Mode Select Switches		Function of QuickZoom & Auto Cruising Zoom Switch
Sw1-1	Sw1-5	
Quickzoom ON	Auto Cruising Zoom ON	
ON	ON	Quickzoom & Auto Cruising Zoom switch
OFF	OFF	Does not function
ON	OFF	Quickzoom Switch
OFF	ON	Auto cruising zoom switch

◎ Iris Mode Select Switch

Settings of Function & Mode Select Switches	Function of Iris Mode Select Switch
Sw1-7	
IRIS Position : A-M changeover Switch	
OFF	A (Auto) is hand side, M (Manual) is Lens Side. (Standard position set at the factory.)
ON	M (Manual) is hand side, A (Auto) is lens side. (Put the mode indication label enclosed with lens.)

IRIS ADJUSTMENT

The Factory default setting is shown in the figure.
If for some reason an abnormality occurs, make adjustments according to the procedure described below.

The adjusting trimmer becomes visible inside the drive unit by removing the cap at the front of the drive unit.
Use a small screwdriver or similar implement to rotate the trimmer.

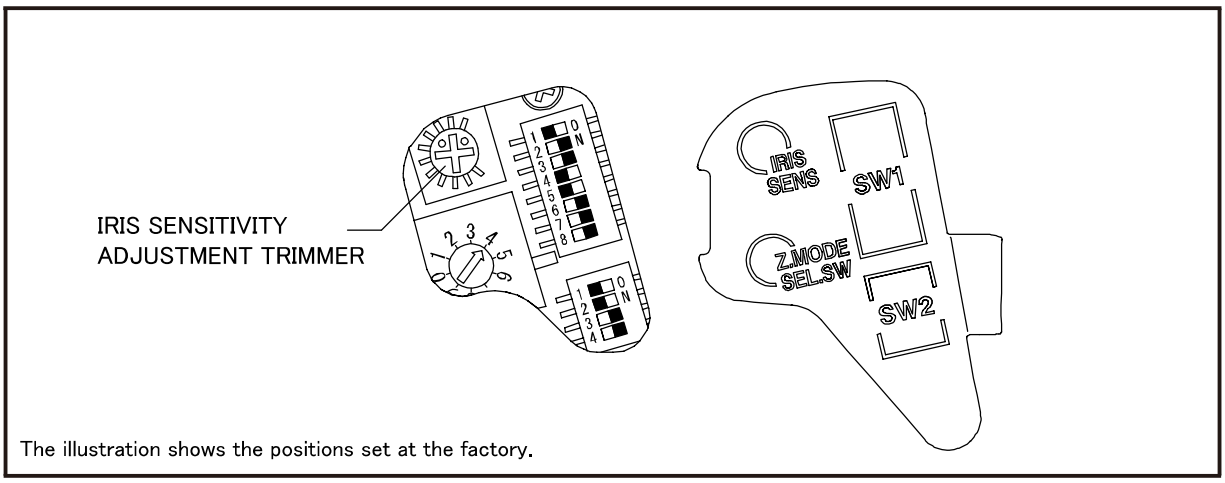

■ IRIS SENSITIVITY ADJUSTMENT

Rotate the iris sensitivity adjusting trimmer clockwise for higher sensitivity and counterclockwise for lower sensitivity. When obtaining higher sensitivity, be careful not to cause hunting.

REMOVAL AND MOUNTING OF DRIVE UNIT

The design of this lens allows the drive unit to be separated from the lens barrel (optical unit).
To remove the drive unit from the lens barrel, follow the instructions in the "Removal" section (refer to page 19).
Follow the instructions in the "Mounting" section (refer to page 20) to remount the drive unit.

Note: **Make sure that the serial numbers of the lens and drive unit match when remounting the drive unit on the lens barrel. The lens may not operate correctly if the serial numbers of the drive unit and lens barrel do not match.**

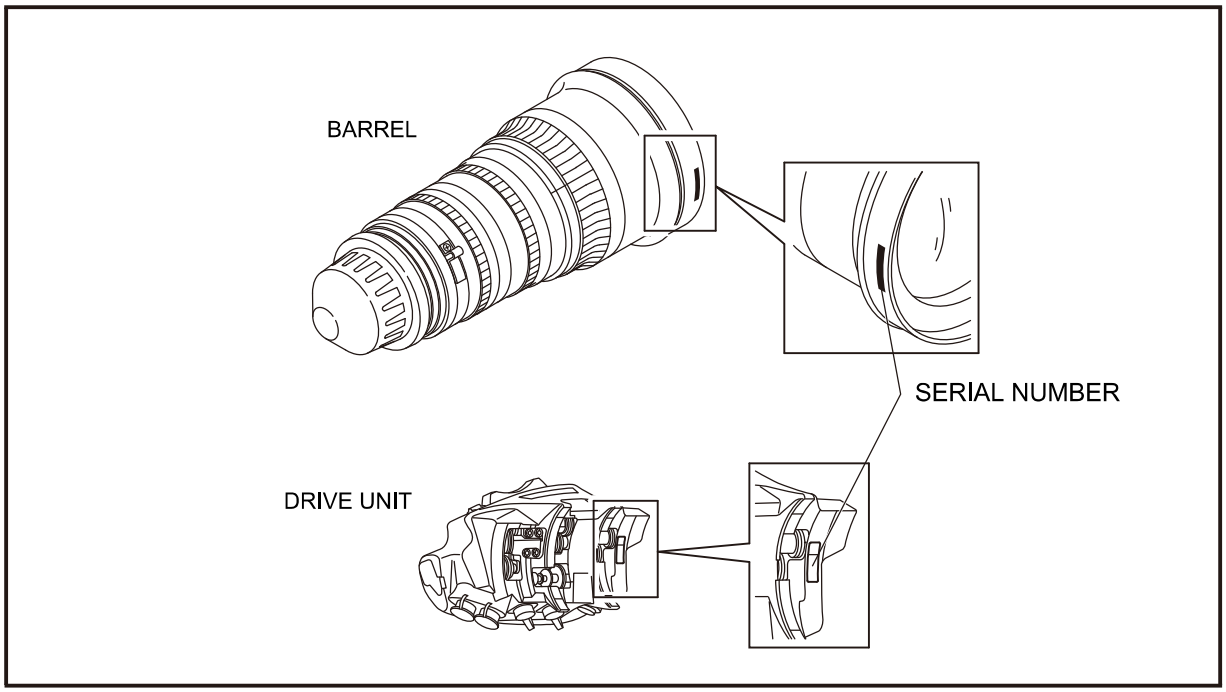

■ Removal

Turn off power to the lens.

① Holding the drive unit, remove the four screws securing the drive unit to the lens barrel.
To avoid dropping the drive unit, be sure to carefully hold it during this operation.

② To avoid losing the screws after removal, screw the four screws into the four storage holes in the drive unit.
Place the drive unit into the accessory storage bag.

③ Place the protective cap on the servo connector on the side of the lens barrel.

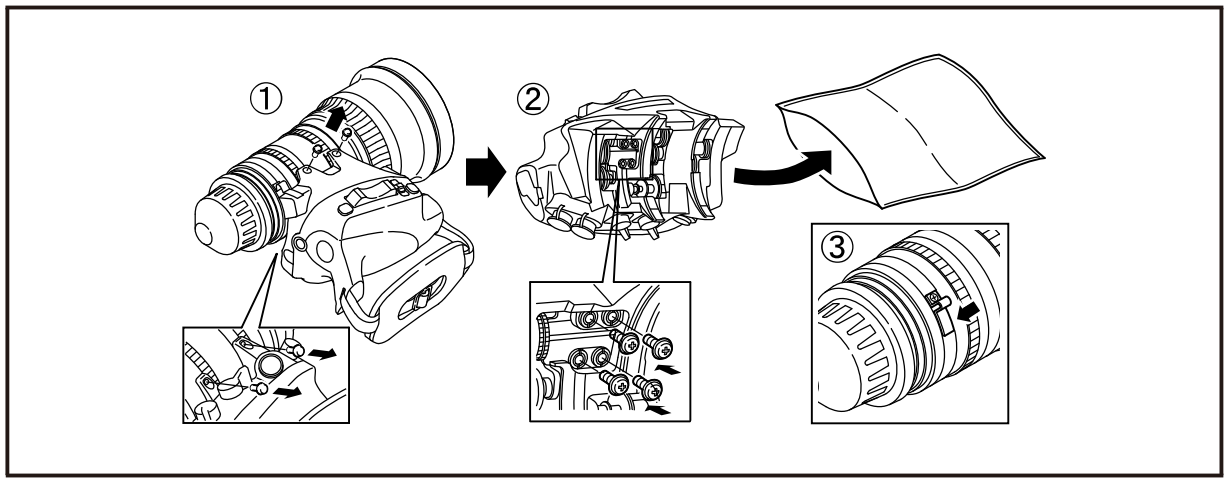

■ Mounting

Ⅰ Preparation (1)

① Remove the four screws from the storage holes of the drive unit.
② Rotate the black gears for focus, zoom, and iris, so that the protrusion on each white marked gear is aligned with the corresponding white mark next to the gear.

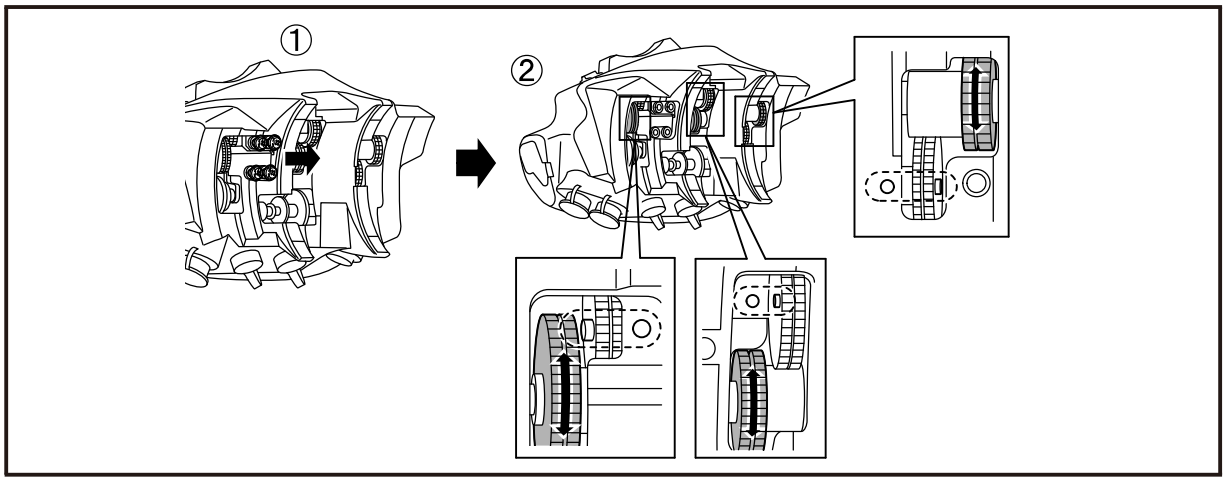

Ⅱ Preparation (2)

Rotate the focus to infinity, the zoom to telephoto, and the iris to wide open.

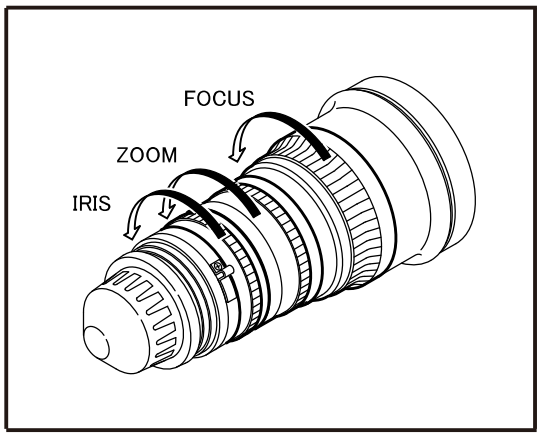

Ⅲ Attaching the drive unit

Make sure the drive unit is not connected to power.

① Remove the cap covering the drive unit connector on the lens barrel.
② Align the mating connectors on the lens barrel and drive unit, insert the positioning pin of the drive unit into the positioning hole in the lens barrel, connect the two units to each other.
③ Keeping both units together, rotate the zoom, focus, and iris rings by two markings on each scale so that the drive unit gears and the lens barrel gears engage properly.

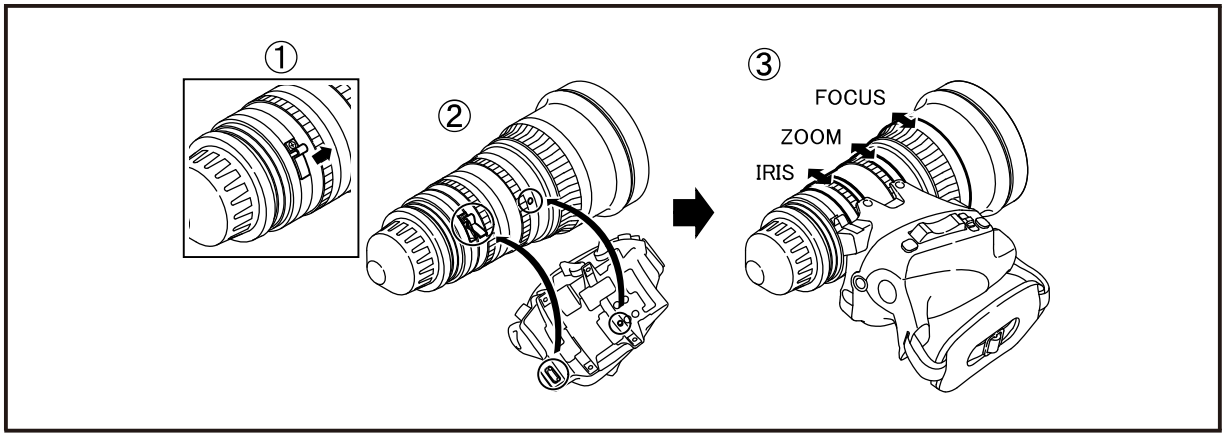

■ Mounting

Ⅳ Secure the drive unit

Keeping both units together on a stable surface, screw in the four screws to secure the drive unit to the lens barrel.

Note: DO NOT use any screws other than the original accessory screws.
DO NOT apply excessive force. A maximum torque of 80Ncm must not be exceeded.

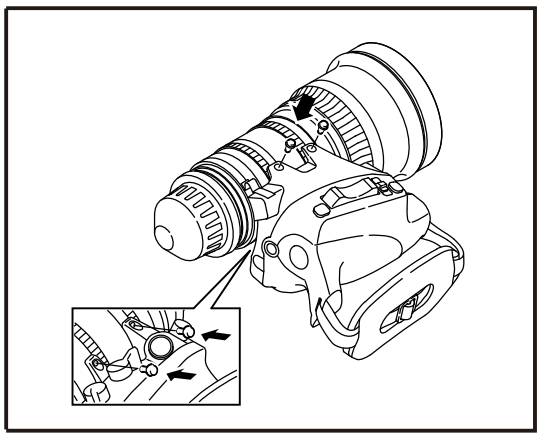

Ⅳ Initialization

Initialize the drive unit and the lens.

① Set the zoom and focus servo/manual select knobs to "S."
② While holding down the "VTR" and "RET" switches simultaneously, turn on power to the lens. After the zoom ring starts to move, release the switches. The LED on the front of the drive unit will light and the zoom, focus, and iris rings will rotate to initialize the lens. After the initializing program finishes, the LED will turn off.
③ Turn off power once, and turn on power again.

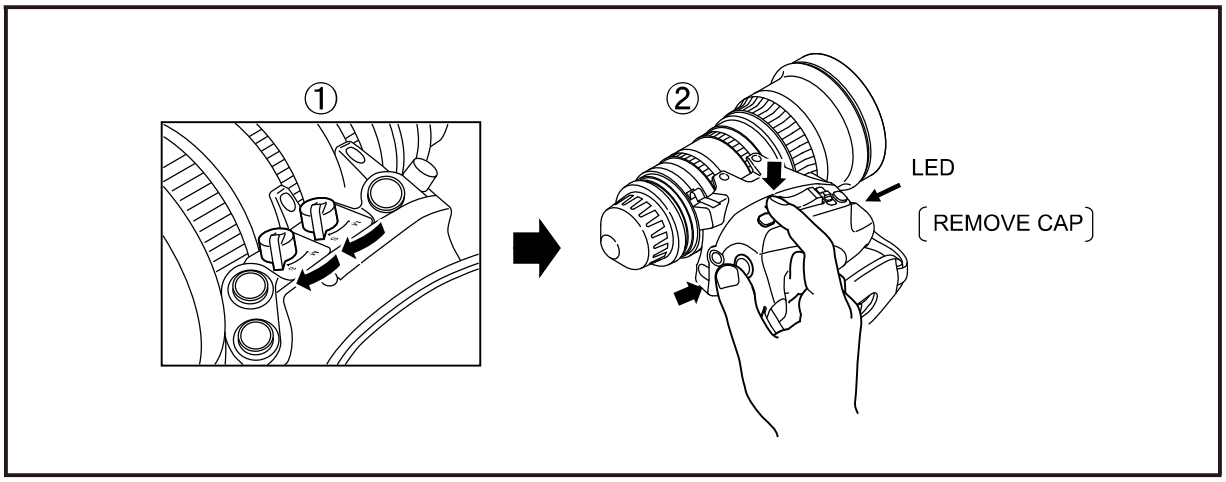

CHANGING FOCUS RING AND ADJUSTMENT OF OPTICAL AXIS

Another unit system of focus ring (meter or feet, option) is available.
The pre-installed focus ring can be replaced with the optional focus ring.

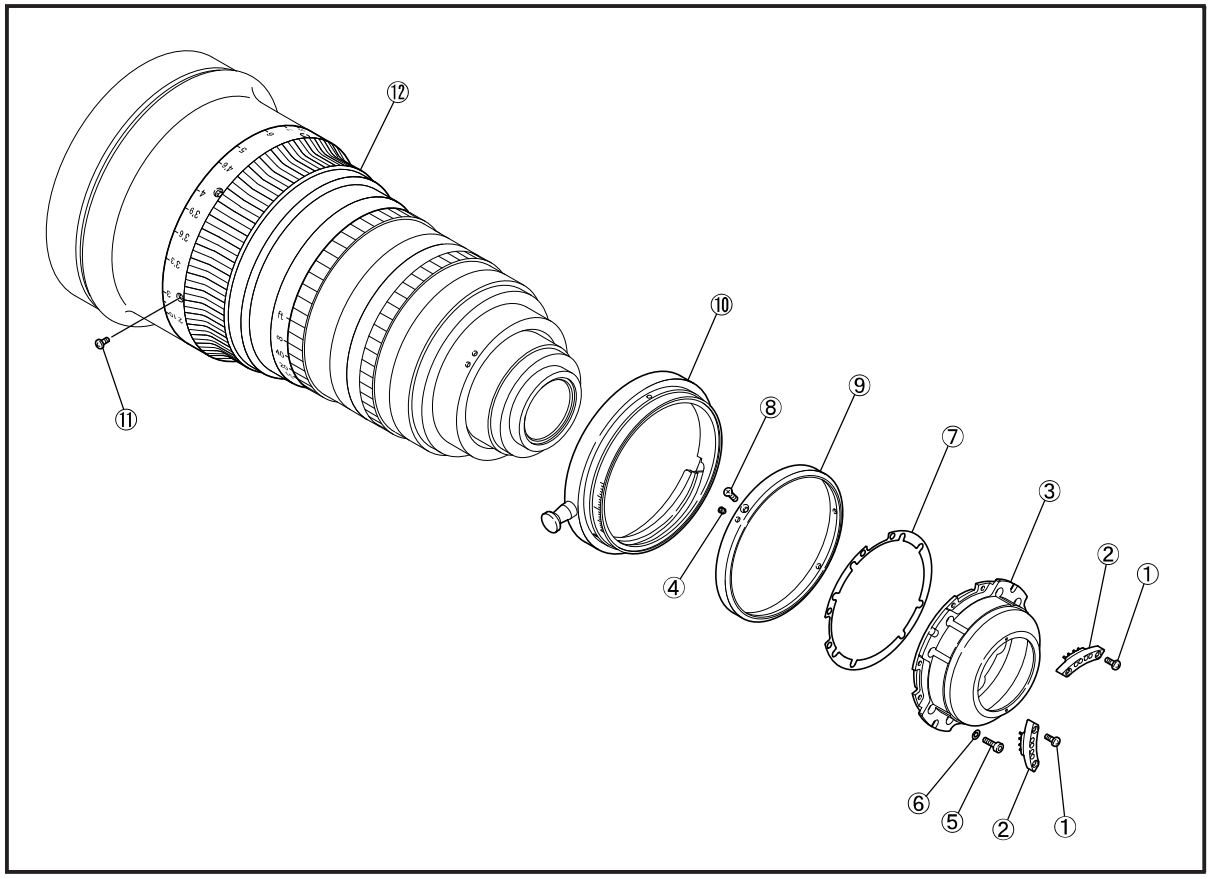

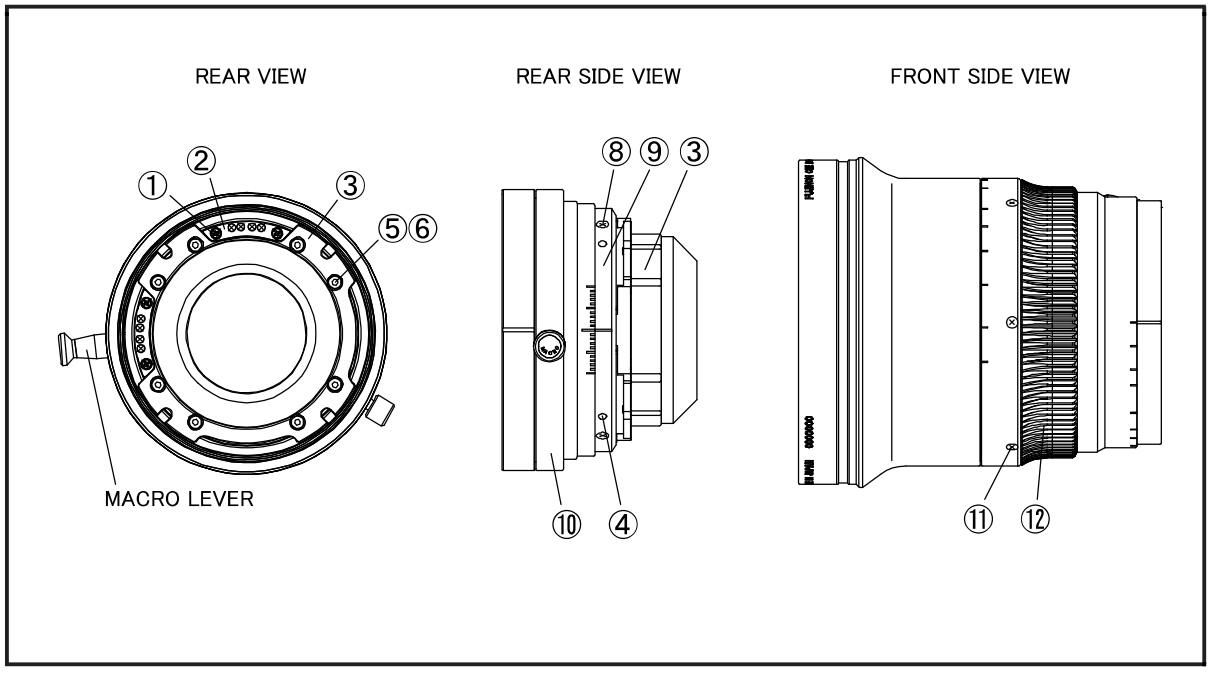

(1) CHANGING FOCUS RING

The pre-installed focus ring can be replaced with the optional focus ring.

a. Remove the drive unit. (Refer to section "Removal and Mounting of Drive Unit" on page 19.)
b. Remove four screws ① , and detach two connecors ② from mount ring ③ .
c. Slightly loosen the adjoining two of four screws ④ for adjusting optical axis, using a hexagon screwdriver (size: 0.89 mm).
d. Remove eight screws and eight spring washers ⑤⑥ , and detach mount ring ③ and washer ⑦ .
e. Remove four screws ⑧ , and detach index ring ⑨ .
f. While pulling the macro lever, rotate macro ring ⑩ clockwise as viewed from the mount ring side.
g. While pulling the macro lever, detach macro ring ⑩.
h. Remove six screws ⑪ , and detach focus ring ⑫ .
i. Install a new focus ring ⑫ (option), and fix it with six screws ⑪.
j. While pulling the macro lever, install macro ring ⑩ and rotate it fully counterclockwise as viewed from the mount ring side.
k. Pressing index ring⑨9 against macro ring ⑩ , install four screws ⑧ .
l. Install washer ⑦ , mount ring ③ , eight spring washers and eight screws ⑥⑤ , and slightly tighten eight screws ⑤ .
m. Tighten two screws ④ which are loosened in step 'c.'
n. Tighten eight screws ⑤ to fix mount ring ③ .
o. Install four screws ① and tighten them to fix two connectors ② to mount ring ③.
p. Mount the lens onto the camera and check that the optical axis is optimum. (Refer to section "Confirmation of Optical Axis" on the next page.) Perform adjustment if required.
q. Mount the drive unit. (Refer to section "Removal and Mounting of Drive Unit.")

(2) ADJUSTMENT OF OPTICAL AXIS

The alignment of the optical axes between the camera and the lens can be done as follows.

■ Confirmation of Optical Axis

a. Set the zoom at the telephoto end. Aim the camera so that an object is located at the center of the viewfinder.

b. Operate the zoom to the wide end. If the object at the center in the vierfinder does not move, the optical axis is optimum. If not, the optical axis is not optimum. In this case, perform "Adjustment" below.

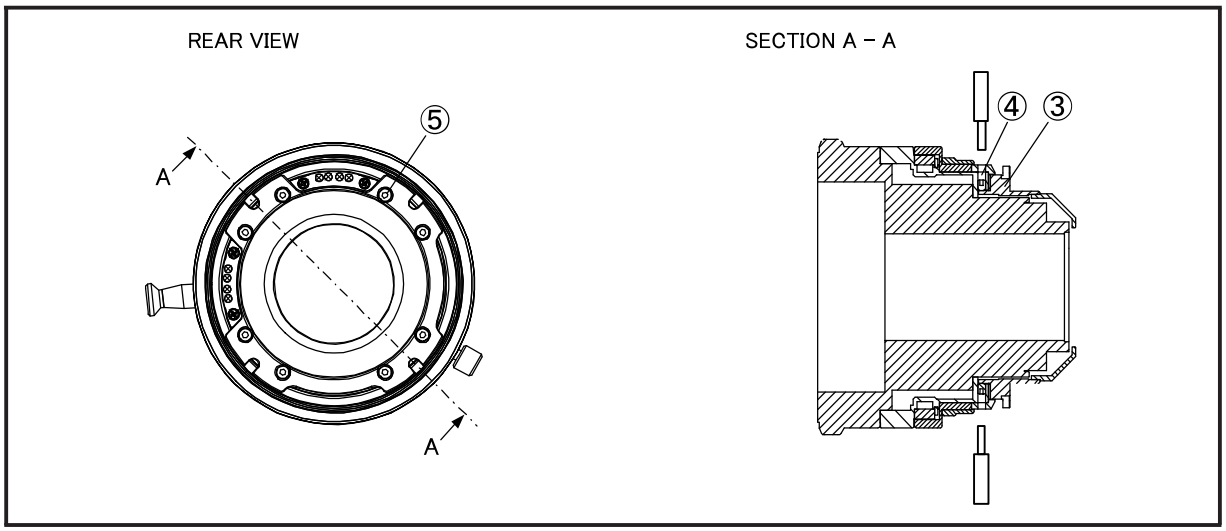

a. Slightly loosen eight screws ⑤ .
b. Install the lens onto the camera.
c. Set the zoom at the telephoto end.
d. Aim the camera so that an object is located at the center of the viewfinder.
e. Operate the zoom to the wide end.
f. Confirm that the object is maintained at the center. If not, adjust four adjustment screws ④ using a hexagon screwdriver (size: 0.89 mm), so that the object is located at the center.
g. Operate the zoom to the telephoto end, and confirm that the object is maintained at the center. (If the object is not at the center, perform steps 'c' to 'e' again.)
h. After the adjustment is completed, detach the lens from the camera, and then tighten eight screws ⑤ .
i. Finally, confirm that four screws ④ for adjustment of optical axis are securely tightened.

MAINTENANCE

■ CLEANING THE LENS

Prepare lens cleaning liquid and lens cleaning paper on the market.

a. First use a soft brush or blower brush to brush dust off the surface of the lens.

b. Fold the cleaning paper to an adequate size, and dip a part of it into the liquid. Lightly wipe the lens from the center to the periphery while drawing a spiral with the wet paper part. Repeat this operation using new paper until the lens is thoroughly cleaned.

■ REMOVING THE MOISTURE

When the lens main body is wet, first wipe the water on the external part with dry cloth immediately. Then put it together with desiccant into a vinyl bag for sealing to remove the moisture inside.

■ STORAGE

If it is assumed that the lens will not be used for a long term, store it in a place where high temperature, much moisture or corrosive gas is absent.

■ INSPECTION

If an abnormality occurs on the lens, contact the sales agent from which you purchased the lens.

To maintain the high performance for a long term for use, we recommend that a periodic inspection is conducted at least once a year.

Note that we may not be able to inspect and repair our products which have been remodeled on the user's end.

SPECIFICATION

ITEM \ LENS	ZK2.5×14 -SAFB/SAMB	ZK4.7×19 -SAFB/SAMB	ZK3.5×85 -SAFB/SAMB
Mount	PL Mount		
Focal Length	14 ～ 35 mm	19 ～ 90 mm	85 ～ 300 mm
Zoom Ratio	2.5×	4.7×	3.5×
Maximum Photometric Aperture (T No.)	T2.9	T2.9	T2.9 (85～218mm) ～T4.0 (300mm)
Iris Range	T2.9 ～ T22、Closed		
Image Format	27.45 × 15.44 mm (φ31.5 mm) Aspect Ratio 1.78 : 1		
Flange Focal Length (in Air)	52 mm (Adjustable Range : ±0.2 mm)		
Minimum Object Distance (from Image Plane) ＊ [in Macro Opertation]	0.6 m / 2 ft [0.33m / 13 in]＊	0.85 m / 2 ft 10 in [0.37 m / 15 in]＊	1.2 m / 4 ft [0.97 m / 3 ft 2 in]＊
Field Angle (Hor.×Ver.) at Wide End	88.9° × 57.8°	71.7° × 44.2°	18.7° × 10.4°
Field Angle (Hor.×Ver.) at Tele End	42.8° × 24.9°	17.3° × 9.8°	5.2° × 3.0°
Object Area at M.O.D. (Hor.×Ver.) at Wide End	70 mm × 394 mm	917 mm × 516 mm	274 mm × 154 mm
Object Area at M.O.D. (Hor.×Ver.) at Tele End	275 mm × 155 mm	193 mm × 109 mm	79 mm × 44 mm
Clear Aperture of Lens Front	81.12 mm	86.4 mm	85.0 mm
Clear Aperture of Lens Rear	26.50 mm	27.86 mm	34.5 mm
Lens front diameter	φ114 mm		
Full length	231 mm	226 mm	249 mm
Focus operation angle	200°		
Zoom operation angle	120°		
Iris Control	Servo or Manual		
Zoom Control	Servo (Operation Time: 1.2 ～ 45 s) or Manual		
Focus Control	Manual (Including Motor for Servo Control)		
Input Voltage	10 ～ 36 VDC (Through "Connector to Camera") 10 ～ 30 VDC (Through "Connector for Expansion")		
Current Consumption (at 12V DC) (Quiescent)	200 mA (Approx.)		
Current Consumption (at 12V DC) (Maximum)	950 mA		
Mass (with Drive Unit)	Approx. 2.9 kg	Approx. 2.8 kg	Approx. 3.1 kg
Mass (without Drive Unit)	Approx. 2.4 kg	Approx. 2.3 kg	Approx. 2.6 kg

中 文 版

◆ 本使用手册包含日文版本英文版本中文版本技术资料。

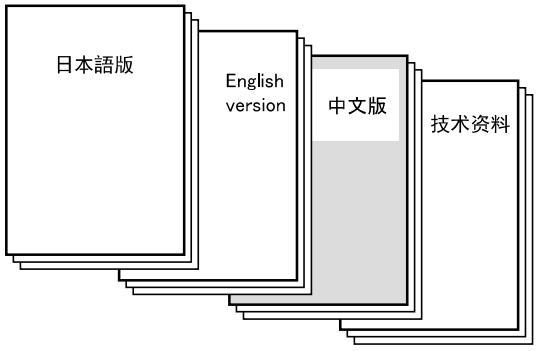

■产品中有害物质的名称及含量

			有害物质					
		部件名称	铅（Pb）	汞（Hg）	镉（Cd）	六价铬（Cr（Ⅵ））	多溴联苯（PBB）	多溴二苯醚（PBDE）
本体								
		外壳（金属部件）	×	○	○	○	○	○
		外壳（树脂部件）	○	○	○	○	○	○
		电缆部件	×	○	○	○	○	○
		光学部件	×	○	○	○	○	○
		基板部件	×	○	○	○	○	○
备注	本表格依据 SJ/T11364 的规定编制 ○：表示该有害物质在该部件所有均质材料中的含量均在 GB/T26572 规定的限量要求以下。 ×：表示该有害物质至少在该部件的某一均质材料中的含量超出 GB/T26572 规定的限量要求。							
	10图形含义：此标识是适用于在中国境内销售的电子信息产品的环保使用期限。 此产品使用者只要遵守安全和使用上的注意事项，从生产之日起的十年期间 不会对环境污染，也不会对人身和财产造成重大影响。此年限是根据安全使用期限的相关法律得出的。							

安 全 使 用 须 知

以下是本产品的重要安全使用须知。请在使用前仔细阅读并遵守指示。

文中的⚠警告 及⚠注意 表示：

⚠警告　用不当可能导致死亡或严重伤害。

⚠注意　用不当可能导致人员伤害或物品损坏。

⚠警 告

- 产品内部切勿受潮。这样可能引起火灾或触电。如果出现异常情况，立即切断镜头电源。切勿继续使用。
- 务必将所有部件稳固连接。在高处使用时，部件的坠落，可能会导致严重事故。
- 切勿通过镜头目视太阳等任何强光源，以免伤害眼睛。

⚠注 意

- 携带镜头时务必小心。如果镜头脱落，可能会损坏以及造成人体伤害。
- 必须确认要使用镜头部件（镜头及附件）的摄像机能向镜头部件提供足够的电源。否则镜头部件将无法正常工作，摄像机会被损坏。镜头及附件的耗电量数值在其使用手册的“规格”一节中说明。
- 镜头通电之前，确保所有部件正确连接以后再使用。
- 在安装或拆除电线时，务必握住电线连接处。切勿用力过猛损坏电线，这可能会引起火灾或触电。
- 如发现异常情况，例如异常的烟、噪音、异味或异物等，应立即切断镜头电源并从摄像机上卸下镜头，并尽快联系我们的销售代理商。
- 切勿改造本镜头。这样会损害产品的功能或引起触电。

一般注意事项

- 使用产品时，切勿超越说明书以外的范围。
- 镜头及其附件都是高精密的仪器，切勿猛烈撞击。特别不要撞击镜片部分。
- 当镜头从温度较低的地方携带到温度较高、湿度较大的地方时，镜头的玻璃镜片上可能形成水汽。为了避免水汽的形成，请在移动镜头前，首先让镜头适应目标区域的环境温度。
- 使用摄像机时，切勿触碰镜头的前部。
- 不使用摄像机时应盖上镜头盖。
- 如果与镜头连接的附件具有机械驱动传动部件，请在连接前检查连接处的形状是否有异常并检查是否有异物。如有异物，请清除。如连接部分的形状有异常，请立即联系我们的销售代理商。
- 在雾天、雨天、雪天使用镜头时，请遮盖镜头以防水湿。
- 为了尽量减少携带中碰撞镜头，从摄像机上拆卸镜头之前，请将变焦设为最广角端，聚焦设为无限远。
- 拆下驱动部分使用时，如果镜头倾斜45度以上，变焦环则可能会因自重旋转。敬请注意。
- 按装驱动部分使用时，如果使用外带监视器转动光圈，则驱动部分可能会受损。请在使用外带监视器之前拆下驱动部分。关于拆卸方式，请参照使用说明书正文的 “驱动部的装卸方法”。

关于接通电源时的初始设定

接通镜头的电源之后，需要进行镜头的初始设定。

・聚焦与变焦的设定方式因接通电源时镜头的伺服/手动选择旋钮的状态而异。
①设为“伺服”时：
均自动进行聚焦与变焦的初始设定。
②设为“手动”时：
通过手动转动各个环进行聚焦与变焦的初始设定。
使用LDS 等通信功能时，请务必进行初始设定。初始设定方法的详细说明请参照下表。
・不受光圈模式切换开关影响，光圈的设定方式因接通电源时镜头的“ 功能 & 模式切换开关 SW1④”的状态而异。（请参照15页）
①设为“ON”时：
自动进行初始设定。
②设为“OFF”时：
通过以手动方式转动光圈环进行初始设定。
如使用 LDS 等通信功能，或通过外部机器对光圈进行操控时，请务必进行初始设定。

伺服/手动选择旋钮的设定 / 镜头各部分	①伺服（自动）	②手动
聚焦	聚焦进行动作，自动进行初始设定。	通过将聚焦环手动转动约 60 度进行初始设定*1。（请以2秒以内的速度转动聚焦环。）
变焦	变焦进行动作，自动进行初始设定。	通过将变焦环手动转动约 90 度进行初始设定*1。（请以2秒以内的速度转动聚焦环。）

功能&模式切换开关(SW1④)的设定 / 镜头的各部分	① ON	② OFF
光圈	光圈起动，自动进行初始设定。	通过以手动方式将光圈转动大约45度，进行初始设定。*2（请以2秒钟以内的速度按开放端 一关闭端旋转光圈环）

*1 如果未进行初始设定（未将环转动到指定角度）并在这种状态下将伺服/手动选择旋钮选为伺服，则自动开始聚焦/变焦的初始设定。

*2 在未能将光圈环旋转至所定角度而无法进行初始设定的情况下，如在该状态下将功能&模式切换开关SW1④切换至ON，光圈则自动开始进行初始设定。

目　　录

- 目录 1
- 一般说明 2
- 商品组成 2
- 安装方法 4
- 后焦的调节 5
- 光圈操作 6
- 聚焦操作 7
- 变焦操作 8
  - (1) 手动操作 9
  - (2) 压板式变焦控制杆操作 9
  - (3) 快速变焦操作 10
  - (4) 自动导航变焦操作 11
- 微距拍摄操作 12
- 其它功能 13
- 连接器的端子布局 14
- 功能和模式选择开关说明 15
- 光圈调节 18
- 驱动部的装卸方法 19
- 聚焦环的更换与光轴调整 22
  - (1) 聚焦环的更换 23
  - (2) 光轴的调整 24
- 保养 / 点检 25
- 规　格 26

■ 图 解

Fig. 1-1　外观图 ZK2.5×14-SAFB / ZK2.5×14-SAMB

Fig. 1-2　外观图 ZK4.7×19-SAFB / ZK4.7×19-SAMB

Fig. 1-3　外观图 ZK3.5×85-SAFB / ZK3.5×85-SAMB

注：　本手册中图示的镜头或其它设备可能与实际形状有出入。

一 般 说 明

本镜头开发用于 35mm PL卡口摄像机。

商 品 组 成

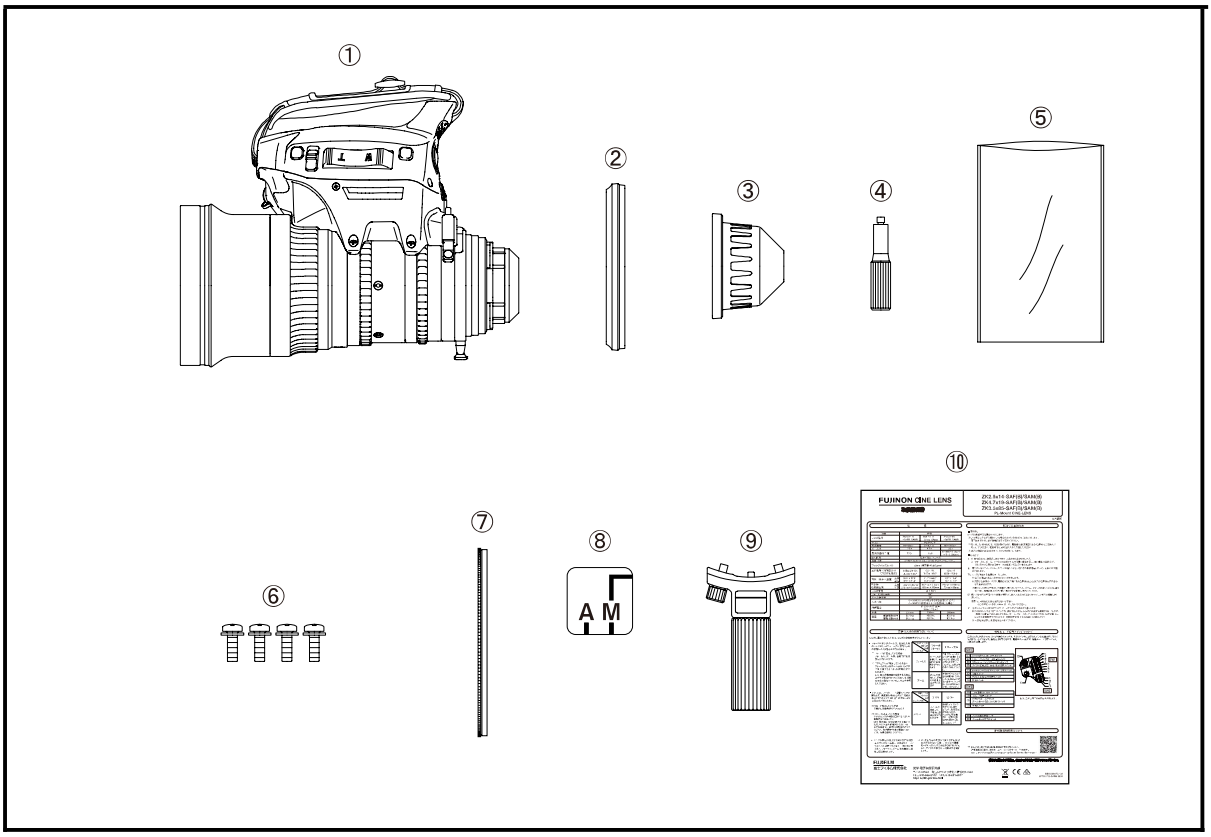

数量

① 变焦镜头 1
② 前镜头盖 1
③ 后镜头盖 1
④ 变焦杆 1
⑤ 驱动部分收放袋 1
⑥ 驱动部分安装螺丝（备用） 4
⑦ 保护滤光镜 1
⑧ 光圈模式显示标签 1
⑨ 托架 1
⑩ 使用手册 1

* 关于托架

- 用于将镜头固定到支撑杆上。在镜头上安装附件并且总重量为 4 g 以上时，扛在肩上使用时，或摄像机的总重量为 6kg 以上时，请务必使用。
- 由于本支撑架的支撑螺丝部分可以拆卸，所以可用于高度不同的 2 种镜头支持系统。

■ 将支撑架装到镜头上

a. 将支撑架上部中央的销对准镜头的孔位置插入。

b. 将支撑架两侧的安装螺丝装到镜头上拧紧。

支撑架的安装

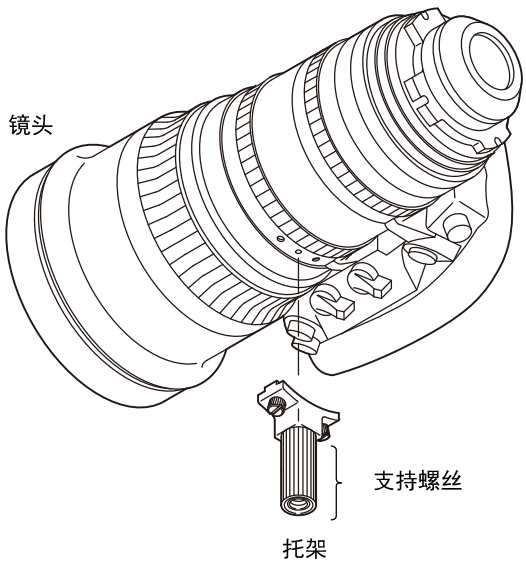

安 装 方 法

■ 连接摄像机

注. 安装镜头之前，应关闭摄像机电源。使用外部电源时，也请关闭外部电源。

⚠警 告　务必将所有部件稳固连接。在高处使用时，部件的坠落，可能会导致严重事故。

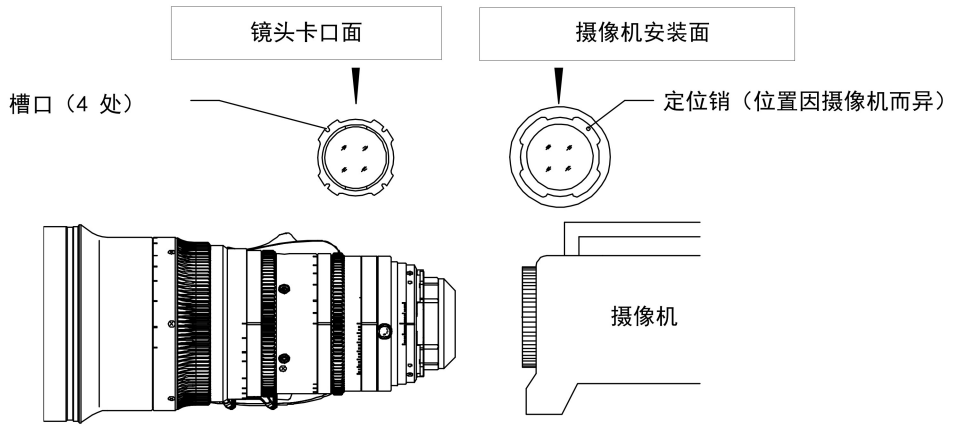

a. 打开后组镜头盖。

b. 向逆时针（从镜头正面看）方向充分转动摄像机连接卡环。

c. 进行定位，将摄像机安装面上的定位销可靠地插入镜头接口面上的槽口中，使镜头与摄像机的安装面贴合。（安装面上的定位销位置可能会因摄像机而与图形不同。）

d. 向顺时针方向充分转动连接卡环。

注：首次在摄像机上安装镜头或在不同的摄像机上安装镜头时，请务必进行后焦的调节（参阅5页）。
如果没有正确调节镜头与摄像机之间的后焦，在调焦时可能无法对焦，从而给拍摄带来很大的不便。而且也无法发挥镜头最基本的光学性能作用。

支撑架使用时的安装状态

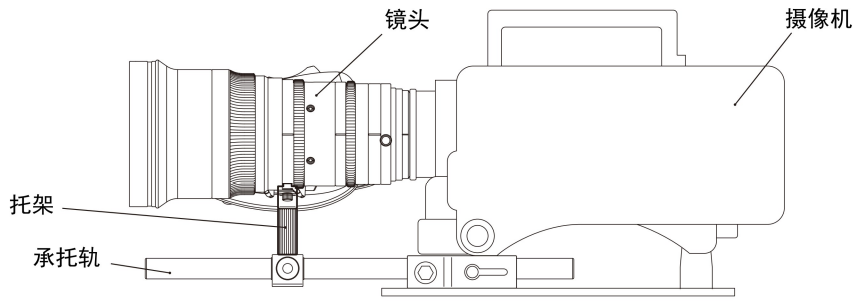

后 焦 的 调 节

后基距指从镜头的镜座（安装表面）到聚集面的距离。

后焦可能会因安装摄像机的不同或外部气温等各条件的不同而产生偏移。出现这种情况时，请按下述要领进行调整。

■ 拍摄对象和光圈的条件

1. 拍摄对象　　请剪下本手册末尾附带的“西门子星标”作为拍摄对象使用。
2. 拍摄距离　　大约 3 米
3. 光 圈:　　打开或接近打开

■ 调 节

有关聚焦与变焦的操作方法，请参照 7 与 8 页。

a. 逆时针拧松后焦锁定旋钮。
b. 进行变焦操作，将其调至最广端。
c. 使用后焦锁定旋钮转动后焦调节环，将“西门子星标”置于约 3 米的位置进行焦点对正，当黑白射线网纹最清晰时即为最适合焦点的位置。
d. 进行变焦操作，将其调至远距端。
e. 进行聚焦操作，与“西门子星标”对正焦点。
f. 变焦回到最广端，确保步骤‘c’中对正的焦点位置不变。
g. 重复上述步骤‘b’～‘f’两次或三次。（当变焦全域中的最适合焦点位置得以保持时，就正确地调节了后焦。如果焦点未对正，则未能正确地调节后焦，此时需再次从步骤‘b’开始进行调节。）
h. 调节完后，拧紧后焦锁定旋钮。

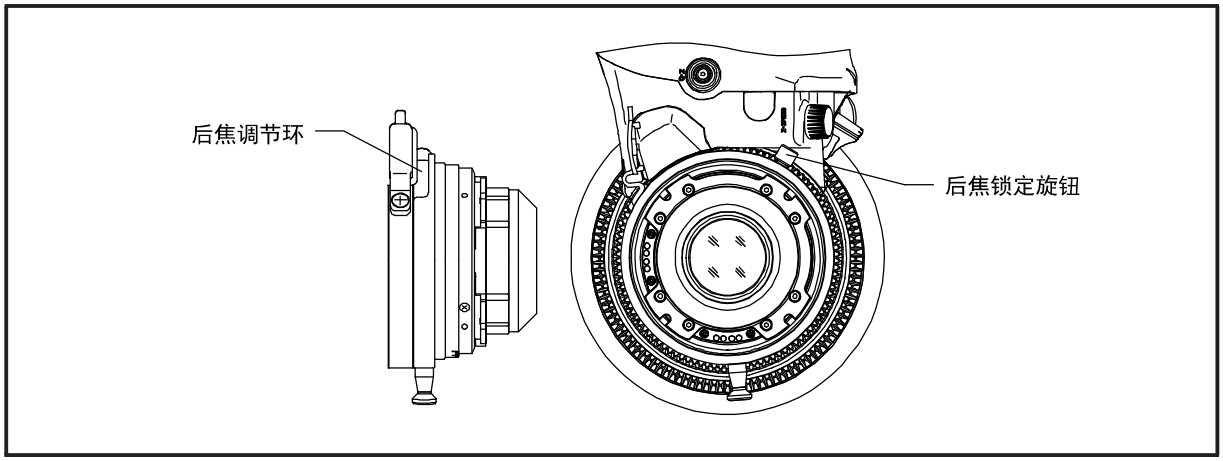

光 圈 操 作

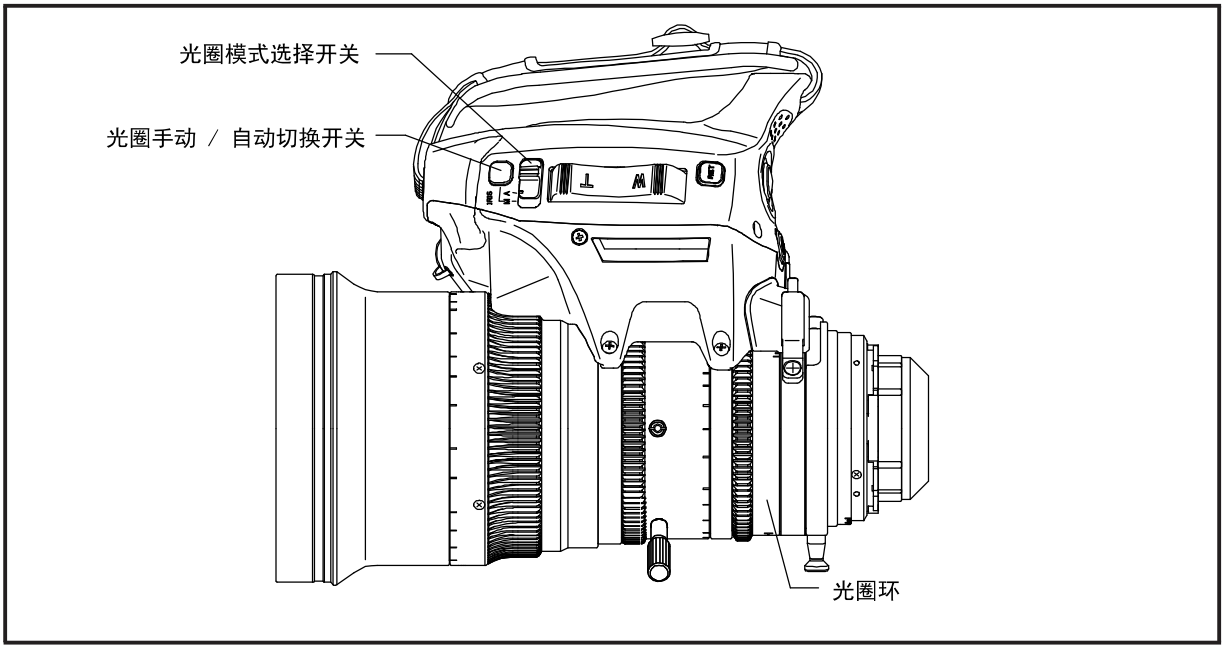

光圈模式有两种：自动光圈和手动光圈。在各种模式中的操作说明请参阅各种模式的相关介绍。

注：摄像机支持自动光圈功能时才可使用自动光圈模式。
（可能会因与摄像机的兼容性而不能正常动作。此时请在手动模式下使用。）

■ 自动光圈模式

将光圈模式选择开关设为“A”。镜头光圈将根据拍摄目标的亮度自动调节。

■ 手动光圈模式

a. 将光圈模式选择开关设为“M”。

b. 通过手动旋转光圈环来调节光圈。顺时针旋转将缩小光圈；逆时针转动旋转将放大光圈。

注1：即使光圈模式为手动，如果按光圈手动 / 自动切换开关，在按着的时侯，会变为自动调节光圈。

注2：将光圈A-M位置转换开关（参见 15 页）设为ON，可以在光圈模式选择开关的自动光圈模式位置与手动光圈模式位置之间切换。
切换位置时，请将镜头附带的模式显示标签贴在镜头的模式指示部位，以防止引起混淆。

聚 焦 操 作

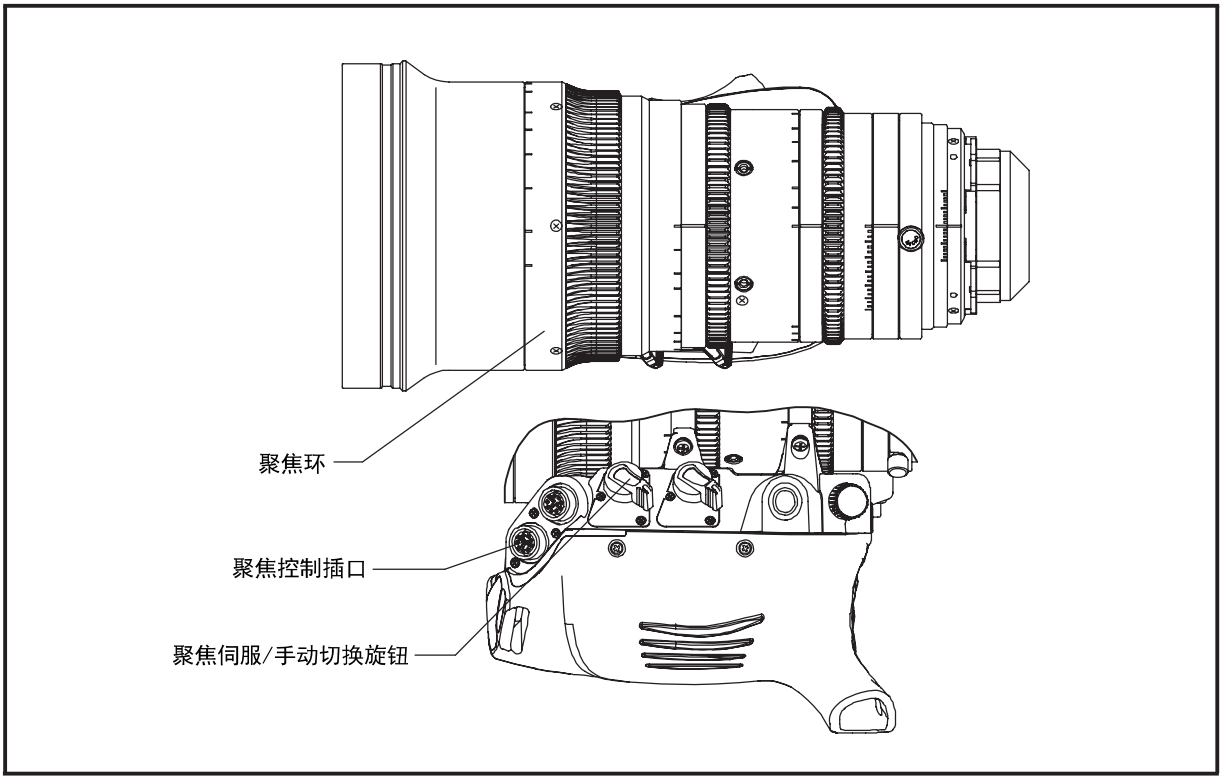

直接手动旋转聚焦环便可聚焦。
从摄像机一端顺时针转动聚焦环，可聚焦近处的对象；逆时针旋转聚焦环可聚焦远处的对象。

如另购专用附件可以进行遥控聚焦。使用伺服操作专用附件时，请将聚焦伺服/手动切换旋钮设为“S”。

变 焦 操 作

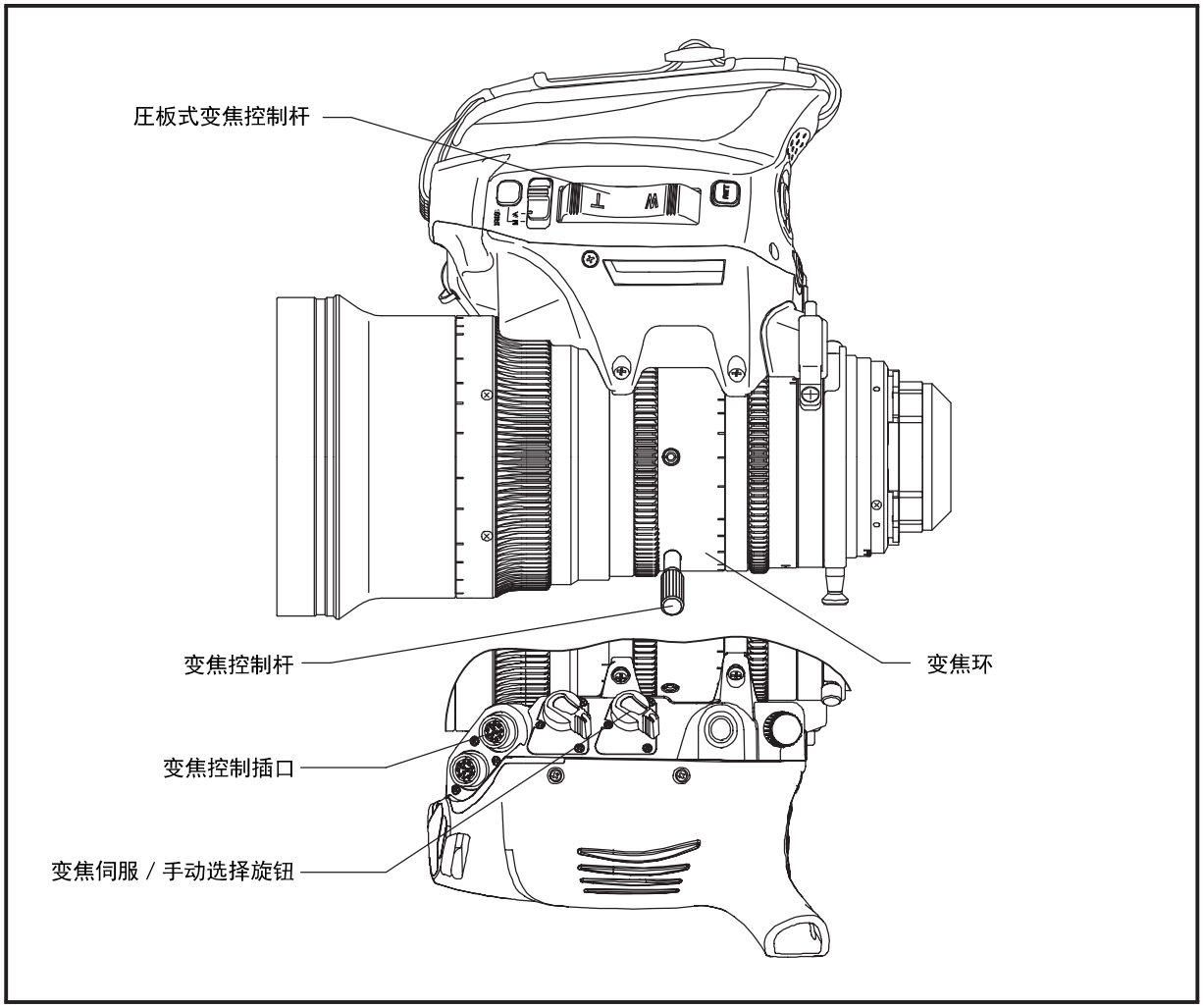

变焦操作有以下四种模式：

页码

(1) 手动操作 9

(2) 压板式变焦控制杆操作 9

(3) 快速变焦操作 10

(4) 自动导航变焦操作 11

各模式操作说明请参阅各种模式的相关介绍。
如另购专用附件可以遥控变焦。

(1) 手动操作

a. 将变焦伺服 / 手动选择旋钮设为“M”。

b. 直接转动变焦环或使用变焦控制杆。
顺时针转动（从摄像机一侧看）变焦环将焦点移到广角端；或逆时针转动变焦环将焦点移到远距端。
（如果直接旋转变焦环，建议卸下变焦控制杆以实现平滑变焦。）

(2) 压板式变焦控制杆操作

a. 将变焦伺服 / 手动选择旋钮设为“S”。

b. 按压板式变焦控制杆。
按控制钮的 T-侧向远距变焦；按 W-侧可向广角变焦。调节按控制杆的力度，可来控制变焦的速度。用力按会使变焦速度加快，而轻按会使变焦速度变慢。

<最大变焦速度的控制>
通过操作最大变焦速度控制旋钮（见下图），可按7档调节最大变焦速度。顺时针旋转旋钮可加快变焦速度。

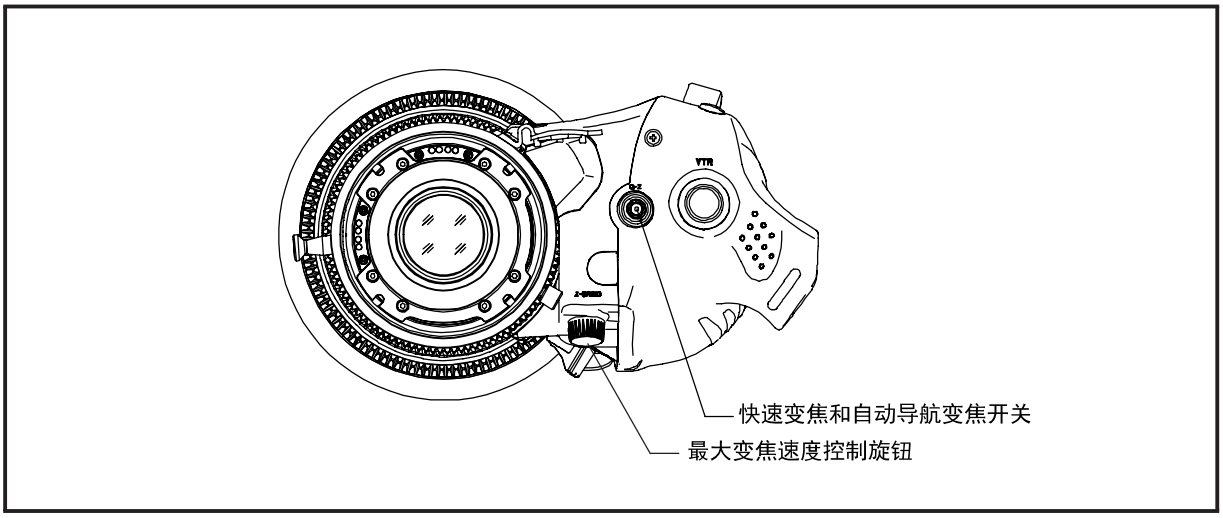

(3) 快速变焦操作

在快速变焦操作模式中，按下开关可快速变焦到远端。使用者可在下列情况中使用这功能。

- 为准确聚焦,需要快速变焦到最远端时。
- 当拍摄大特写，需要快速确定构图时。

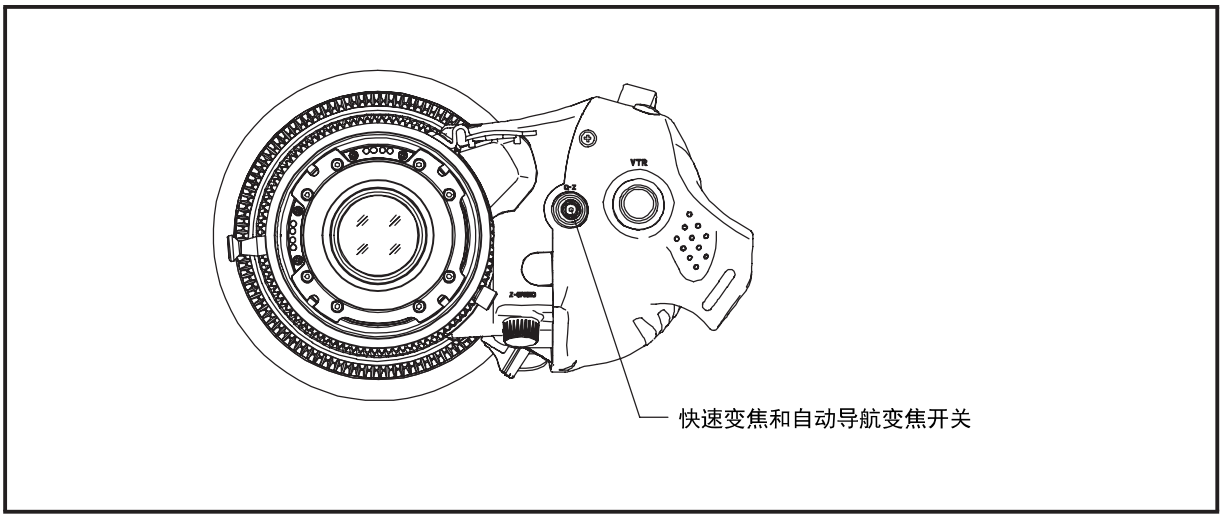

操作方法

a. 将变焦伺服／手动选择旋钮设为“S”。

b. 按住快速变焦和自动导航变焦开关直至变焦到达最远端。

c. 按住快速变焦和自动导航变焦开关，进行精确聚焦，或在大特写中确定画面的构图。

d. 松开快速变焦和自动导航变焦开关。

— 变焦将快速返回到先前位置。(如果在变焦返回至先前位置之前，您再次按下快速变焦和自动导航变焦开关，将重新开始快速变焦。操作完成后，松开开关，变焦将快速返回到先前位置。)

注1： 通过在“功能和模式转换开关”中设定合适的开关（参阅15页），回放开关和 VTR 开关也可用作快速变焦和自动导航变焦开关。

注2： 在快速变焦操作模式中，不论最大变焦速度的设置如何，变焦都按最大速度移动。

注3： 如果在按下压板式变焦控制杆的同时，按下快速变焦和自动导航变焦开关，则变焦模式为自动导航而不是快速变焦。

(4) 自动导航变焦操作

在自动导航变焦模式中，焦点将匀速移到最远端或最广端。这种模式适合于变焦范围内的缓慢匀速变焦。

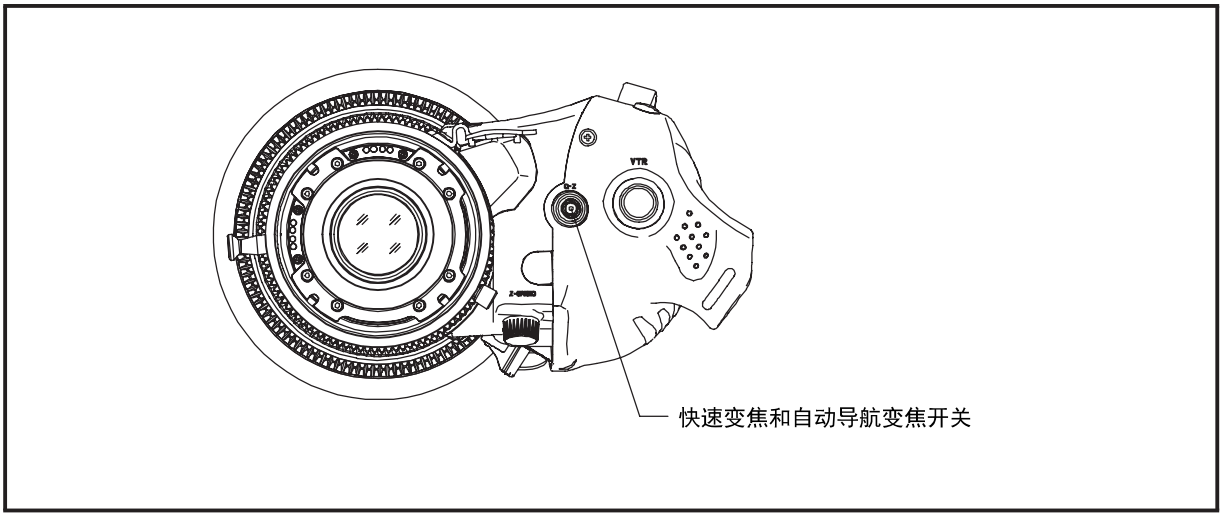

操作方法

a. 将变焦伺服 / 手动选择旋钮设为“S”。

b. 按下压板式变焦控制杆，调节变焦速度。

c. 在按下压板式变焦控制杆的同时，按下快速变焦和自动导航变焦开关。

— 自动导航变焦模式将启动。

d. 将手从压板式变焦控制杆上移开。

— 焦点将匀速（变焦速度由按下快速变焦和自动导航变焦开关时的变焦速度决定）移到最广端或最远端。

注：通过在“功能和模式转换开关”中设定合适的开关，（参阅15页），回放开关和 VTR 开关也可用作快速变焦和自动导航变焦开关。

解除方法

有三种方法可以解除自动导航变焦模式。

1. 沿压板式变焦控制杆的变焦方向一侧继续按下控制杆。

— 当按下压板式变焦控制杆的力度超过自动导航变焦操作设定力度时，自动导航变焦模式将解除。解除后，变焦将沿解除前的方向继续移动。
（这样可解除自动导航变焦模式，保持平滑的变焦运动。）

2. 在压板式变焦控制杆的变焦运动方向相反一侧按下控制杆。

— 自动导航变焦模式立即解除，变焦将朝相反方向移动。

3. 按下快速变焦和自动导航变焦开关。

— 自动导航变焦模式立即解除，变焦将停止。

微距拍摄操作

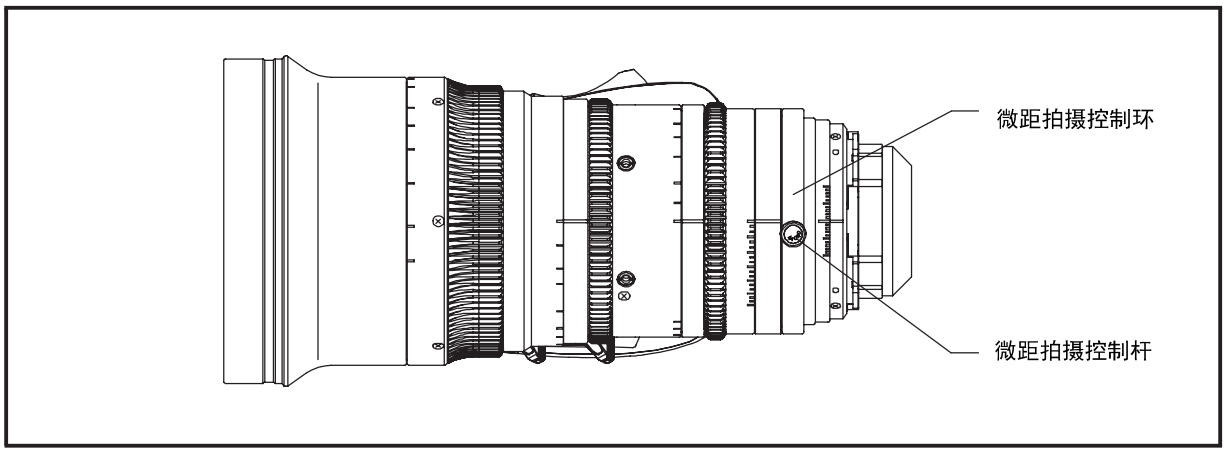

■ 操作方法

执行以下步骤进行微距拍摄（近处拍摄）。

a. 充分旋转聚焦环将聚焦调到最近侧。

b. 拉住微距拍摄控制杆，同时将微距拍摄控制环朝着从摄像机侧看顺时针方向转动到最大位置。

c. 通过控制变焦来聚焦镜头。

注：当微距拍摄控制环位于中间位置时，也可以拍摄对象。
在这种情况下，最短拍摄距离(M.O.D.)以及在最短拍摄距离时的拍摄范围处于普通拍摄与微距拍摄之间。

■ 取消方法

将微距拍摄控制环朝着从摄像机侧看逆时针方向转动，直至微距拍摄控制杆自动恢复到原来位置。

其 它 功 能

■VTR 开关

注：摄像机支持VTR开关功能时才可使用VTR开关。

操作这个开关可启动或停止与摄像机连接的VTR。

注：如果适当设定功能和模式转换开关，则VTR开关可用作快速变焦开关或快速变焦和自动导航变焦开关。（参阅15页）

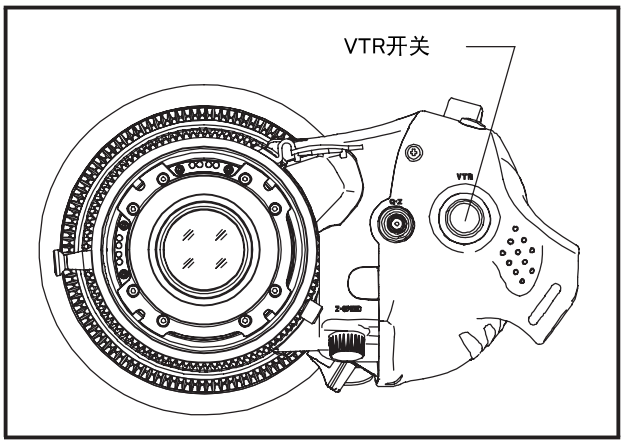

■ 回放开关

注：摄像机支持回放开关功能时才可使用回放开关。

当按下这个开关时，可以从摄像机取景器中看到回放的录像画面。

注：如果适当设定功能和模式转换开关，则回放开关可用作快速变焦开关或快速变焦和自动导航变焦开关。（参阅15页）

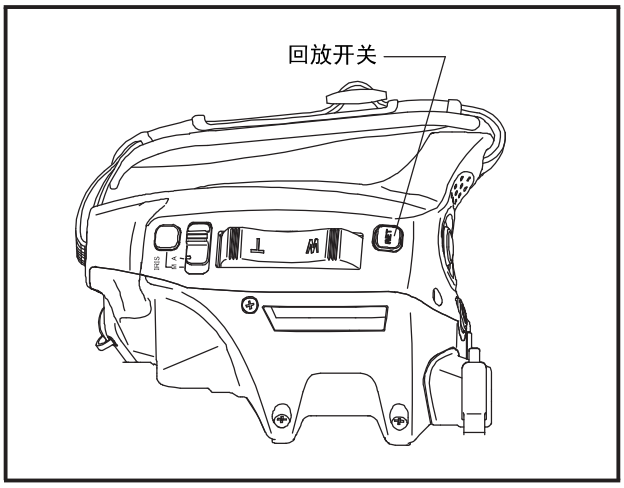

■扩展插口

该插口可用于以下 2 种用途。

(1) 使用个人电脑控制镜头时。

(2) 使用作为虚拟系统的镜头时。
（输出编码器信号。）

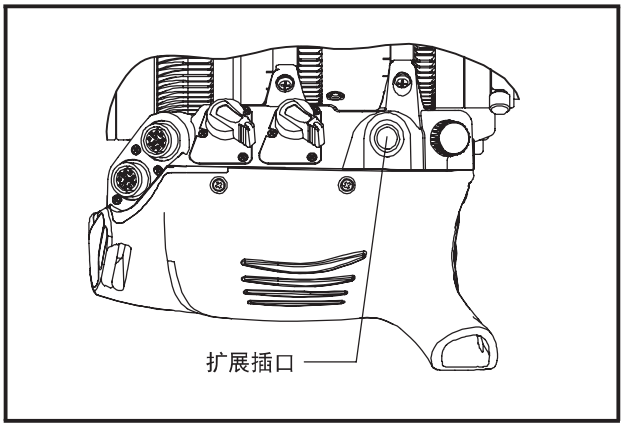

■数据接口(ARRI LDS、Cooke /i)

本镜头支持与摄像机之间的数据接口 “ARRI LDS”及“Cooke /i”。利用LDS、 /i 切换开关进行数据接口方式的切换（请参照15页）。

连接器的端子布局

本机的连接器的端子布局和功能如下。

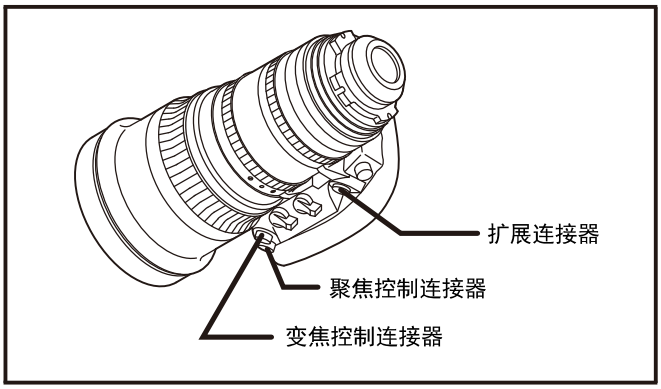

■ 聚焦控制连接器

HR10G-10R-12S (HIROSE)



	SIGNAL	
1	+V	(+12V DC)
2	GND	GND
3	COM+V	(7.5V DC)
4	COM (5.0V DC)	(5.0V DC)
5	COM-V	(2.5V DC)
6	FOCUS DEMAAND DETECT	(ANALOG DEMAND= +12V , DIGITAL DEMAND = 5V)
7	FOCUS CONTROL	(Far = 7.5V , Near = 2.5V) / RS485 B
8	FOCUS POSITION	(Far = 2.5V , Near = 7.5V) / RS485 A
9	RESERVED	
10	N.C.	
11	N.C.	
12	N.C.	

■ 变焦控制连接器

HR10G-10R-12S (HIROSE)



	SIGNAL	
1	+V	(+12V DC)
2	GND	GND
3	COM+V	(7.5V DC)
4	COMMON	(5.0V DC)
5	COM-V	(2.5V DC)
6	ZOOM DEMAAND DETECT	(ANALOG DEMAND= OPEN , DIGITAL DEMAND = 5V)
7	ZOOM CONTROL	(WIDE = 7.5V , TELE = 2.5V) / RS485 B
8	ZOOM POSITION	(WIDE = 2.5V , TELE = 7.5V) / RS485 B
9	VTR SW	
10	VTR SW COM	
11	RET SW	
12	RET SW COM	

■ 扩展连接器

HR25-9R-20S (HIROSE)

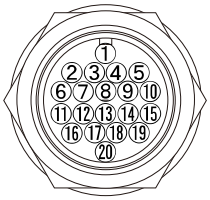

	SIGNAL	
1	+V	(+12V)
2	GND	
3	TxD	(RS-232C)
4	+5V	(1kΩ)
5	DTR	(RS-232C)
6	DSR	(RS-232C)
7	RxD	(RS-232C)
8	IRIS CONTROL	(F2.8 = 6.2V / F16 = 3.4V)
9	VTR SW	OFF＝OPEN / ON＝0V
10	RET SW	OFF＝OPEN / ON＝0V
11	IRIS POSITION	F2.8＝6.2V / F16＝3.4V
12	IRIS AUTO/REMOTE	AUTO＝0V / REMOTE＝5V
13	ZOOM POSITION	WIDE＝2V / TELE＝7V
14	EXT SIGNAL	×2＝L (＜0.5V)
15	TxD (カメラ)	(CAMERA)
16	ZOOM(A)	
17	ZOOM(B)	
18	FOCUS(A)	
19	FOCUS(B)	
20	RxD (カメラ)	(CAMERA)

功能和模式选择开关说明

这个镜头的各种按钮可按所表示的功能转换来使用，功能的转换可利用驱动部的功能和模式转换开关来设定。取下驱动部件前部的方形橡胶盖就可以看到功能和模式转换开关。

功能和模式选择开关

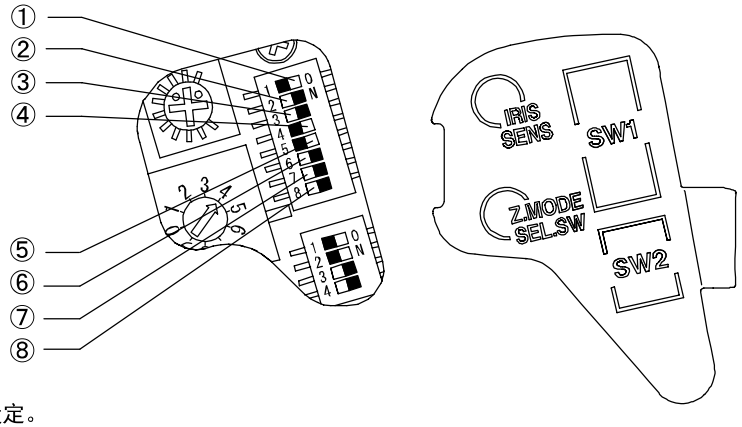

本图显示出厂时的位置设定。

①	快速变焦 ON/OFF 开关	⑤	自动导航变焦 ON/OFF 开关
②	VTR → 快速变焦选择开关	⑥	预备开关
③	回放 → 快速变焦选择开关	⑦	光圈 A-M 位置切换开关
④	光圈初始设定　自动/手动切换开关	⑧	预备开关

① 快速变焦 ON/OFF 开关

这个开关可将快速变焦和自动导航变焦功能在 ON 和 OFF 之间切换。

② VTR → 快速变焦选择开关

这个开关可将 VTR 开关功能改变为快速变焦开关功能。
（变焦遥控把手部件或连接到镜头的摄影盒中的 VTR 开关功能也将改变为快速变焦开关功能。）

③ 回放 → 快速变焦选择开关

这个开关可将回放开关功能改变为快速变焦开关功能。
（变焦遥控把手部件或连接到镜头的摄影盒中的回放开关功能也将改变为快速变焦开关功能。）

④ 光圈初始设定　自动/手动切换开关

是对接通电源时，光圈初始设定是以自动还是手动方式进行加以切换的开关。该功能不受光圈模式切换开关影响，按以下方式工作。

- ON : 自动
- OFF : 手动

⑤ 自动导航变焦 ON/OFF 开关

这个开关可将自动导航变焦功能在 ON 和 OFF 之间切换。如果这个开关为OFF，任何设为自动导航变焦的操作都无法执行自动导航变焦。

⑥ 预备开关

预备用开。

⑦ 光圈 A－M 位置转换开关

在光圈模式转换旋钮中设定的自动光圈模式和手动光圈模式的位置可通过这个开关转换。

⑧ 预备开关

预备用开。

功能和模式选择开关

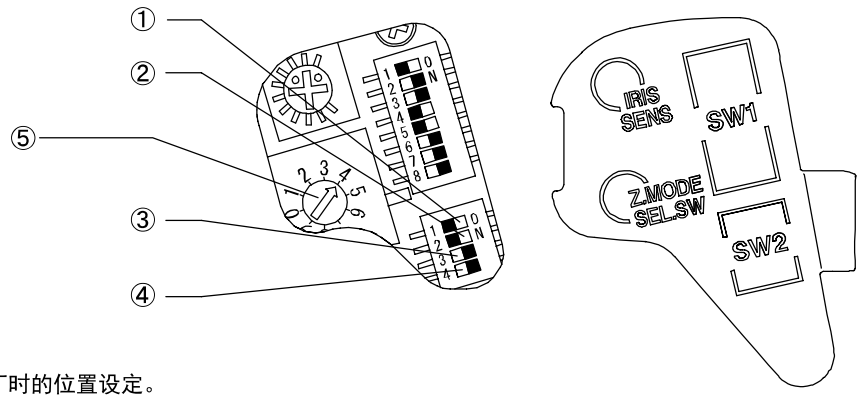

本图显示出厂时的位置设定。

①	摄象机通信ON/OFF 开关
②	LDS、/i 切换开关
③	模拟变焦功能
④	预备开关
⑤	变焦模式选择钮

① 摄象机通信 ON／OFF 开关

此开关可使摄像机与串行通信在 ON 或 OFF 之间切换。

注：当因串行通信引发异常时，请将开关切换至 OFF。

② LDS、/i 切换开关

是将与摄像机之间的数据接口方式切换为 ARRI LDS 或 Cooke /i 的开关。

- ON ： ARRI LDS
- OFF： Cooke /i

③ 模拟变焦功能

在使用模拟变焦控制器进行变焦操作时，此开关可使变焦模式功能（根据变焦控制信号来改变变焦速度的功能）在ON 或 OFF 之间切换。

④ 预备开关

预备用开关。

⑤ 变焦模式选择钮

“变焦速度对压板式变焦控制杆转动角的特性选择钮”特性共有 10 种选择。请参阅以下数值：

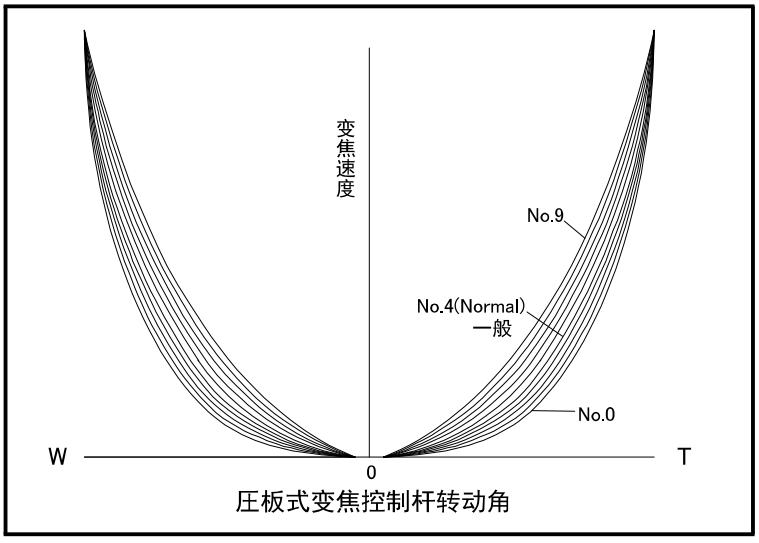

压板式变焦控制杆转动角

■ 开关功能一览表

这些开关（回放开关、VTR 开关、快速变焦和自动导航变焦开关以及光圈模式转换开关）的功能可以通过功能和模式转换开关的设定组合来改变为其它功能。请参阅下表。

◎ 回放开关

功能和模式转换开关的设定		回放开关的功能
Sw1-3	Sw1-5	
RET→快速变焦	自动导航变焦 ON	
OFF	—	回放开关
ON	ON	快速变焦和自动导航变焦开关
ON	OFF	快速变焦开关

◎ VTR开关

功能和模式转换开关的设定		VTR开关的功能
Sw1-2	Sw1-5	
VTR→快速变焦	自动导航变焦 ON	
OFF	—	VTR开关
ON	ON	快速变焦和自动导航变焦开关
ON	OFF	快速变焦开关

◎ 快速变焦和自动导航变焦开关

功能和模式转换开关的设定		快速变焦和自动导航变焦开关的功能
Sw1-1	Sw1-5	
快速变焦 ON	自动导航变焦 ON	
ON	ON	快速变焦和自动导航变焦开关
OFF	OFF	无功能
ON	OFF	快速变焦开关
OFF	ON	自动导航变焦开关

◎ 光圈模式转换开关

功能和模式转换开关的设定	光圈模式选择开关
Sw1-7	
光圈:A-M切替	
OFF	A（自动）在手一侧，M（手动）在镜头一侧。 （出厂时设定的标准位置）
ON	M（手动）在手一侧，A（自动）在镜头一侧。 （贴上镜头附带的模式指示标签）

光 圈 调 节

在出厂时，已如图进行了设置，因某些原因出现异常时，可按照以下的要领进行调整。

取下驱动部件前部的盖就可以看到部件内的调节钮。使用小螺丝刀或类似工具旋转调节钮。

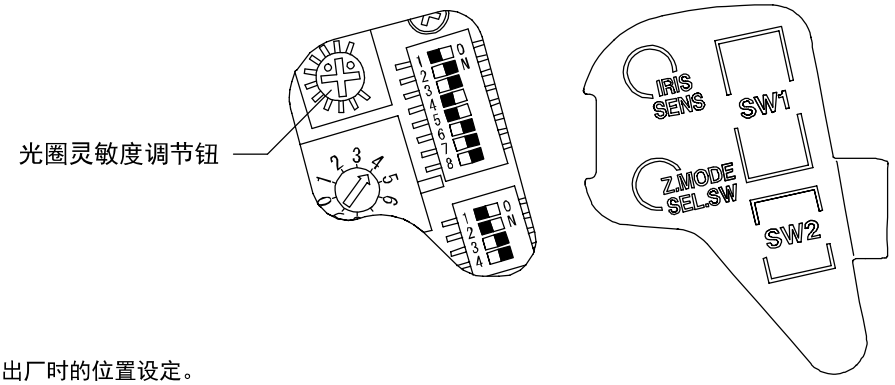

本图显示出厂时的位置设定。

■ 光圈灵敏度调节

顺时针旋转光圈灵敏度调节钮可调高感光度；逆时针转动则调低感光度。感光度较高时，应注意避免光圈抖动情况。

驱 动 部 的 装 卸 方 法

本镜头采用驱动部可从镜筒（镜头主体）分离的构造。拍摄时如果只想要使用镜筒，请按照“卸下”项目（参照19页）的要领从镜筒卸下驱动部。另外，要再装上时，请按照“安装”项目（参照20页）的要领进行。

注：要再装上驱动部时，务必搭配同一序列号。如果搭配不同序列号，可能会出现运转不正常的情况。

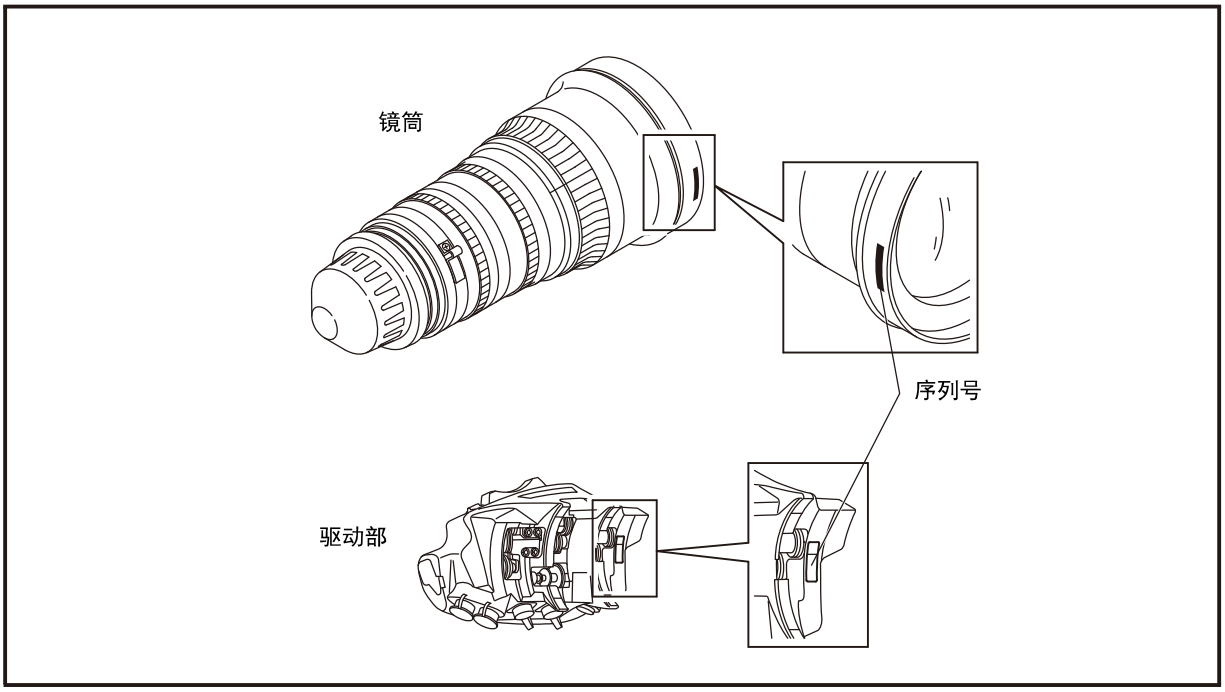

■卸 下

关闭供给镜头的电源。

① 支撑住驱动部，并卸下固定镜筒和驱动部的4颗螺钉。为防止掉落，请务必用手支撑住驱动部。

② 为防止卸下的4颗螺钉弄丢，请将其安装到驱动部的镜筒侧面上4处螺钉保留孔中。请将驱动部放入随附的袋中保管。

③ 将盖子装到镜筒侧面的连接器上。

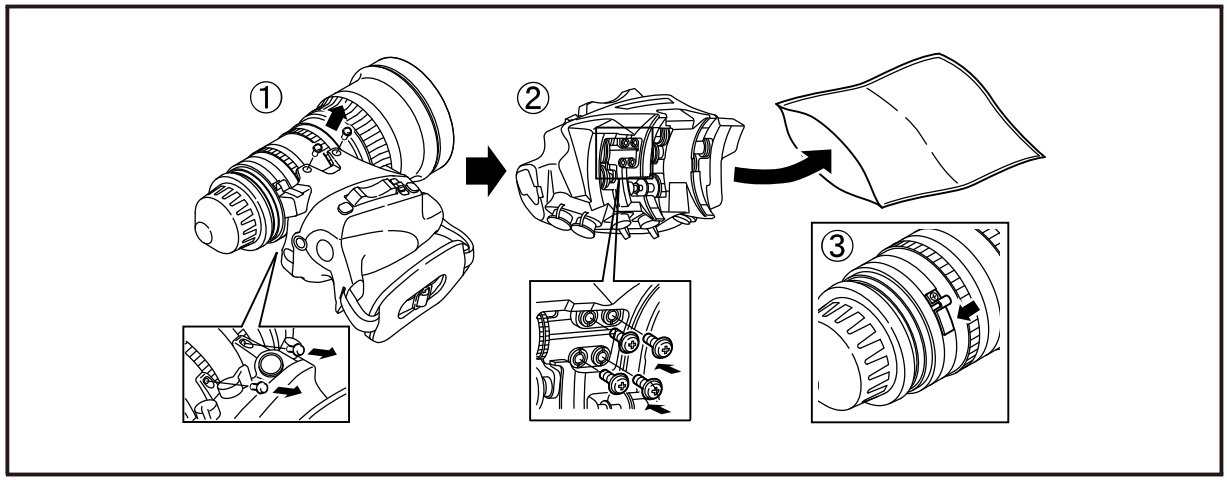

■安 装

Ⅰ 准备

① 卸下装在驱动部的螺钉保留孔中的4颗螺钉。
② 旋转对应于聚焦、变焦、光圈各部的黑色齿轮，使白色齿轮的凸部分对齐到各处的白色标记的位置。

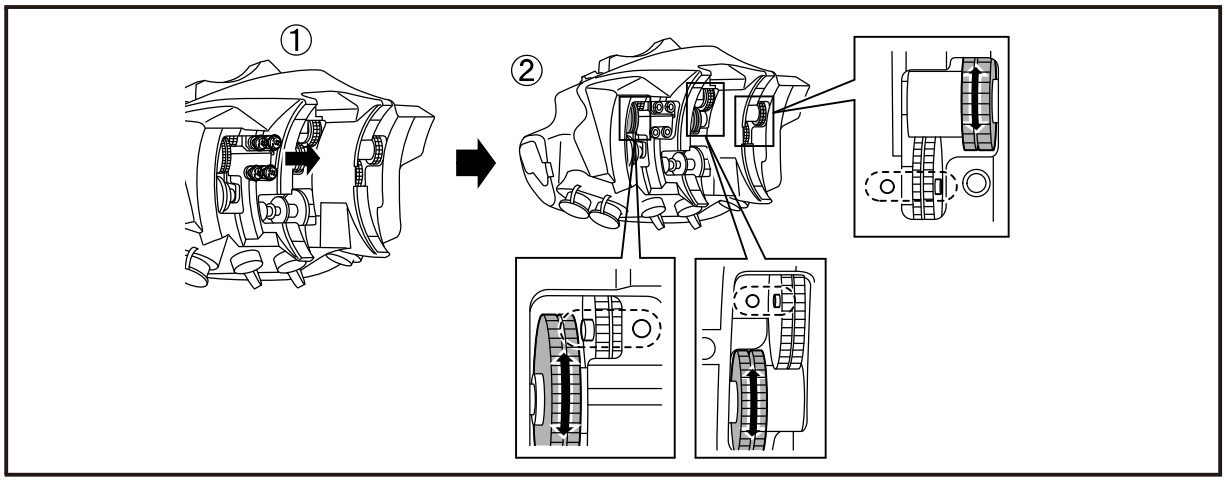

Ⅱ 环的设置

手动旋转镜筒的聚焦到达无限远端(∞ 端)，变焦到达长焦端(TELE端)，光圈到达全开(OPEN端)。

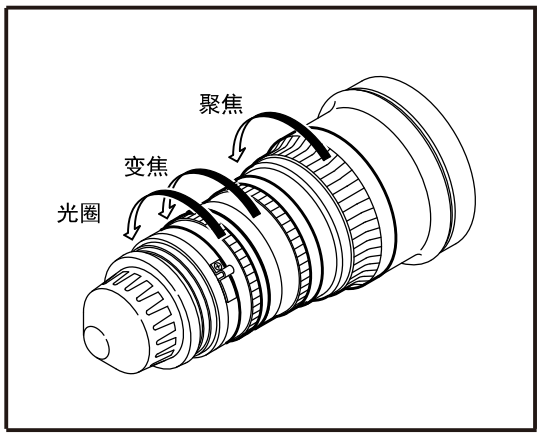

Ⅲ 设置

关闭供给镜头的电源。

① 卸下镜筒侧面上连接器的盖子。
② 对齐驱动部和镜筒的连接器、驱动部的镜筒侧上的定位销和镜筒的定位孔，并使其紧合。
③ 保持镜筒和驱动部紧合的状态，旋转镜筒的聚焦、变焦、光圈各环2个刻度左右，使驱动部侧的齿轮与镜筒侧的齿轮切实地啮合。

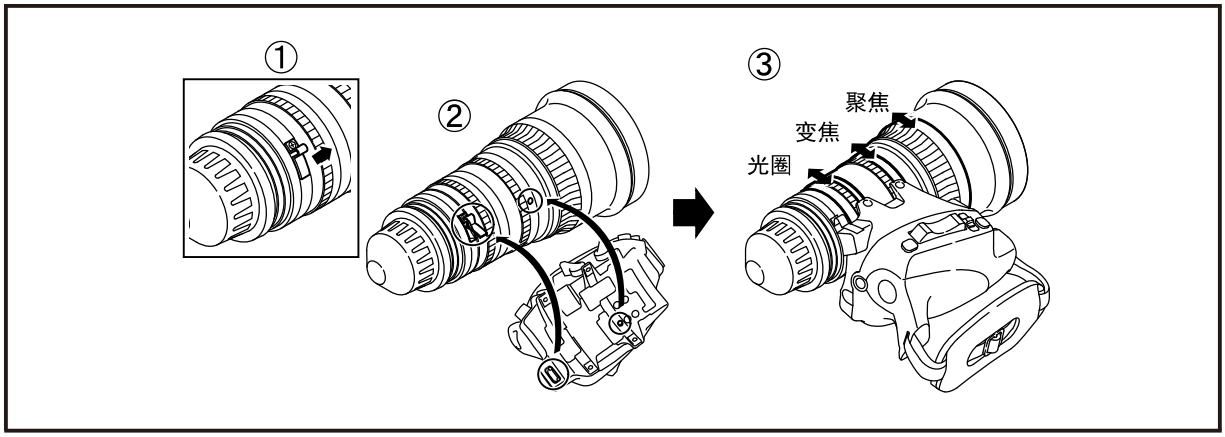

■安 装

Ⅳ 结合

保持镜筒和驱动部结合的状态横向放置，装上4颗螺钉，使驱动部固定在镜筒上。

注：请勿使用随附以外的螺钉。
紧固螺钉的扭矩不要超过80Ncm。

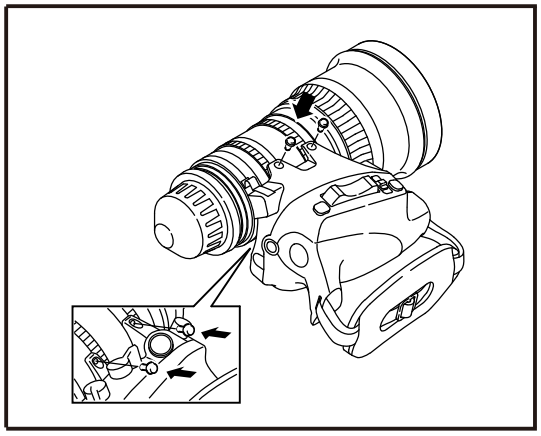

Ⅳ 初始化设定

初始化镜头和驱动单元。

① 将变焦和聚焦的伺服/手动切换旋钮设到“S”。
② 同时按下“VTR”和“RET”开关，保持不松手，之后打开供给镜头的电源，待变焦环开始旋转时可松开“VTR”和“RET”开关。（驱动部前面的 LED 灯点亮，各环将按变焦、聚焦、光圈的顺序旋转，进行镜头的初始设定。初始化设定完成之后 LED 灭灯）
③ 请关闭并重新打开电源。

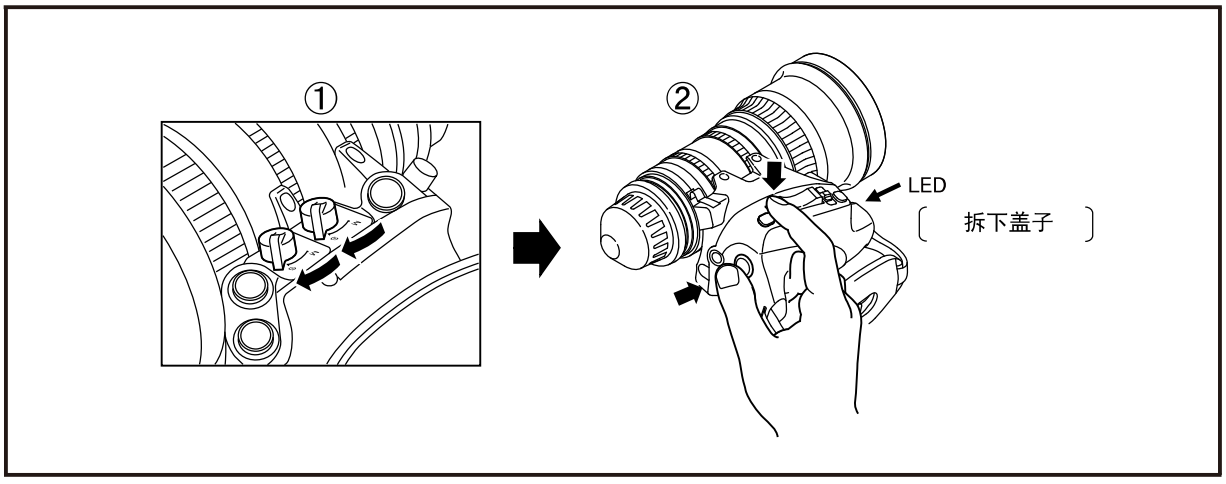

聚焦环的更换与光轴调整

本镜头备有不同单位显示的聚焦环（meter 或 feet，另售）。
可按下述步骤调换为要安装的聚焦环。

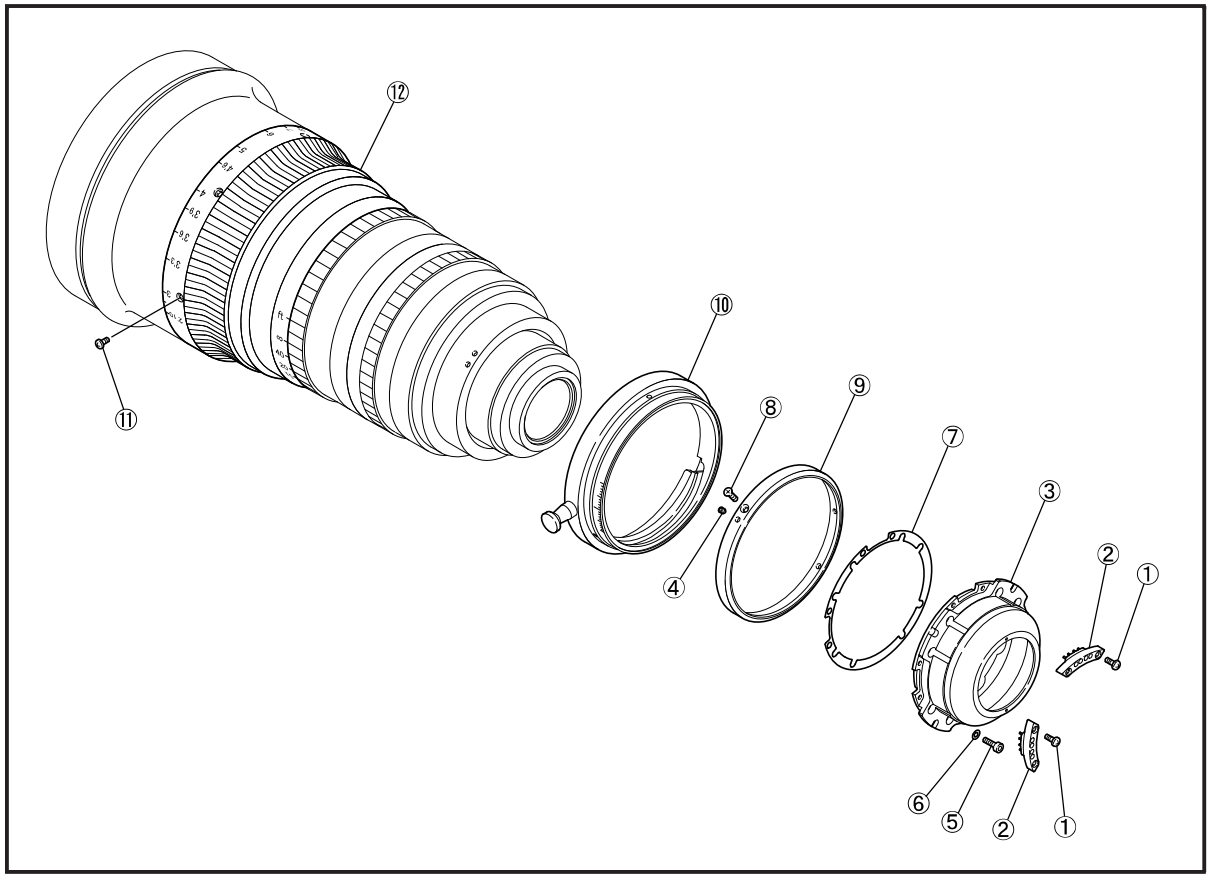

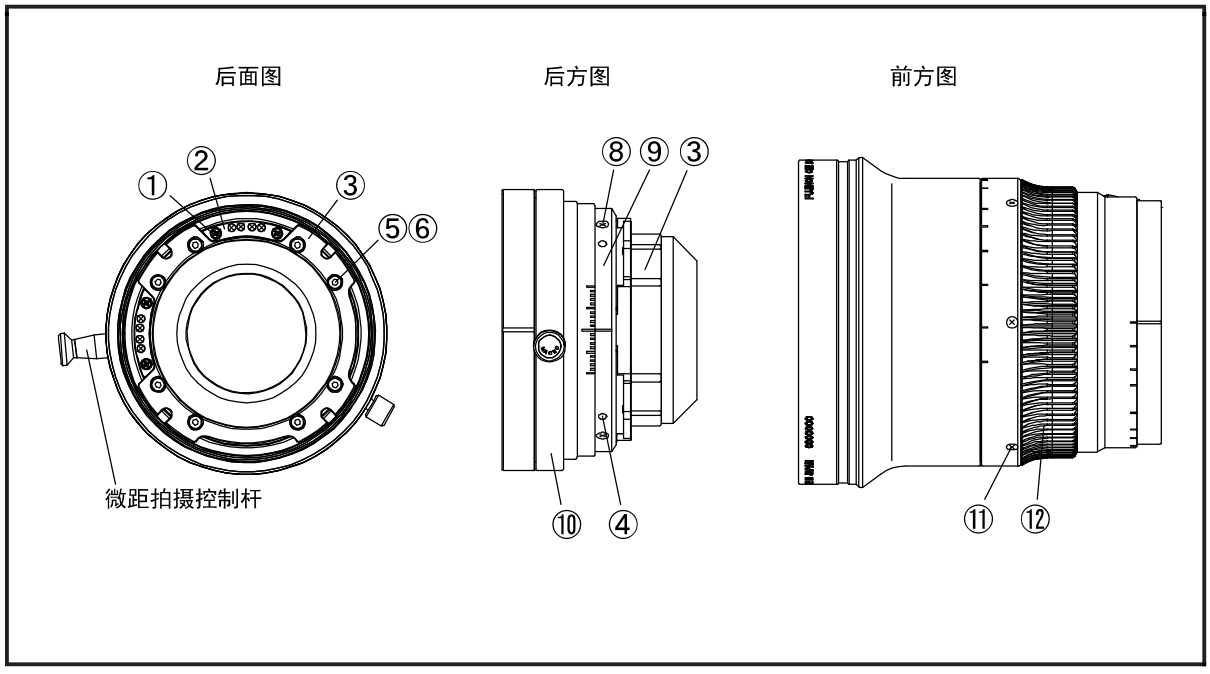

(1) 聚焦环的更换

可按下述步骤调换为要安装的聚焦环。

a. 拆下驱动部分。(请参照第19页“驱动部的装卸方法”)
b. 拆下4个螺丝 ①，然后从安装环 ③ 上拆下2个连接器 ② 。
c. 使用六角螺丝刀(尺寸:0.89mm)稍稍松动4个光轴调整螺丝 ④ 中的 2个相邻螺丝。
d. 拆下8个螺丝 ⑤ 与8个弹簧垫圈 ⑥，然后拆下安装环 ③ 与垫圈 ⑦ 。
e. 拆下4个螺丝 ⑧，然后拆下分度环 ⑨ 。
f. 拉住微距拍摄控制杆，同时将微距拍摄控制环 ⑩ 朝着从安装环看顺时针方向转动到最大位置。
g. 拉住微距拍摄控制杆，同时拆下微距拍摄控制环 ⑩ 。
h. 拆下6个螺丝 ⑪，然后拆下聚焦环⑫ 。
i. 安装新的聚焦环 ⑫(另售)，然后安装6个螺丝 ⑪ 。
j. 拉住微距拍摄控制杆，同时安装微距拍摄控制环 ⑩，然后转动到从安装环侧看逆时针方向最大位置。
k. 将分度环 ⑨ 紧压在微距拍摄控制环 ⑩侧，同时安装4个螺丝 ⑧ 。
l. 安装垫圈 ⑦ 、安装环 ③ 、8个弹簧垫圈 ⑥以及8个螺丝 ⑤，然后轻轻地紧固8个螺丝 ⑤ 。
m. 紧固2个在步骤‘c’松动的光轴调整螺丝 ④ 。
n. 紧固8个螺丝 ⑤，固定安装环 ③ 。
o. 安装4个螺丝 ①，将2个连接器 ② 固定到安装环 ③ 上。
p. 将镜头安装到摄像机上，并确认光轴。(请参照下页的“光轴确认”。)
请根据需要进行调整。
q. 安装驱动部分。(请参照“驱动部分的装卸方法”)

(2) 光轴的调整

该调整用于将镜头的光轴对准摄像机的光轴。

■ 光轴确认

a. 将变焦置于远端，然后调整摄像机，使拍摄对象位于取景器的中心。

b. 将变焦移动到最广端，确认拍摄对象位置。
如果位于取景器中心的拍摄对象未移动，则表明光轴已对准。
如果移动，表明光轴未对准，需要进行下述“调整”。

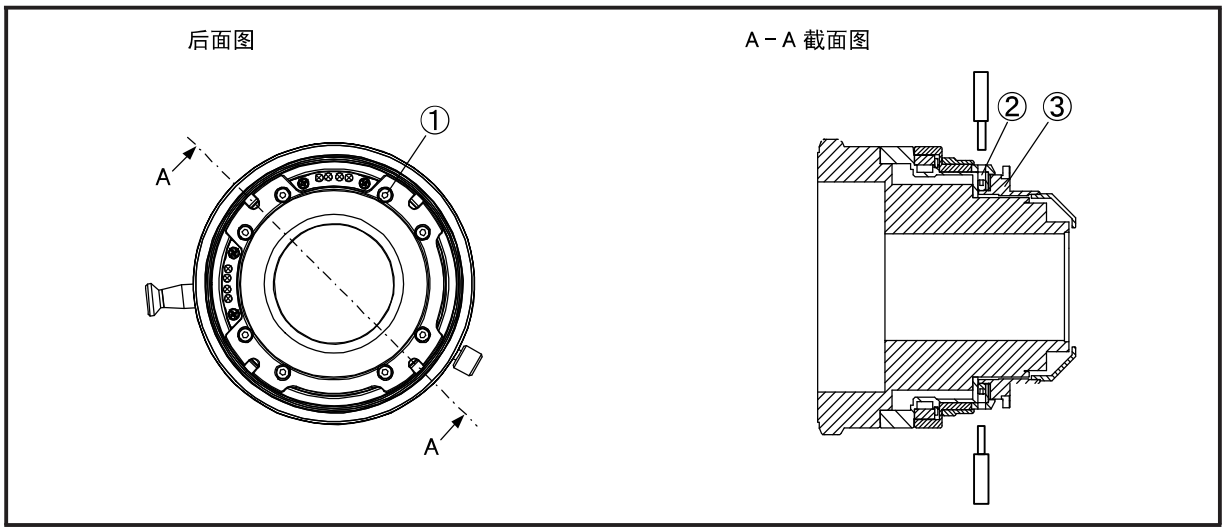

■ 调 整

a. 稍稍松动 8 螺丝① 。
b. 将镜头安装到摄像机上。
c. 进行操作，将变焦置于远端。
d. 调整摄像机，使拍摄对象位于取景器的中心。
e. 进行变焦操作，将变焦置于最广端。
f. 确认拍摄对象是否保持在取景器的中心。
偏移时，使用六角螺丝刀（0.89mm）调整 4 个光轴调整螺丝②，以使其一致。
g. 将变焦返回到远端，确认拍摄对象是否保持在取景器的中心。
（偏移时，再次进行步骤‘c’～‘e’。）
h. 调整完成之后，从摄像机上拆下镜头，并紧固8个螺丝① 。
i. 最后确认4个光轴调整螺丝② 已可靠紧固。

保 养 / 点 检

■ 清洁镜头

在市场上购买镜头清洁液和镜头清洁纸。

a. 首先使用柔软毛刷或气刷清除镜头表面的灰尘。

b. 将镜头清洁纸折成合适大小，然后浸入清洁液。将湿水部分卷成螺旋状，轻轻由中间向四周擦拭镜头。使用新的镜头清洁纸重复这项操作，直至镜头彻底清洁。

■ 消除水汽

镜头主体受湿后，首先立即用清洁干布擦除镜头外部的水。
然后与干燥剂一起封入塑料袋中以消除内部的水汽。

■ 保 存

如果镜头长时间不使用时，应避开高温、潮湿或有腐蚀气体的环境保存。

■ 检 查

如果镜头出现异常情况，请联系我们的销售代理商。

为了长期保持产品的高性能，建议您定期检查，至少每年一次。
请注意，我们可能无法检查和修理用户改装过的产品。

规　　格

项目 ＼ 型 号		ZK2.5×14 -SAFB/SAMB	ZK4.7×19 -SAFB/SAMB	ZK3.5×85 -SAFB/SAMB
卡 口		PL 卡口		
焦 距		14 ～ 35 mm	19 ～ 90 mm	85 ～ 300 mm
变焦倍率		2.5×	4.7×	3.5×
最大感光孔径	（T No.）	T2.9	T2.9	T2.9 (85～218mm) ～T4.0 (300mm)
光圈范围		T2.9 ～ T22、关闭		
画面尺寸		27.45 × 15.44 mm（φ31.5 mm） 宽高比　1.78 : 1		
后基距长（拍摄时）		52 mm （可调节范围 : ±0.2 mm）		
最小物距（自聚集面） * [微距拍摄为]		0.6 m / 2 ft [0.33m / 13 in]*	0.85 m / 2 ft 10 in [0.37 m / 15 in]*	1.2 m / 4 ft [0.97 m / 3 ft 2 in]*
视 角 （水平×垂直）	最广角端 最长焦端	88.9° × 57.8° 42.8° × 24.9°	71.7° × 44.2° 17.3° × 9.8°	18.7° × 10.4° 5.2° × 3.0°
最小物距下的拍摄范围	最广角端 最长焦端	70 mm × 394 mm 275 mm × 155 mm	917 mm × 516 mm 193 mm × 109 mm	274 mm × 154 mm 79 mm × 44 mm
镜头的有效孔径	前 后	81.12 mm 26.50 mm	86.4 mm 27.86 mm	85.0 mm 34.5 mm
镜头前口径		φ114 mm		
全长		231 mm	226 mm	249 mm
聚焦操作角度		200°		
聚焦操作角度		120°		
光圈控制		伺服或手动		
变焦控制		伺服（操作时间: 1.2 ～ 45 秒） 或手动		
聚焦控制		手动 （内置伺服操作用电机）		
输入电压		10 ～ 36 VDC （使用摄像机连接器时） 10 ～ 30 VDC （使用扩展连接器时）		
电流消耗（12V 直流电）	（静态） （最大）	大约 200 mA 950 mA		
重 量	有驱动部件 无驱动部件	大约 2.9 kg 大约 2.4 kg	大约 2.8 kg 大约 2.3 kg	大约 3.1 kg 大约 2.6 kg

技術資料
TECHNICAL DRAWINGS
技术资料

①	スイッチ詳細図	SWITCH DETAIL	选择开关 详细图
②	アイリス感度調整トリマ	IRIS SENSITIVITY ADJUSTMENT TRIMMER	光圈灵敏度调节钮
③	機能＆モード 切替スイッチ	FUNCTION & MODE SELECT SWITCHES	功能和模式选择开关
④	ズームモード切替スイッチ	ZOOM MODE SELECT SWITCH	变焦模式选择钮
⑤	ズームコントロール用 コネクタ	CONNECTOR FOR ZOOM CONTROL	变焦控制插口
⑥	フォーカスコントロール用 コネクタ	CONNECTOR FOR FOCUS CONTROL	聚焦控制插口
⑦	バンド	HAND BAND	手带
⑧	アイリスモーメンタリ スイッチ	IRIS MOMENTARY SWITCH	光圈手动 / 自动切换开关
⑨	アイリスモード 切替スイッチ	IRIS MODE SELECT SWITCH	光圈模式选择开关
⑩	リターンスイッチ	RETURN SWITCH	回放开关
⑪	ズームシーソー コントロールレバー	ZOOM SEESAW CONTROL LEVER	压板式变焦控制杆
⑫	ズームレバー取付ねじ （6 ヵ所）	THREADED HOLES FOR ZOOM LEVER (6 PLACES)	变焦控制杆螺孔（6 个）
⑬	指標線	INDEX LINE	指标线
⑭	マクロリング	MACRO RING	微距拍摄控制环
⑮	マクロレバー	MACRO LEVER	微距拍摄控制杆
⑯	F.f 52.86 (52 IN AIR)	F.f 52.86 (52 IN AIR)	后基距 52.86 （52 拍摄时）
⑰	B.f 33.40 (32.546 IN AIR)	B.f 33.40 (32.546 IN AIR)	后焦距 33.40 （32.546 拍摄时）
⑱	GLASS ELEMENTS	GLASS ELEMENTS	玻璃透镜
⑲	アイリスリング （操作角：59°）	IRIS RING (OPERATION ANGLE: 59°)	光圈环 （操作角：59°）
⑳	アイリス歯車 モジュール 0.8 ピッチ円直径 φ81.6	IRIS GEAR MODULE 0.8 PITCH DIA φ81.6	IRIS 齿轮 模数 0.8 节距圆直径 φ81.6
㉑	ズームリング （操作角：120°）	ZOOM RING (OPERATION ANGLE:120°)	变焦环 （操作角：120°）
㉒	ズーム歯車 モジュール 0.8 ピッチ円直径 φ84	ZOOM GEAR MODULE 0.8 PITCH DIA φ84	变焦齿轮 模数 0.8 节距圆直径 φ84
㉓	フィルタ取付ねじ M111×0.75	FILTER SCREW M111×0.75	滤镜安装螺纹 M111×0.75
㉔	フォーカスリング （操作角：200°）	FOCUS RING (OPERATION ANGLE:200°)	聚焦环 （操作角：200°）
㉕	フォーカス歯車 モジュール 0.8 ピッチ円直径 φ93.6	FOCUS GEAR MODULE 0.8 PITCH DIA φ93.6	聚焦齿轮 模数 0.8 节距圆直径 φ93.6
㉖	フォーカスサーボ / マニュアル 切替つまみ	FOCUS SERVO / MANUAL SELECT KNOB	聚焦伺服/手动切换旋钮
㉗	ズームサーボ / マニュアル 切替つまみ	ZOOM SERVO / MANUAL SELECT KNOB	变焦伺服/手动选择旋钮
㉘	拡張用コネクタ	CONNECTOR FOR EXPANSION	扩展插口
㉙	カメラ用コネクタ	CONNECTOR TO CAMERA	摄像机连接插口
㉚	マウント	MOUNT	卡口
㉛	VTR スイッチ	VTR SWITCH	VTR 开关
㉜	クイックズーム＆オートクルージングズームスイッチ	QUICKZOOM & AUTO CRUISING ZOOM SWITCH	快速变焦和自动导航变焦开关
㉝	ズーム最大スピード調節つまみ	ZOOM MAXIMUM SPEED CONTROL KNOB	最大变焦速度控制旋钮
㉞	F.f 固定つまみ	F.f LOCKING KNOB	后焦锁定旋钮

（特別に表記がある場合を除いて）単位 : mm
(UNLESS OTHERWISE SPECIFIED) UNIT : mm
（另有规定除外）单位 : mm

※SAFB=フィート表記 / SAMB=メートル表記
※SAFB=Indications in feet / SAMB=Metric indications
※SAFB=英尺显示 / SAMB=米制显示

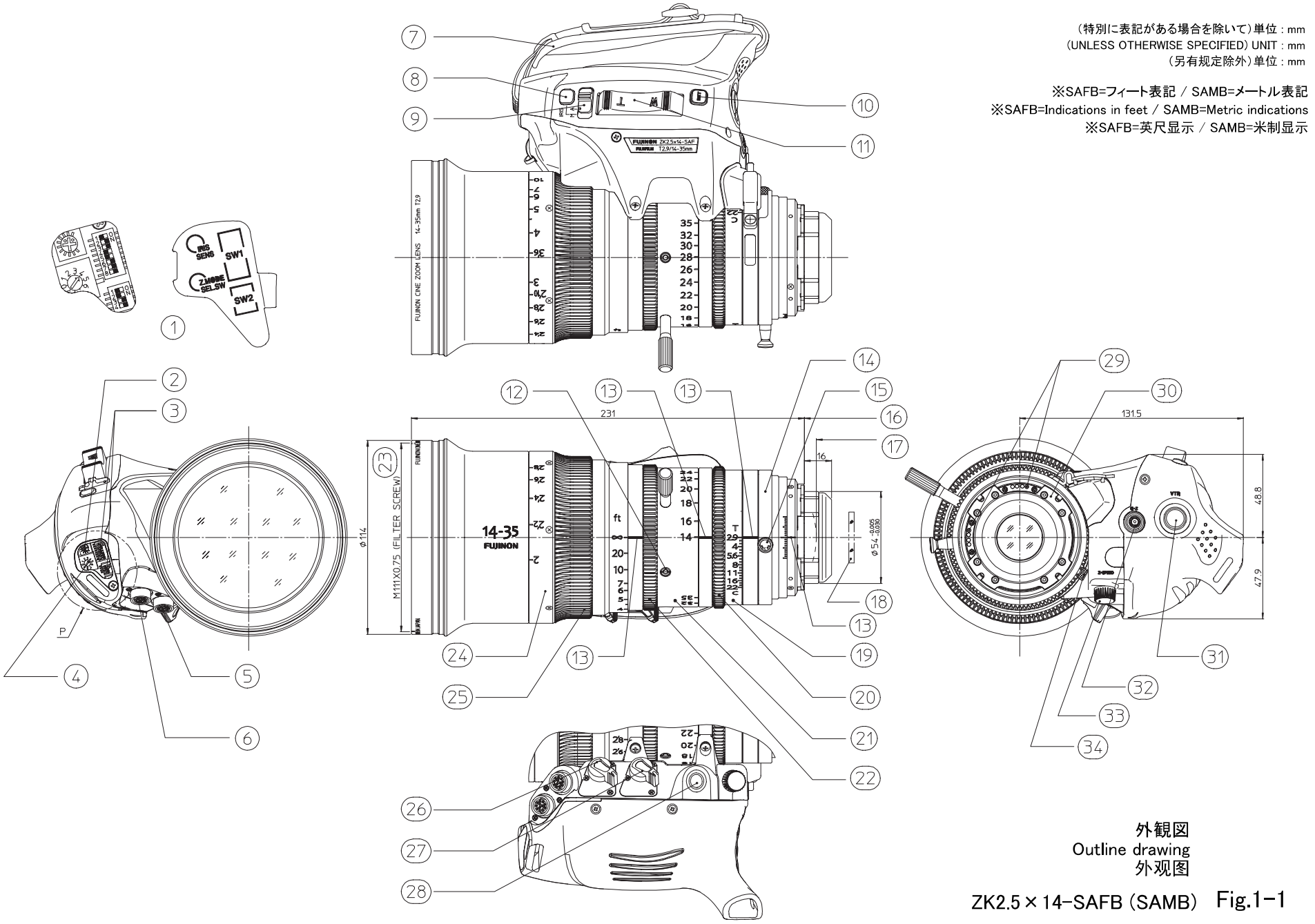

外観図
Outline drawing
外观图

ZK2.5×14-SAFB (SAMB)　Fig.1-1

（特別に表記がある場合を除いて）単位：mm
(UNLESS OTHERWISE SPECIFIED) UNIT : mm
（另有规定除外）单位：mm

※SAFB=フィート表記 / SAMB=メートル表記
※SAFB=Indications in feet / SAMB=Metric indications
※SAFB=英尺显示 / SAMB=米制显示

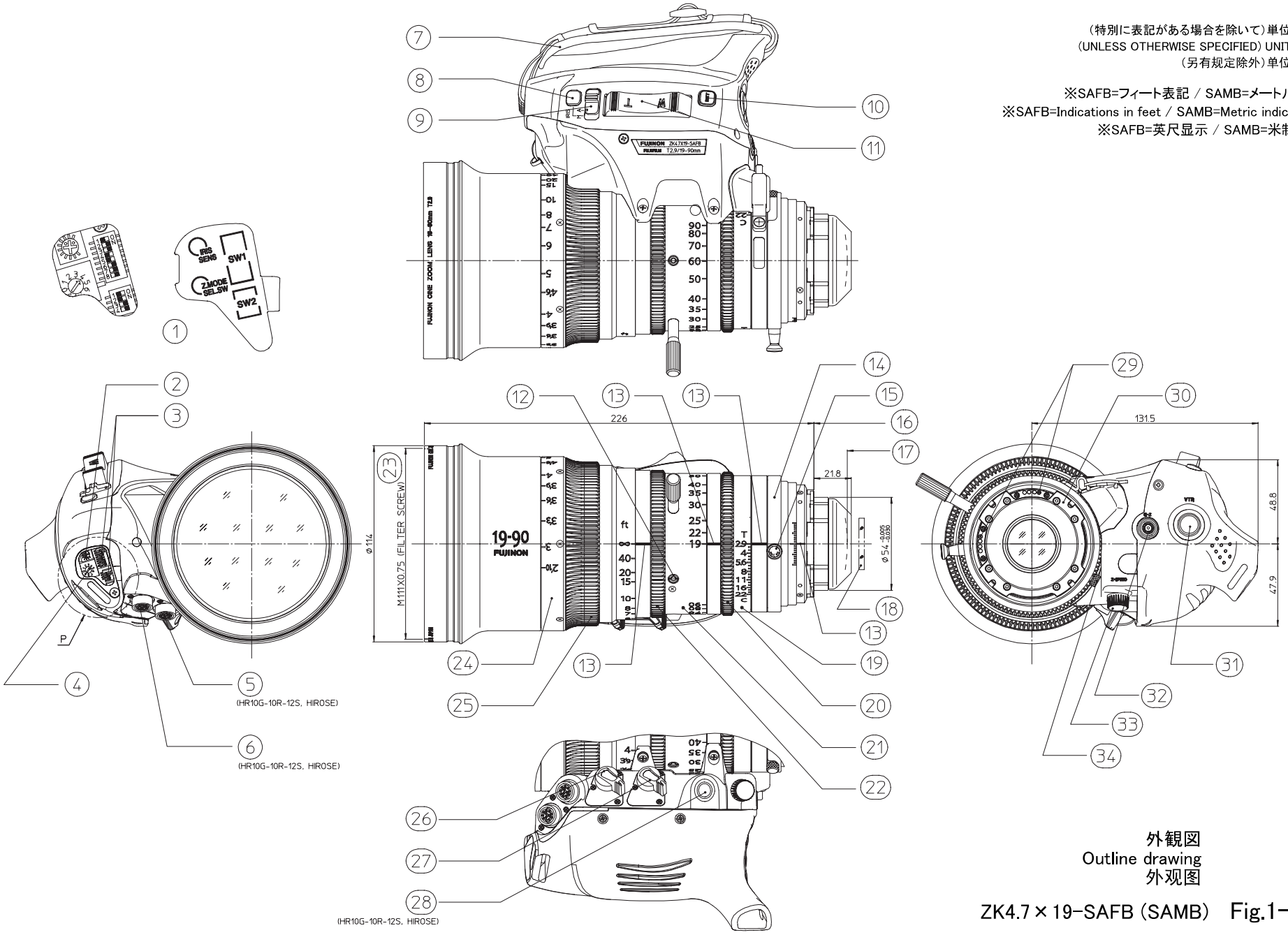

外観図
Outline drawing
外观图

ZK4.7×19-SAFB (SAMB)　Fig.1-2

（特別に表記がある場合を除いて）単位：mm
(UNLESS OTHERWISE SPECIFIED) UNIT : mm
（另有规定除外）单位：mm

※SAFB=フィート表記 / SAMB=メートル表記
※SAFB=Indications in feet / SAMB=Metric indications
※SAFB=英尺显示 / SAMB=米制显示

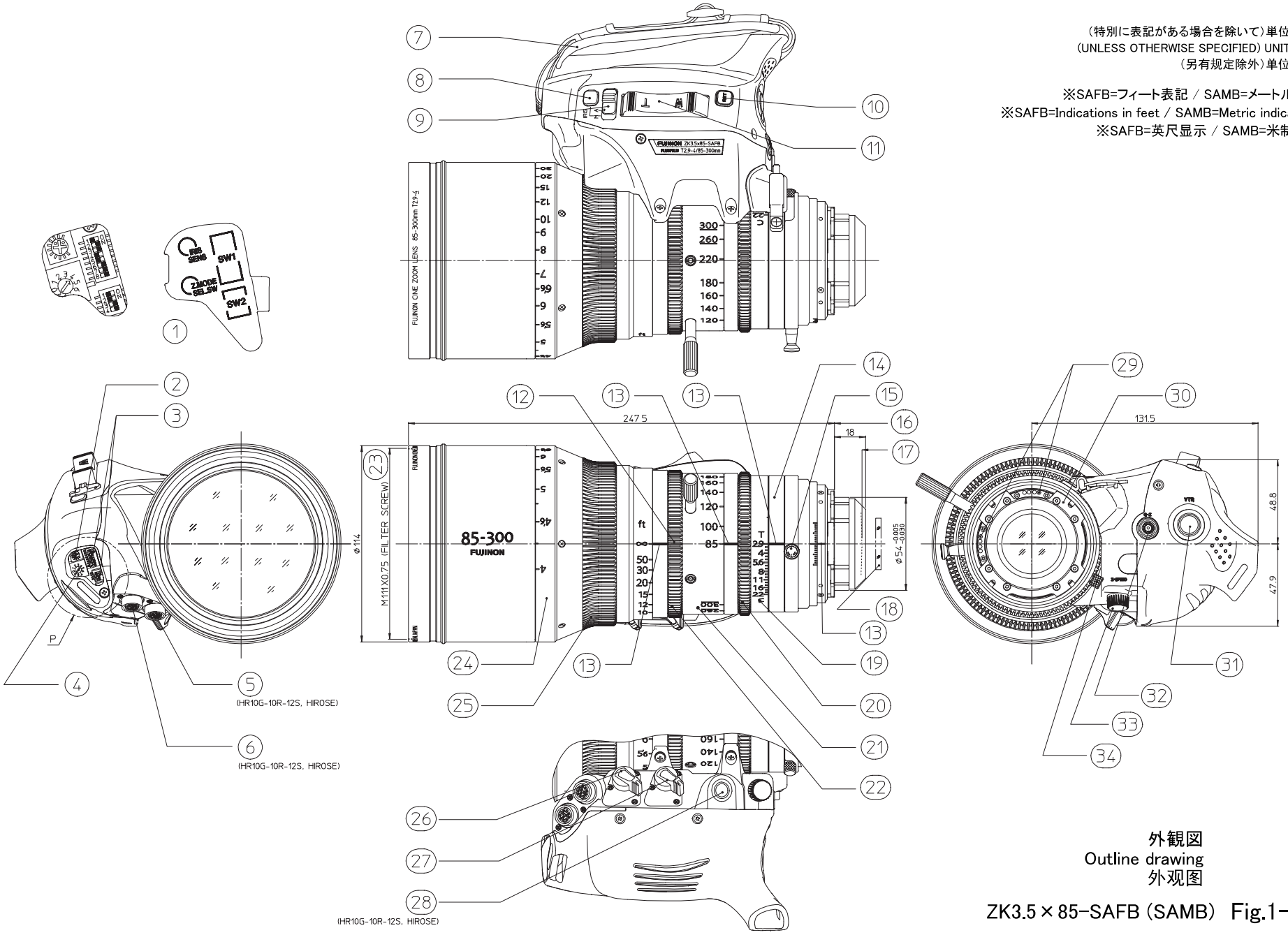

外観図
Outline drawing
外观图

ZK3.5×85-SAFB (SAMB) Fig.1-3

CUT LINE

切取線

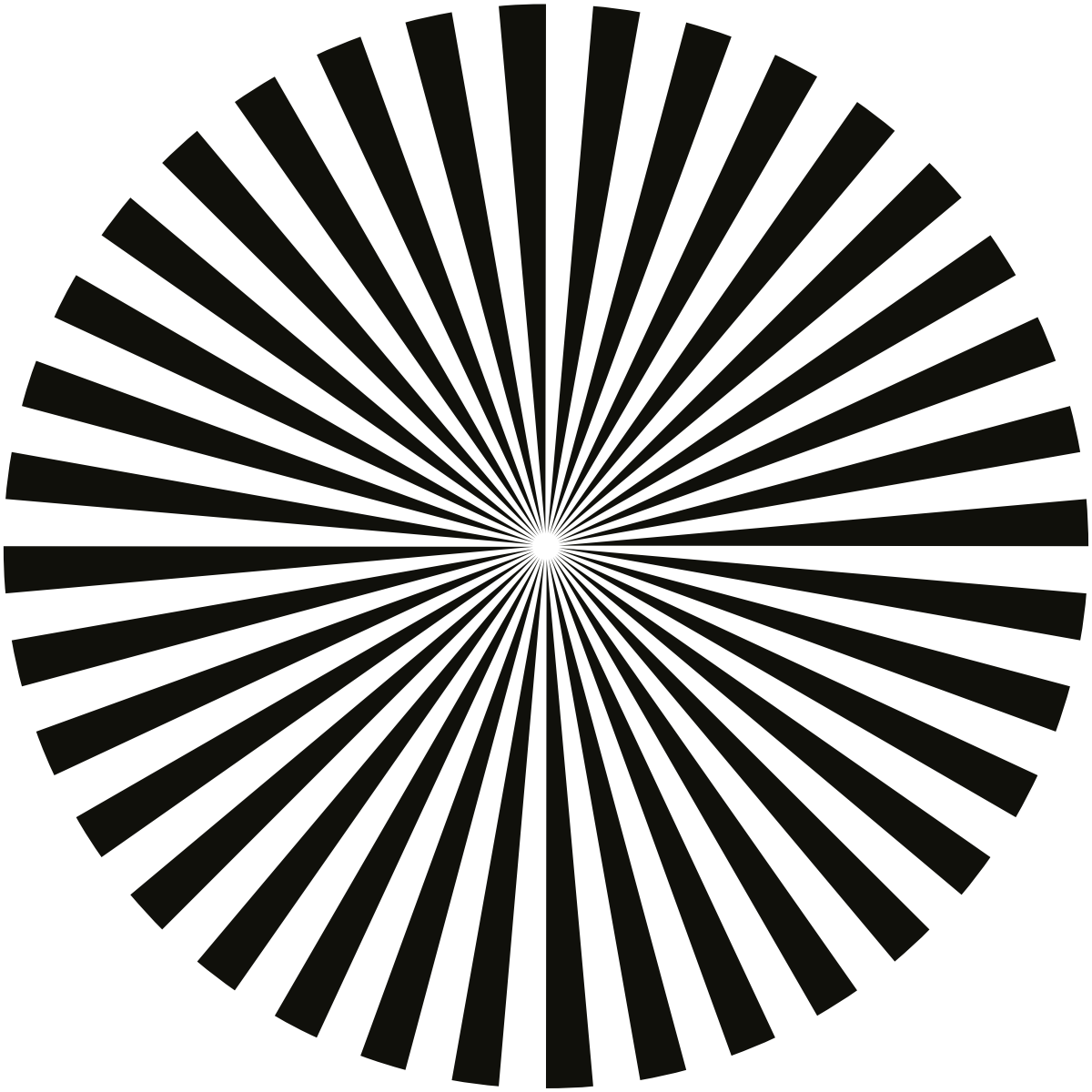

ジーメンススター / SIEMENS STAR / 西门子星标

FUJINON

Europe, Middle East, & Africa (EMEA)

FUJIFILM Europe GmbH
Optical Devices Division (EMEA Headquarters)
Heesenstr.31, 40549 Düsseldorf Germany
TEL : +49-211-5089-0
FAX : +49-211-5089 344
http://www.fujifilm.eu/eu/products/optical-devices/

FUJIFILM Europe GmbH
Optical Device EMEA Technical Service Centre
Halskestr. 4 47877 Willich Germany
TEL : +49-211-5089-0
FAX : +49-211-5089-344
Mail : optical_service@fujifilm.eu

FUJIFILM UK Ltd.
Optical Devices Division
88 Bushy Road, Raynes Park, Merton,
London SW20 0JH, UK
TEL : +44-208-944-4246
http://www.fujifilm.eu/uk/

FUJIFILM Holdings France S.A.S.
Optical Devices Division
16 rue Étienne Jules Marey – CS 80034 78391 BOIS D'ARCY CEDEX – FRANCE
TEL : +33 1 30 14 34 56
FAX : +33 1 34 60 57 45
http://www.fujifilm.eu/fr/produits
/produits-optiques/

ZAO "FUJIFILM-RU"
Optical Devices Division
1st Magistralnyi tupik 5A Business Centre
"Magistral Plaza" 4th floor c/o CJSC (ZAO)
Fujifilm-Ru 123290, Moscow, Russian Federation
TEL : +7-495-797-3512
FAX : +7-495-797-3513
http://www.fujifilm.eu/ru/produkty
/opticheskie-ustroistva/

FUJIFILM Middle-East FZE
Optical Devices Division
The Galleries Bldg. 3 8th Floor, office 809
Downtown Jebel Ali P.O. Box 17212 Dubai, UAE
TEL : +971-4-4887-8722
FAX : +971-4-4887-8733
http://www.fujifilm-mea.com/

China

FUJIFILM (China) Investment Co., Ltd.
Optical Devices Division (Headquarters)
28F, ONE LUJIAZUI, No.68 YinCheng Zhong Road,
Pudong New Area, Shanghai 200120, China
TEL : +86-21-5010-6000
FAX : +86-21-5010-6750
http://www.fujifilm.com.cn/products
/optical_devices/

FUJIFILM (China) Investment Co., Ltd.
Beijing Branch
Room 2606, No.1 Taikang financial Tower,
No.38 East Third Ring North Road, Chaoyang District , Beijing100026, China
TEL : +86-10-6539-1866 Ext. 310

FUJIFILM (China) Investment Co., Ltd.
Shenzhen Service Center
BLK2 Fushan Industry District, Qiaotou Village, Fuyong Town, Bao'An, Shenzhen, Guangdong518103,China
TEL : +86-755-8146-0435
FAX : +86-755-8346-1435

FUJIFILM Hong Kong Ltd.
Optical Device Division
Unit 1001-1007, 10/F., Metroplaza Tower 2, 233 Hing Fong Road, Kwai Fong, N.T., Hong Kong
TEL : +852-2376-0998
FAX : +852-2724-1118
http://www.fujifilm.com.hk/

North & Latin America

FUJIFILM North America Corporation
Optical Devices Division
10 High Point Drive Wayne, New Jersey, 07470-7434, United States
TEL: +1-973-633-5600
FAX: +1-973-633-5216
http://www.fujifilmusa.com/products/optical_devices/

Asia Pacific

FUJIFILM Asia Pacific Pte. Ltd.
Optical Device Division
10 New Industrial Road Fujifilm Building Singapore 536201
TEL : +65-6380-5318
FAX : +65-6383-5666
http://www.fujifilm.com.sg/en/products/business_products/optical_devices/tv/

FUJIFILM Australia Pty Ltd.
Optical Devices
114 Old Pittwater Rd Brookvale NSW 2100 Australia
TEL : +61-2-9466-2600
FAX : +61-2-9938-1975
http://www.fujifilm.com.au

Japan (World Wide Headquarters)

FUJIFILM Corporation
Optical Device & Electoric Imaging Product Div
1-324 Uetake, Kita-Ku, Saitama City, Saitama 331-9624, Japan
TEL : +81-48-668-2143
FAX : +81-48-667-7924
http://fujifilm.jp/business/broadcastcinema/lens

FUJIFILM

富士フイルム株式会社　光学･電子映像事業部
〒331-9624　埼玉県さいたま市北区植竹町1-324
TEL. 048-668-2143　FAX. 048-651-8517
http://fujifilm.jp/index.html

FUJIFILM Corporation　Optical Device & Electronic Imaging Products Div.
1-324 Uetake, Kita-ku, Saitama City, Saitama 331-9624, Japan
TEL. 81-48-668-2143　FAX. 81-48-651-8517
http://www.fujifilm.com

富士胶片株式会社　光学・电子影像事业部
331-9624 日本国琦玉县琦玉市北区植竹町 1-324
电话：+81-48-668-2143　传真：+81-48-651-8517
网址：http://www.fujifilm.com/cn

H2708001/TV　Printed in Japan