GENEINNO

Laser Scaler User Manual

User Manual EN

V1.0.1 2020.12

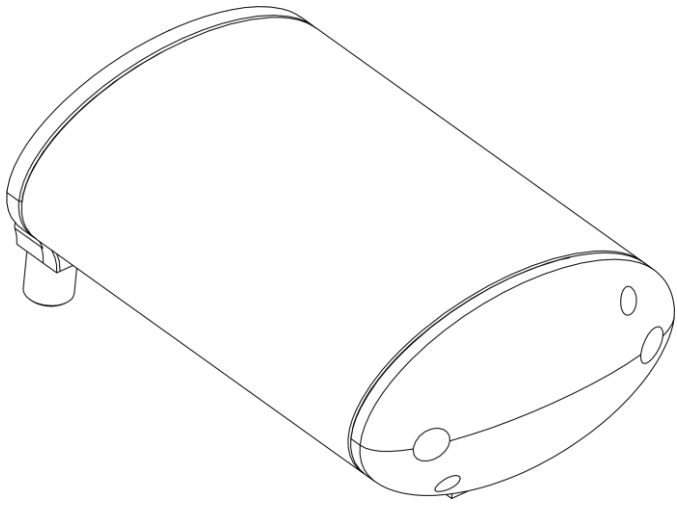

深圳市吉影科技有限公司
www.geneinno.com

1. Introduction

GT_Laser-1 The laser scaler is for measuring the underwater objects dedicated equipped for intelligent underwater robot. Connect with the unique extension interface of Geneinno Intelligent Underwater Robot through a customized watertight connector. Emit two green laser of 510-530nm, the fixed distance between the two spots is 75mm. The laser is high brightness, good monochromaticity, good directivity, and good coherence. The spot size exceeds 10mm within a distance of 10 meters.

2. Specification

Dimensions	160mm*105mm*72mm
Weight	720g(air), 200g(water)
Maximum Depth	175m(fresh water)
In-put Voltage	DC 5V
Max Electric Current	0.15A
Laser Wavelength	510-530nm
Laser Colour	Green
Spot Mode	Point no scattering
Light Spot Diameter	Less than 10mm in 10m
Working Temperature	-10℃ ~ 50℃
Interface Type	Dedicated 8-core waterproof connector
Product Adaptation	Intelligent underwater robot T1/T1 Pro dedicated

© 2020-2022 GENEINNO All Rights Reserved.

3. Usage Guidelines

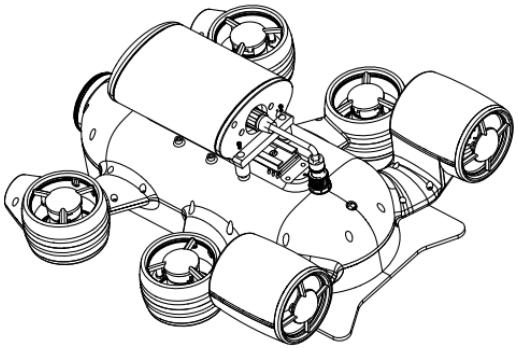

Installation

· Unscrew the sealing metal cover of the external interface of the intelligent underwater robot counterclockwise.

·Match the slot of laser to the slide rail in the bottom of the host, slide the laser according to direction indicated by the arrow and fix by screws when it in right position.

·Insert the plug of the thruster into the external interface. Tighten it clockwise.

Note: The plug has an anti-reversal insertion design, please pay attention when inserting, please do not rotate when inserting, to avoid damage to the pin and its internal structure.

Using

·After laser plugged in, APP will automatically be identified and showing the icon on the interface, it can operate by click the icon.

Note: Please refer to "Geneinno Underwater Robot T1Pro User Manual" for APP operation instructions

© 2020-2022 GENEINNO All Rights Reserved.

4. Maintenance & Precautions

Precautions:

● Before starting to use, please check all watertight connectors for water and other liquid residues, please wipe them clean before connecting
● It is strictly forbidden to shine the light on others, especially in the eyes
● Please ensure that it is forbidden to look directly at the laser emitting port at any time and under any circumstances
● It is strictly forbidden to shoot the light onto the transparent glass panel, and prevent the light source from passing through the glass panel to shine on the other side of the glass. Conventional glass has a reflectivity of about 4%, which may also cause the reflected laser light to enter the eyes and cause damage
● When working with lasers, please take off your watch to prevent the light reflected by the watch from entering your eyes and causing injury
● It is forbidden to place flammable, explosive materials and black paper, cloth, leather and other materials with low ignition point on the laser path

Maintenance instructions:
● After finishing use, please rinse with fresh water and wipe dry in time to reduce seawater corrosion and store in a dry and ventilated place
● Please use smooth tools such as cotton cloth to clean the surface of this product

© 2020-2022 GENEINNO All Rights Reserved.

Official Media



Facebook



YouTube



Wechat



Weibo

Shenzhen Geneinno Technology Co.,LTD
www.geneinno.com