

Intro

This bracket can be mounted on top or bottom of monitor. For monitors mounted more than 1100 mm above ground, mount bracket below monitor.

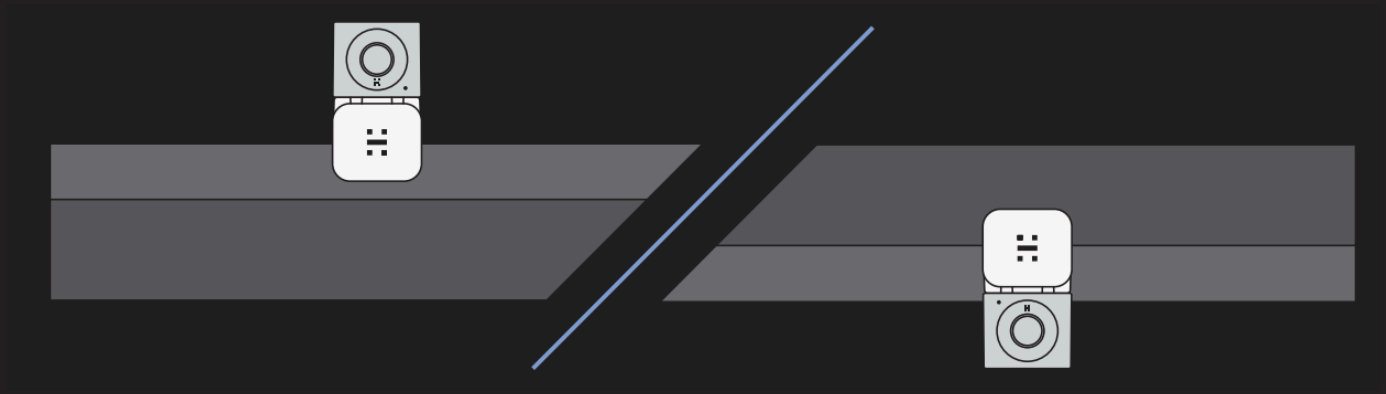

Measurements

Maximum thickness of screen 62 mm, minimum 10 mm. Minimum depth from front of screen to wall is 78 mm.



1. Set depth

Choose the configuration that fits your screen .

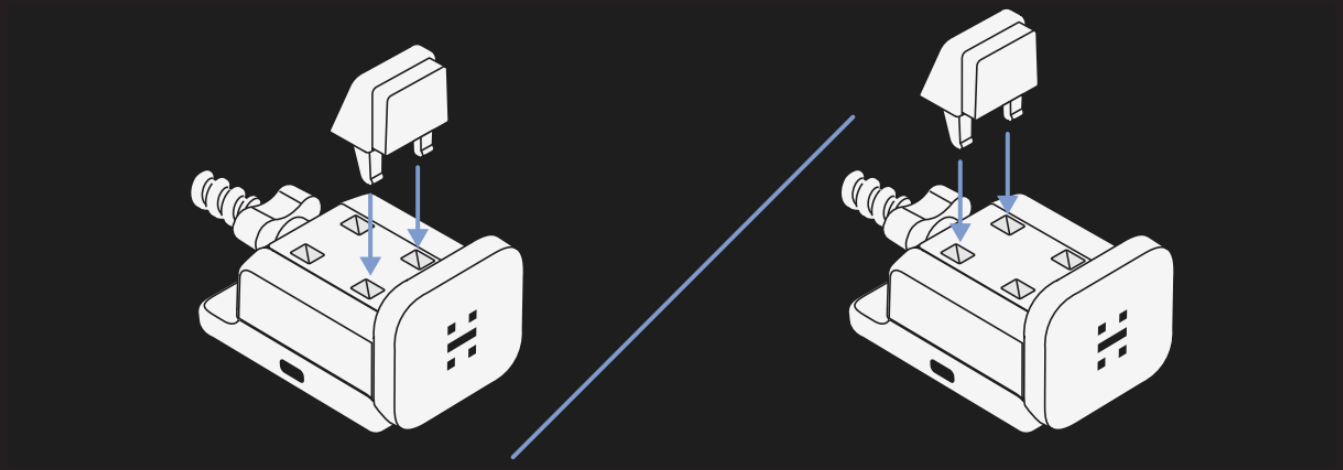

2. Mount camera

Mount camera to the bracket. Gently tighten and align.

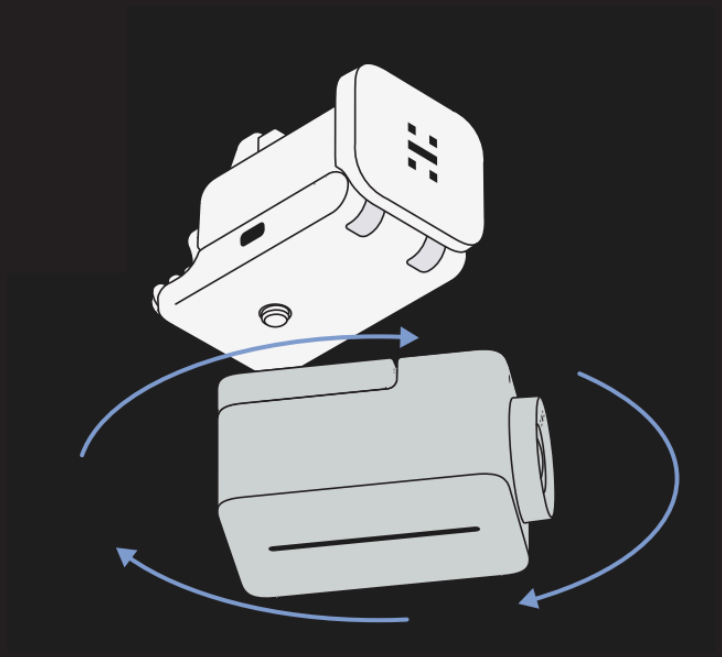

3. Fix bracket to monitor

Tighten clamp to grip screen securely.

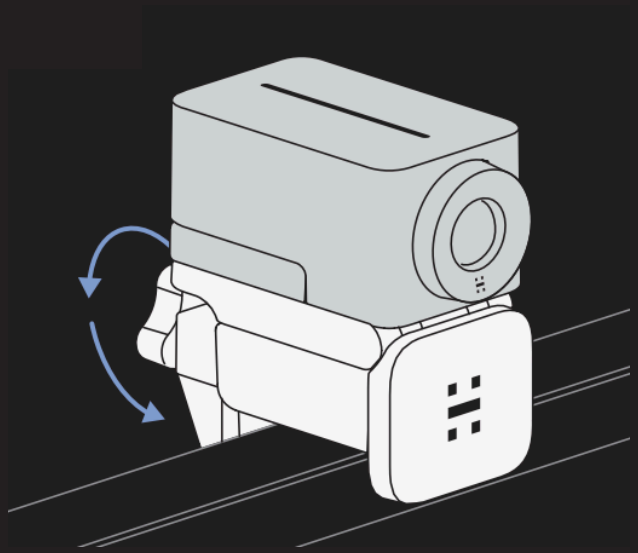

4. Connect

Connect the USB cable.

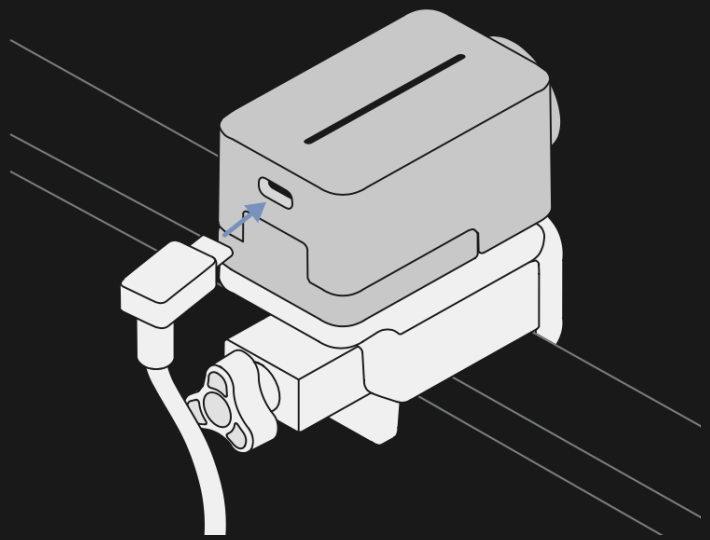

5. Adjust

Adjust camera or bracket if needed.

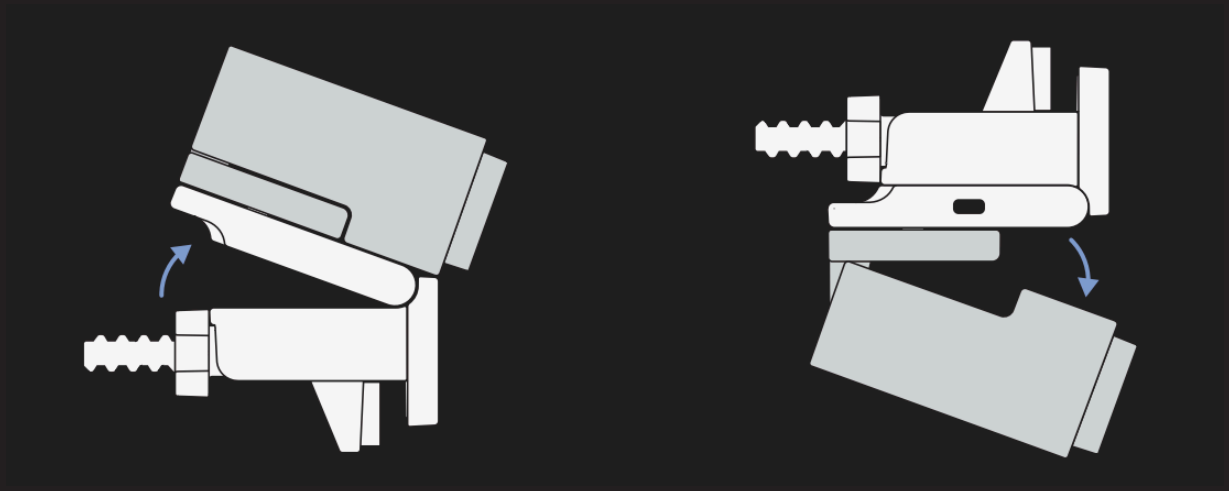

6a Lock

Secure the camera with Kensington lock (optional).

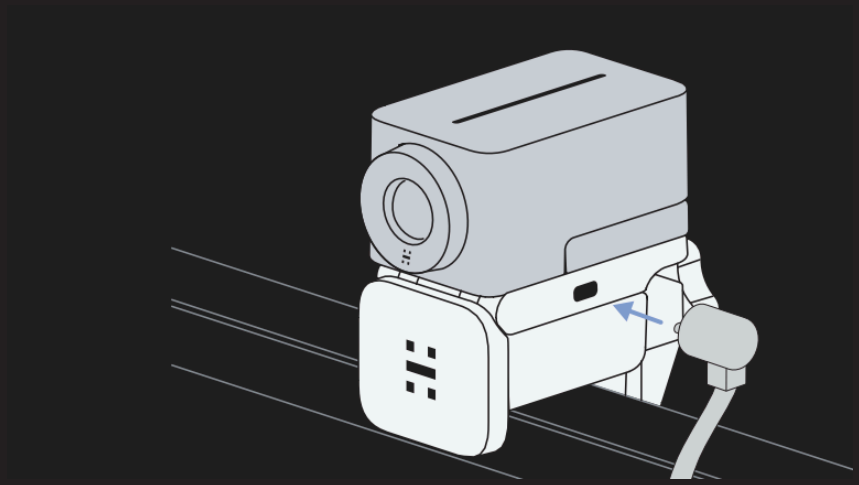

6b Lock

For smaller Kensington locks, use the included washer to secure the camera.

