JBL Commercial Series

CSM 14
CSM 28

Commercial Series Mixer
Operation Manual



Contents

Important Safety Instructions 3
JBL DECLARATION OF CONFORMITY 5
1.0 Welcome 7
1.1 Features 7
1.2 Front Control Panels and Indicators 8
1.3 Rear Panel Controls and Connectors - Four Channel..... 9
1.4 Rear Panel Controls and Connectors - Eight Channel.....10
2.0 Setup 12
2.1 Unpacking Your Unit 12
2.2 Installing Your Unit 12
2.3 Choosing Wire and Connectors 17
2.4 Wiring Your Audio System 18
2.5 Connecting to AC Mains 19
2.6 Startup Procedure 19
3.0 Operation 20
3.1 Precautions 20
3.2 Input Routing 21
3.3 Phantom Power 21
3.4 VOX Ducking 21
3.5 Priority Muting 21
3.6 Remote Volume Control 21
4.0 Troubleshooting 22
Appendix A: Target Performance Specifications 23
Appendix B: Block Diagram 24
Appendix C: Contact Information 26

This manual does not include all of the details of design, production, or variation of the equipment. Nor does it cover every possible situation which may arise during installation, operation or maintenance.

The information provided in this manual was deemed accurate as of the publication date. However, updates to this information may have occured.

Trademark Notice: JBL is registered trademark of JBL International. CROWN and DRIVECORE are registered trademarks of Crown Audio. Other trademarks are the property of their respective owners.

© 2014 JBL Commercial, 8760 South Sandy Parkway, Sandy, UT. All Rights Reserved.

IMPORTANT SAFETY INFORMATION

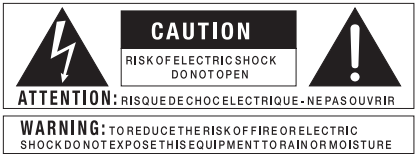

The symbols shown above are internationally accepted symbols that warn of potential hazards with electrical products. The lightning flash with arrowpoint in an equilateral triangle means that there are dangerous voltages present within the unit. The exclamation point in an equilateral triangle indicates that it is necessary for the user to refer to the owner's manual.

These symbols warn that there are no user serviceable parts inside the unit. Do not open the unit. Do not attempt to service the unit yourself. Refer all servicing to qualified personnel. Opening the chassis for any reason will void the manufacturer's warranty. Do not get the unit wet. If liquid is spilled on the unit, shut it off immediately and take it to a dealer for service. Disconnect the unit during storms to prevent damage.

SAFETY INSTRUCTIONS

NOTICE FOR CUSTOMERS IF YOUR UNIT IS EQUIPPED WITH A POWER CORD.

WARNING: THIS APPLIANCE SHALL BE CONNECTED TO A MAINS SOCKET OUTLET WITH A PROTECTIVE EARTHING CONNECTION.

The cores in the mains lead are coloured in accordance with the following code:

GREEN and YELLOW - Earth BLUE - Neutral BROWN - Live

As colours of the cores in the mains lead of this appliance may not correspond with the coloured markings identifying the terminals in your plug, proceed as follows:

- The core which is coloured green and yellow must be connected to the terminal in the plug marked with the letter E, or with the earth symbol, or coloured green, or green and yellow.
- The core which is coloured blue must be connected to the terminal marked N or coloured black.
- The core which is coloured brown must be connected to the terminal marked L or coloured red.

This equipment may require the use of a different line cord, attachment plug, or both, depending on the available power source at installation. If the attachment plug needs to be changed, refer servicing to qualified service personnel who should refer to the table below. The green/yellow wire shall be connected directly to the units chassis.

CONDUCTOR		WIRE COLOUR	
		Normal	Alt
L	LIVE	BROWN	BLACK
N	NEUTRAL	BLUE	WHITE
E	EARTH GND	GREEN/YEL	GREEN

WARNING: If the ground is defeated, certain fault conditions in the unit or in the system to which it is connected can result in full line voltage between chassis and earth ground. Severe injury or death can then result if the chassis and earth ground are touched simultaneously.

WARNING FOR YOUR PROTECTION READ THE FOLLOWING:

KEEP THESE INSTRUCTIONS

HEED ALL WARNINGS

FOLLOW ALL INSTRUCTIONS

THE APPARATUS SHALL NOT BE EXPOSED TO DRIPPING OR SPLASHING LIQUID AND NO OBJECT FILLED WITH LIQUID, SUCH AS VASES, SHALL BE PLACED ON THE APPARATUS

CLEAN ONLY WITH A DRY CLOTH.

DO NOT BLOCK ANY OF THE VENTILATION OPENINGS. INSTALL IN ACCORDANCE WITH THE MANUFACTURER'S INSTRUCTIONS.

DO NOT INSTALL NEAR ANY HEAT SOURCES SUCH AS RADIATORS, HEAT REGISTERS, STOVES, OR OTHER APPARATUS (INCLUDING AMPLIFIERS) THAT PRODUCE HEAT.

ONLY USE ATTACHMENTS/ACCESSORIES SPECIFIED BY THE MANUFACTURER.

UNPLUG THIS APPARATUS DURING LIGHTNING STORMS OR WHEN UNUSED FOR LONG PERIODS OF TIME.

Do not defeat the safety purpose of the polarized or grounding-type plug. A polarized plug has two blades with one wider than the other. A grounding type plug has two blades and a third grounding prong. The wide blade or third prong are provided for your safety. If the provided plug does not fit your outlet, consult an electrician for replacement of the obsolete outlet.

Protect the power cord from being walked on or pinched particularly at plugs, convenience receptacles, and the point where they exit from the apparatus.

Use only with the cart stand, tripod bracket, or table specified by the manufacture, or sold with the apparatus. When a cart is used, use caution when moving the cart/apparatus combination to avoid injury from tip-over. Refer all servicing to to qualified service personnel. Servicing is required when the apparatus has been damaged in any way, such as power-supply cord or plug is damaged, liquid has been spilled or objects have fallen into the apparatus, the apparatus has been exposed to rain or moisture, does not operate normally, or has been dropped.



POWER ON/OFF SWITCH: For products provided with a power switch, the power switch DOES NOT break the connection from the mains.

MAINS DISCONNECT: The plug shall remain readily operable. For rack-mount or installation where plug is not accessible, an all-pole mains switch with a contact separation of at least 3 mm in each pole shall be incorporated into the electrical installation of the rack or building.

FOR UNITS EQUIPPED WITH EXTERNALLY ACCESSIBLE FUSE RECEPTACLE: Replace fuse with same type and rating only.

MULTIPLE-INPUT VOLTAGE: This equipment may require the use of a different line cord, attachment plug, or both, depending on the available power source at installation. Connect this equipment only to the power source indicated on the equipment rear panel. To reduce the risk of fire or electric shock, refer servicing to qualified service personnel or equivalent.

If connected to 240V supply, a suitable CSA/UL certified power cord shall be used for this supply.

IMPORTANT SAFETY INFORMATION

U.K. MAINS PLUG WARNING

A molded mains plug that has been cut off from the cord is unsafe. Discard the mains plug at a suitable disposal facility. NEVER UNDER ANY CIRCUMSTANCES SHOULD YOU INSERT A DAMAGED OR CUT MAINS PLUG INTO A 13 AMP POWER SOCKET. Do not use the mains plug without the fuse cover in place. Replacement fuse covers can be obtained from your local retailer. Replacement fuses are 13 amps and MUST be ASTA approved to BS1362.

ELECTROMAGNETIC COMPATIBILITY

This device complies with part 15 of the FCC Rules and the Product specifications noted on the Declaration of Conformity. Operation is subject to the following two conditions:

- this device may not cause harmful interference, and
- this device must accept any interference received, including interference that may cause undesired operation.

Operation of this unit within significant electromagnetic fields should be avoided.

- use only shielded interconnecting cables.



If you want to dispose this product, do not mix it with general household waste. There is a separate collection system for used electronic products in accordance with legislation that requires proper treatment, recovery and recycling.

Private household in the 25 member states of the EU, in Switzerland and Norway may return their used electronic products free of charge to designated collection facilities or to a retailer (if you purchase a similar new one).

For Countries not mentioned above, please contact your local authorities for a correct method of disposal.

By doing so you will ensure that your disposed product undergoes the necessary treatment, recovery and recycling and thus prevent potential negative effects on the environment and human health.

MAGNETIC FIELD

CAUTION! Do not locate sensitive high-gain equipment such as preamplifiers or tape decks directly above or below the unit. Because this amplifier has a high power density, it has a strong magnetic field which can induce hum into unshielded devices that are located nearby. The field is strongest just above and below the unit.

If an equipment rack is used, we recommend locating the amplifier(s) in the bottom of the rack and the preamplifier or other sensitive equipment at the top.

EC - DECLARATION OF CONFORMITY

Brand: JBL
Equipment Type: Commercial Audio Mixer
Model names: CSM 14, CSM 28

We, Harman International, declare under our sole responsibility that the product, to which this declaration relates, is in conformity with the following standards.

Report No.	Description
EN 55103-1:2009	EMC Compatibility – Product Family Standard for Audio, Video, Audio-Visual and Entertainment Lighting Control Apparatus for Professional Use, Part 1: Emissions
EN 55103-1:2009	Magnetic Field Emissions – Annex A @ 10cm and 20cm
EN 61000-3-2:2005, AMD1:2008, & A2:2009	Limits for Harmonic Current Emissions (equipment input current less than or equal to 16A
EN 61000-3-3:2008	Limitation of Voltage Fluctuations and Flicker in Low-Voltage Supply systems Rated Current less than or equal to 16A
EN 55022:2010	Limits and Methods of Measurement of Radio Disturbance Characteristics of ITE: Radiated & Conducted, Class B Limits
EN 55103-2:2009	EMC Compatibility – Product Family Standard for Audio, Video, Audio-Visual and Entertainment Lighting Control Apparatus for Professional Use, Part 2: Immunity
EN 61000-4-2:2009	Electrostatic Discharge Immunity (Environment E2-Criteria B, 4k V Contact, 8k V Air Discharge)
EN 61000-4-3:2010 Ed 3.2	Radiated, Radio-Frequency, EMC Immunity (Environment E2, Criteria A)
EN 61000-4-4:2007	Electrical Fast Transient/Burst Immunity (Criteria B)
EN 61000-4-5:2006	Surge Immunity (Criteria B)
EN 61000-4-6:2006	Immunity to Conducted Disturbances Induced by Radio-Frequency Fields (Criteria A)
EN 61000-4-11:2004	Voltage Dips, Short Interruptions and Voltage Variation

Safety Standard:	
IEC 60065:2001 – 7th Ed., AMD1:2005, & AMD2:2010	Safety Requirements – Audio, Video, and Similar Electronic Apparatus

Due to line current harmonics, we recommend that you contact your supply authority before connection.

We certify that the product identified above conforms to the requirements of the EMC Council Directive 89/336/EEC as amended by 92/31/EEC, and the Low Voltage Directive 73/23/EEC as amended by 93/68/EEC.

European Representative's Name and Address:

David Budge
10 Harvest Close
Yateley, GU46 6YS
United Kingdom

Responsible for the technical documentation is:

Wilson Zhou
Wilson.Zhou@harman.com

1.0 Welcome

The JBL® Commercial Series Mixers are professional tools designed and built for Installed sound applications. There are both single channel and two channel models with four or eight mixer channels, respectively. They provide mixer capability with independent level control for each input channel.

The product includes a rack mounting kit for installations to a cabinet. The system can be easily expanded with additional JBL Commercial Series Amplifiers and Commercial Series Mixer-amplifiers. Provisions are included for a remote volume control using the JBL CSR-V control module.

1.1 Features

- 4 or 8 inputs with 1 or 2 outputs, respectively
- Ideal for commercial and industrial use
- System may be expanded by adding JBL Commercial Series Mixer-amplifiers or Commercial Series Amplifiers.
- Euro-block type mic/line input connectors and output connectors
- Independent Bass and Treble controls for each output channel
- VOX ducking during announcements
- Remote volume control capability using JBL CSR-V module and standard ethernet cable
- Priority muting using PTT switch closure
- Configurable output routing
- Soft mute for quiet power on/off
- 3-Year Warranty*

*Warranty is only valid within the United States of America. For information on Warranty outside of the U.S.A., please contact your local distributor.

1.2 Front Panel Controls and Indicators

Figure 1.2 Front View

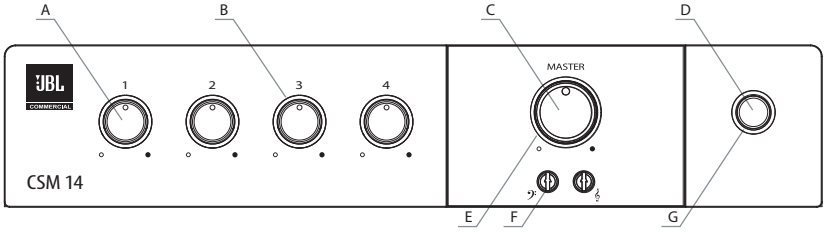

A. Input Level Controls

B. Input signal presence is indicated by green illumination of the ring around the input level controls

C. Output Volume Controls

D. Power Switch

E. Illuminated ring around the output volume control will light green with signal presence while red indicates clipping, i.e. the signal has reached the threshold of audible distortion.

F. Tone Controls - Bass 𝄢 and Treble 𝄞 potentiometers on each output channel.

G. Illuminated ring around the power switch. Green indicates that the unit is connected to the AC mains and is in standby. Blue indicates that the unit is on and in normal operating mode.

1.3 Rear Panel Controls and Connectors - Four Channel

Figure 1.3 Rear View - CSM 14

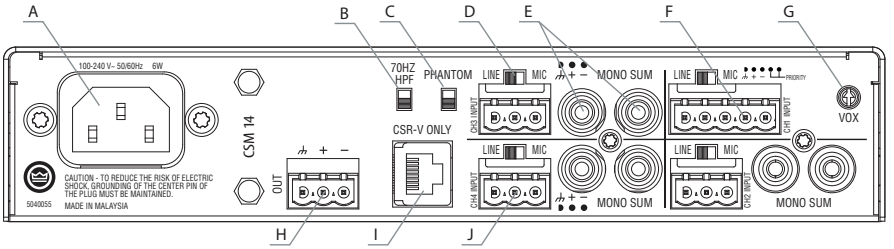

A. AC Power Inlet – Detachable IEC

B. 70Hz HPF Switch - Activates this function to allow frequencies above 70Hz pass through and reduce signals with lower frequency.

C. Phantom Power Switch - Applies 27V phantom power source for microphones.

D. Mic/Line Selection Switch - Allows user to select the gain depending upon the source used.

E. Dual RCA Input Connector - Stereo, unbalanced sources will be summed together. (Ch2-4)

F. Priority Input Connector - 5-pin Euro-block includes 3 pins for a balanced input as well as two pins that, when shortened together, activates the priority function. (Ch1)

G. VOX Adjustment - allows the input level to be set that will invoke priority override. (Ch1)

H. Line Level Output Connector

I. Remote Volume connector – RJ45 style connector to connect to a JBL CSR-V control module.

J. Mic/Line Input Connector - 3-pin Euro-block connector, balanced input (Ch 2-4)

1.4 Rear Panel Controls and Connectors - Eight Channel

Figure 1.4 Rear View - CSM 28

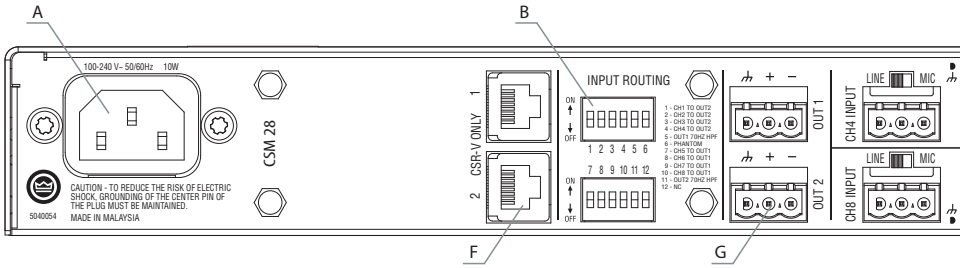

A. AC Power Inlet – Detachable IEC

B. Dip switches for input routing and phantom power.

C. Mic/Line Selection Switch – Allows the user to select the gain depending upon the source used.

D. Dual RCA Input Connector – Stereo, unbalanced sources will be summed together. (Ch 2-8)

E. Priority Input Connector – 5-pin Euro-block includes 3 pins for a balanced input as well as two pins that, when shorted together, activates the priority function. (Ch 1 & 5)

F. Remote Volume Control – RJ45 style connector to connect to a JBL CSR-V control module.

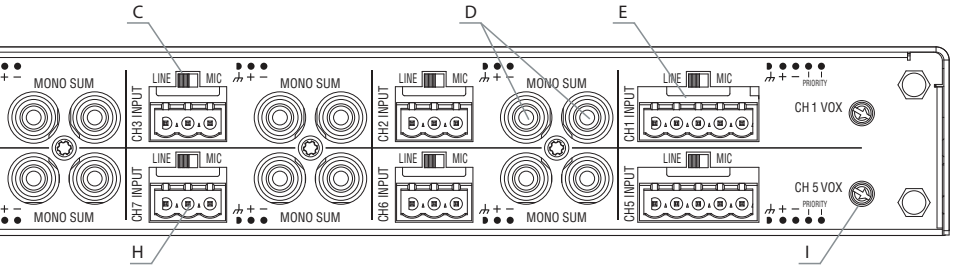

G. Line Out – Line level output connector for each output channel.

H. Mic/Line Input Connector – 3-pin Euro-block connector for a balanced input source. (Ch 2-4 & 6-8)

I. VOX Adjustment – Allows the input level to be set that will invoke priority override. (Ch 1 & 5)

2.0 Setup

2.1 Unpacking Your Unit

Please unpack and inspect your unit for any damage that may have occurred during transit. If damage is found, notify the transportation company immediately. Only you can initiate a claim for shipping damage. We will be happy to help as needed. Save the shipping carton as evidence of damage for the shipper's inspection.

We also recommend that you save all packing materials so you will have them if you ever need to transport the unit. Never ship the unit without the factory pack.

WARNING: Before you start to set up your unit, make sure you read and observe the Important Safety Instructions found at the beginning of this manual.

2.2 Installing Your Unit

CAUTION: Before you begin, make sure your unit is disconnected from the power source and all level controls turned completely down (counterclockwise).

To install the unit, you can use one of the following approaches:

- Rack mount the unit with the rack mounting kit, see Figure 2.2.2.
- Place a single unit on a surface with 12 inches of air space around the unit for convection cooling. Rubber feet are included and can be attached onto the underside of the chassis. For product dimensions, see Figure 2.2.1.

Figure 2.2.1 Dimensions

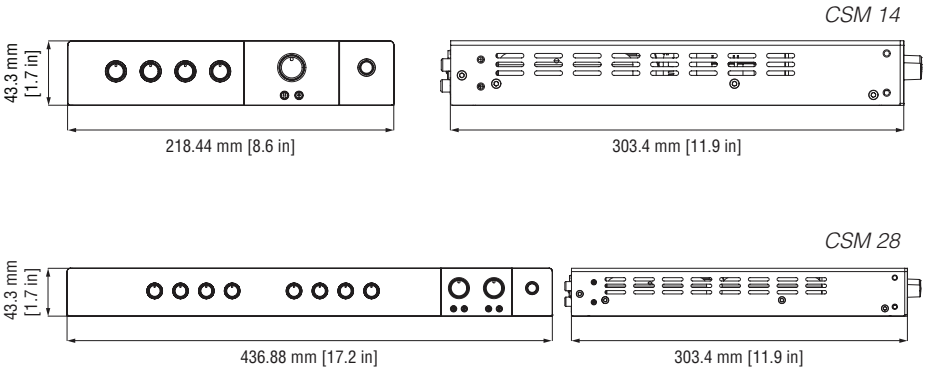

Figure 2.2.2 Mounting Kit

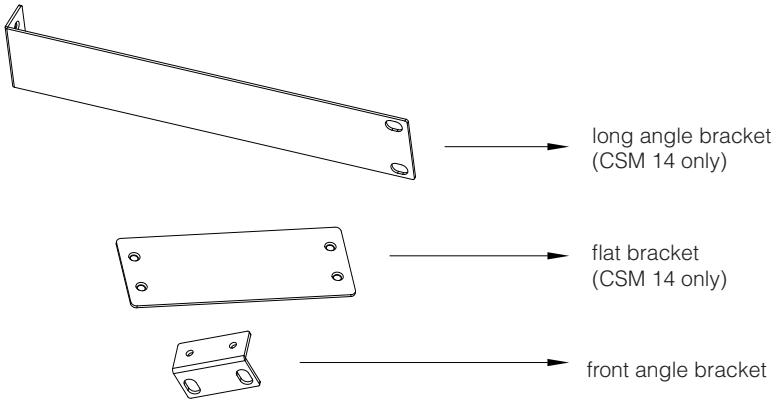

Figure 2.2.3 Rack Mounting Two Half-rack Mixers

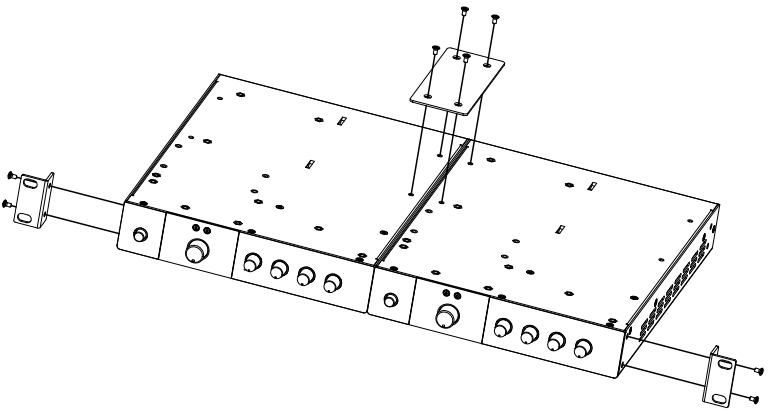

Solution A: Rack Mounting Two Half-rack Mixers

To install two half-rack width units in your cabinet system, refer to Figure 2.2.3 and follow the steps below:

1. Align two modules side by side and upside down with the front panel towards the same direction.
2. Connect them with the flat bracket using the screws provided.
3. Attach the front angle brackets to each side of the front of the assembly using the screws provided.
4. Install the assembly into the cabinet using the rack mount screws through the front angle brackets. For details of installation in the chassis of the cabinet, refer to the user guide of your cabinet.

Figure 2.2.4 Rack Mounting A Single Half-rack Mixer

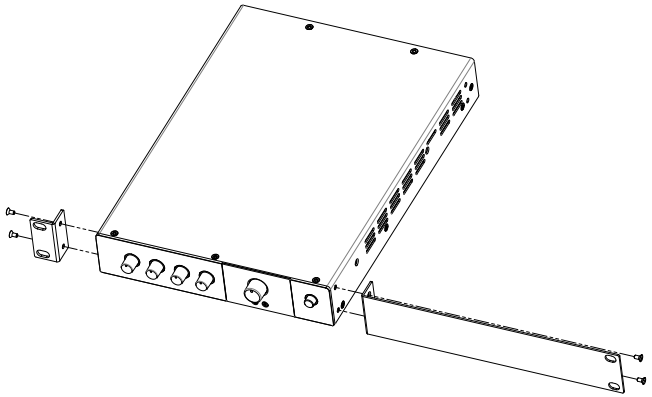

Solution B: Rack Mounting A Single Half-rack Mixer

To install a single half-rack unit, refer to Figure 2.2.4 and follow the steps below:

1. Determine which side of the rack opening will be used for the mixer and attach the long angle bracket to the other side at the front using the screws provided.
2. Attach the front angle brackets to the other side of the assembly, as shown in the diagram, with the screws provided.
3. Install the assembly into the cabinet using the rack mount screws through the front angle brackets. For details of installation in the chassis of the cabinet, refer to the user guide of your cabinet.

Figure 2.2.5 Rack Mounting A Full-rack Mixer

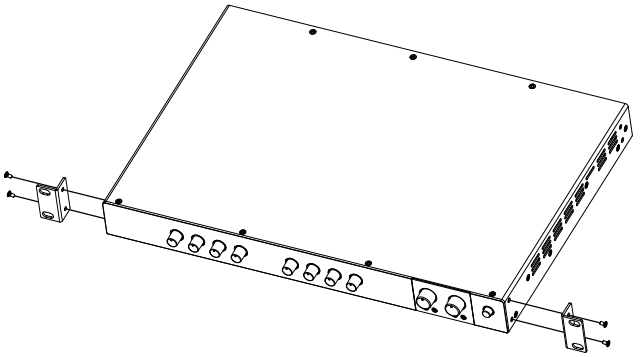

Solution C: Rack Mounting Full Rack Mixer

To install a full-rack width unit, refer to Figure 2.2.5 and follow the steps below:

1. Attach the front angle brackets to each side of the front of the unit using the screws provided.
2. Install the unit into the cabinet using the rack mount screws through the front angle brackets. For details of installation in the chassis of the cabinet, refer to the user guide of your cabinet.

Figure 2.3 Input and Output Wiring

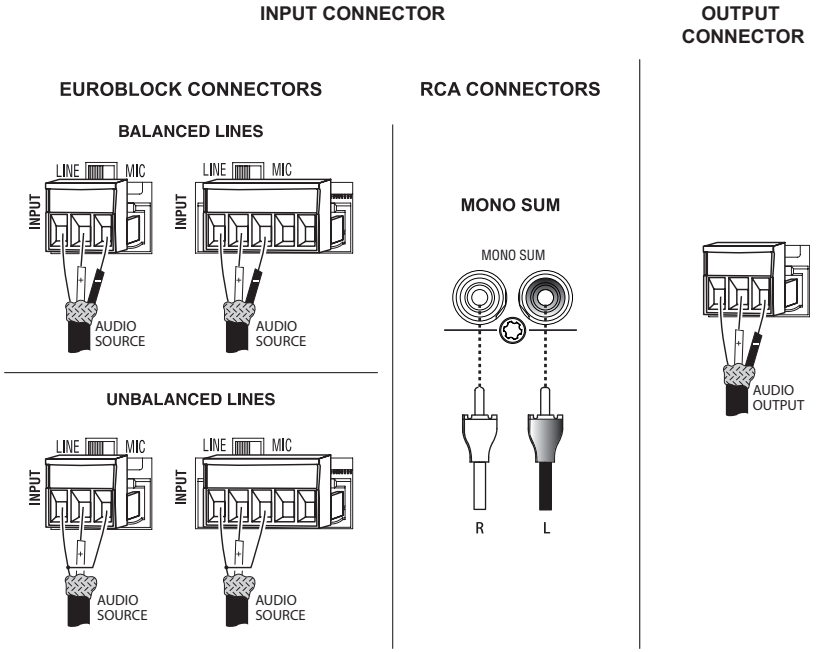

Note: *Two RCA connectors are provided for summing left and right channels from a stereo source. Do not use both Euroblock and RCA connectors concurrently for any single input channel.*

2.3 Choosing Wire and Connectors

We recommend using pre-built or professionally wired balanced line (two-conductor plus shield) 22-24 gauge cables to connect the balanced input by using the included Euroblock connectors, see Figure 2.3. Unbalanced lines may be used, but may result in hum or RF noise very long cable runs.

You can also use RCA connectors to connect audio devices, for example, CD/DVD player. However, do not use both Euroblock and RCA audio input connectors on a single channel at the same time.

NOTE: Custom wiring should only be performed by qualified personnel.

Figure 2.4 Wiring Audio System

Professional audio system

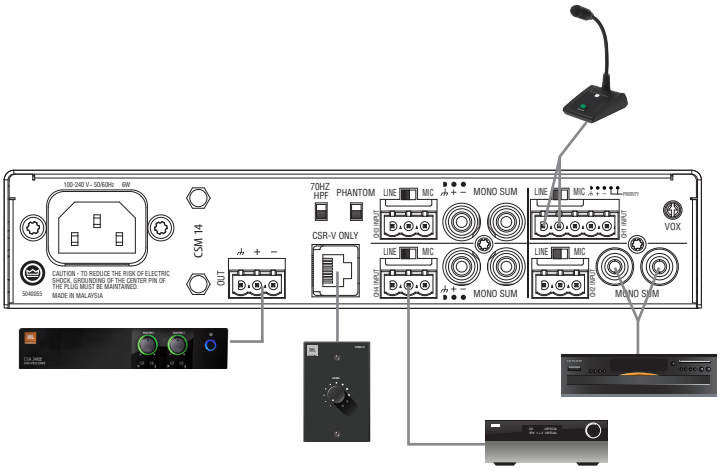

2.4 Wiring Your Audio System

Typical input and output wirings are shown in Figure 2.4.

INPUTS: Connect input wiring for both channels using either the RCA or the Euroblock input for each channel.

OUTPUTS: The mixer's line level output may be connected to the input of a power amplifer such as a JBL Commercial Series Amplifer.

2.5 Connecting to AC Mains

Connect your mixer to the AC mains power source (power outlet) with the supplied AC power cord. First, connect the IEC end of the cord set to the IEC connector on the mixer; then, plug the other end of the cord set to the AC mains. When properly connected to a live power source, the power ring should illuminate with a green color.

WARNING: The third prong of this connector (ground) is an important safety feature. Do not attempt to disable this ground connection by using an adapter or other methods.

2.6 Startup Procedure

Use the following procedure when first turning on your system:

1. Turn down the level of your audio source.
2. Turn down the level controls of the amplifier.
3. Power up the mixer. The Power ring should change from green to blue.
4. Power up the amplifier that is connected to the mixer output.
5. Turn up the level of your audio source to an optimum level.
6. Turn up the level of your mixer to an optimum level.
7. Turn up the Level controls on the amplifier until the desired loudness or power level is achieved.

If you ever need to make any wiring or installation changes, don't forget to disconnect the power cord.

Note: To avoid pop noises when powering down your system, it is recommended that the amplifier used to drive the loudspeakers be turned off before the other system components.

3.0 Operation

3.1 Precautions

Your unit is protected from internal and external faults, but you should still take the following precautions for optimum performance and safety:

1. Before use, your unit first must be configured for proper operation, including input and output wiring hookup. Improper wiring can result in serious operating difficulties.

   For information on wiring and configuration, please consult the Setup section of this manual.
2. Use care when making connections, selecting signal sources and controlling the output level.
3. Always be sure to have all levels at minimum when connecting or disconnecting audio sources from the inputs, especially when MIC is selected from the MIC/LINE switch. Failure to do so may cause the amplifier or speaker to go into a protection mode or even cause damage.
4. WARNING: Never connect the output to a power supply, battery or power main. Electrical shock may result.
5. Tampering with the circuitry, or making unauthorized circuit changes may be hazardous and invalidates all agency listings.
6. Do not operate the unit with the red Clip LEDs constantly flashing.
7. Do not overdrive the unit, which will cause clipped signal to be sent to the unit. Such signals will be reproduced with extreme accuracy, and loudspeaker damage may result.
8. Use the unit in a well-ventilated environment and do not use it in ambient temperature conditions in excess of 40°C.

CAUTION: JBL is not liable for damage that results from overdriving other system components.

3.2 Input Routing

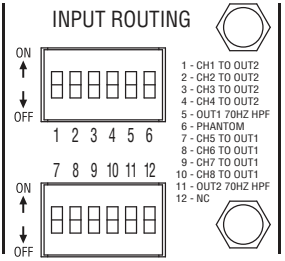

CSM 28 include a default routing of input channels 1-4 to output 1 and input channels 5-8 to output 2. The user may also take any input and have it routed to both outputs by selecting the appropriate switch. For example, if you set switch 1 to ON, it will be routed to both OUT1, and OUT2.

3.3 Phantom Power

Phantom power (27V) can be applied to all mic inputs by turning on the Phantom Power switch on CSM 14 units or DIP switch #6 on CSM 28 units.

3.4 VOX Function

Voice activated ducking is available on input channel 1 of CSM 14 units and for both input channels 1 and 5 of CSM 28, The audio input level required to activate ducking is set using the trim pot on the rear panel. Adjusting in the counter-clockwise direction will reduce that level while the full clockwise setting will disable the VOX function.

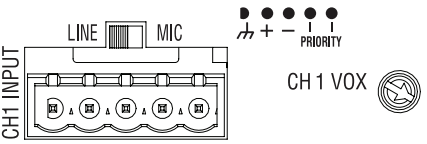

3.5 Priority Muting

With CSM 14 Input Channel 1 may be used as a priority channel, muting all other channels when pin 4 and pin 5 are shorted using a switch closure.

CSM 28 units let Input Ch1 operate with priority over all inputs into OUT 1. Ch1 will have priority over both OUT 1 and OUT 2 if the routing DIP switch #1 is set to ON. Ch5, however, cannot have priority over the OUT 1 inputs.

3.6 Remote Volume Control

Remote volume control can be implemented using a CSR-V controller connected via an ethernet cable to the RJ45 connector on the back panel. For CSM 28 units, there are two connectors, one for each output.

4.0 Troubleshooting

CONDITION: No power to the mixer so that the power ring is not illuminated.

POSSIBLE REASON: The mixer is not plugged into the power receptacle.

CONDITION: No sound or low sound.

POSSIBLE REASON: The input signal is not present or at a very low level.

POSSIBLE REASON: The Master Volume control is turned down.

POSSIBLE REASON: A CSR-V is connected and turned down.

POSSIBLE REASON: Mixer channel inputs are turned down.

POSSIBLE REASON: The Ch 1 Priority switch is closed, muting all except Ch 1 input.

POSSIBLE REASON: The power switch is OFF. (Note that while plugged in, the unit will be in standby mode and the power ring will be green until the power switch is activated and the power ring will turn blue.)

CONDITION: Distorted sound.

POSSIBLE REASON: Input signal level is too high. Please turn down the input level controls. Note that the mixer should not be operated at a level that allows the clip indicator (red ring around the Master Volume) to be constantly ON.

POSSIBLE REASON: Master Volume is too high.

POSSIBLE REASON: MIC/LINE switch is in MIC position when using a line level source.

Appendix A: Target Performance Specifications

Performance	CSM 14	CSM 28
Number of Input Channels	4	8
Number of Output Channels	1	2
Line Output level	$5.0V_{rms}$ into 10kΩ	
Input Sensitivity to obtain $5V_{rms}$ to line out	Mic Input: $3mV_{rms}$ Line Input: 775 mV_{rms} RCA Input: $300mV_{rms}$	
Frequency Response	20Hz - 20kHz, +/-1dB	
Total Harmonic Distortion (THD) (measured with $5V_{rms}$ at output)	0.05% typical	
Signal-to-Noise Ratio (Ref. $5V_{rms}$ from Output, mixer levels at min, master volume at max, A-weighted)	>90dB	
Input Impedance (nominal)	Mic: 400 Ω Line: 20KΩ (Balance) RCA: 50KΩ	
Phantom Power	+27VDC	
Crosstalk (Ref. $5V_{rms}$ from Output, Volume at mid position, A-weighted, 1kHz)	>70 dB	
Tone Controls (Bass and Treble non-detented potentiometers on each channel)	Bass +/-10dB @ 100Hz Treble +/-10dB @10KHz	
Nominal AC Line Voltages	100-240V, 50/60 Hz	
Operating Temperature/Humidity	0°C to 40°C @ 95% R.H. (non-condensing)	
Storage Temperature	-20°C to 85°C	
Dimensions & Weight		
Net Weight (preliminary estimate)	4.3 lb (2.0 kg)	7.5 lb (3.4 kg)
Dimensions	Width: 8.6 in. (218.5 mm) Depth: 11.9 in. (303.4 mm) Height: 1.7 in. (43.3 mm)	Width: 17.2 in. (437 mm) Depth: 11.9 in. (303.4 mm) Height: 1.7 in. (43.3 mm)
Shipping Weight	6.9 lb (3.1 kg)	10.8 lb (4.9 kg)

Note: For AC power draw and thermal dissipation information, please visit our website. ***www.jblcommercialproducts.com***

Appendix B : Block Diagram

CSM 28 Block Diagram

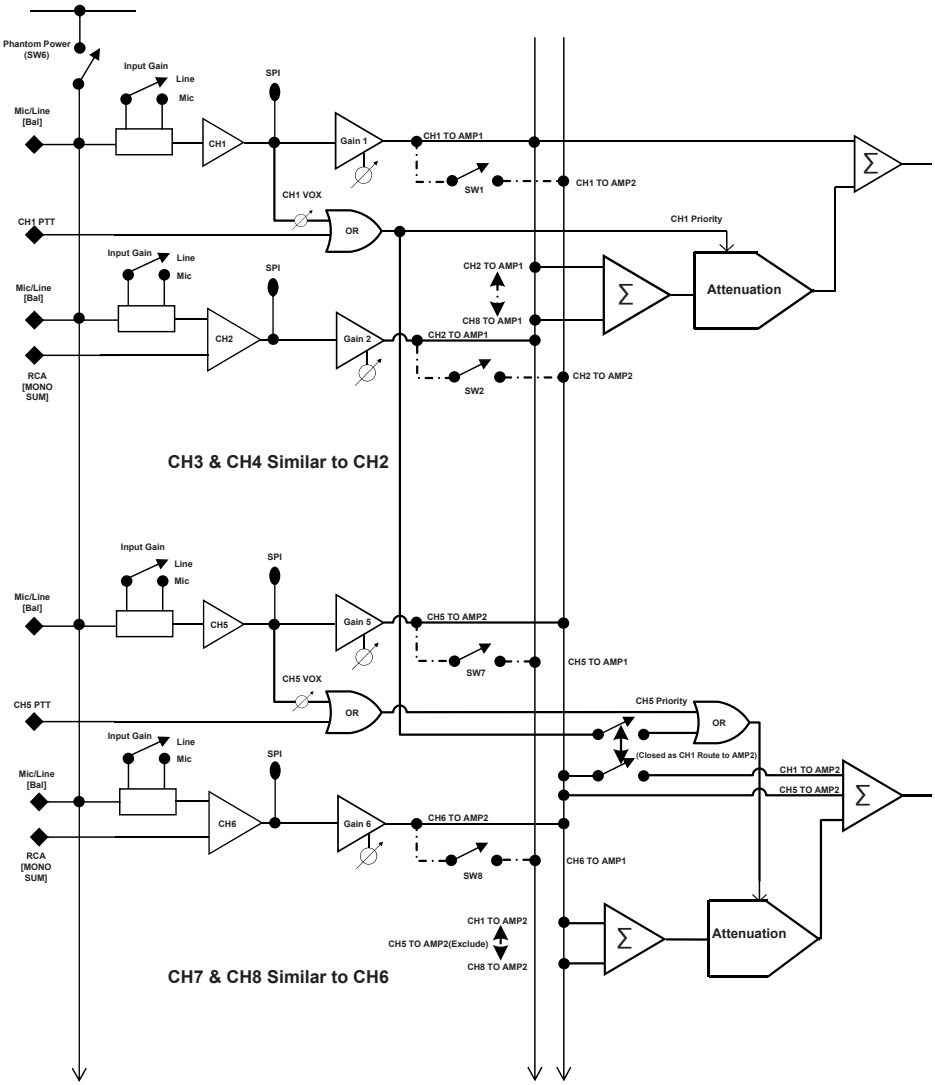

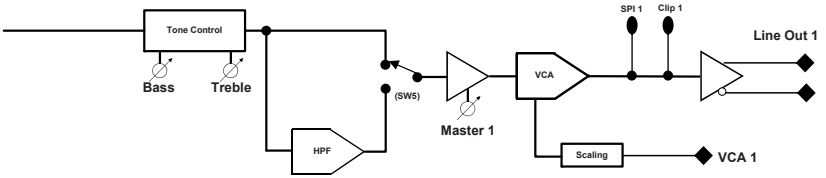
Tone Control
Bass
Treble
HPF
(SW5)
Master 1
VCA
SPI 1
Clip 1
Line Out 1
Scaling
VCA 1

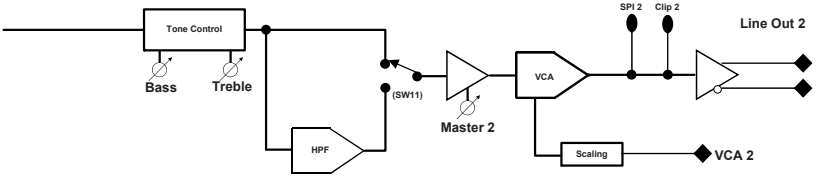
Tone Control
Bass
Treble
HPF
(SW11)
Master 2
VCA
SPI 2
Clip 2
Line Out 2
Scaling
VCA 2

Appendix C: Contact Information

For additional information, please consult JBL Professional Customer Service, your system installer or retailer.

On The World Wide Web:
www.jblcommercialproducts.com

Professional Contacts, Outside the USA:
Contact the JBL Professional Distributor in your area. A complete list of JBL Professional international distributors is provided at our U.S.A. Website: www.jblpro.com



JBL Commercial
8760 South Sandy Pkwy.
Sandy, UT 84070 USA
(801) 566-8800

Part Number: 5040964 Issue: 01/14